UNSHIELDED RADIAL POWER INDUCTOR

P11R20875 SERIES



- Low cost, high current
- Inductance range from 10 - 10,000 µH
- Open construction
- Optional inductance tolerance: K = ±10% (add suffix letter for tolerance after the part number)
- Operating temperature range: -40°C to +85°C
- RoHS compliant product

ELECTRICAL SPECIFICATION @ 25°C

Part Number P11R20875-	Inductance (µH) (±20%)	DCR (Ω) (Max)	RATED I_{DC} (A)
100	10	0.05	2.90
120	12	0.06	2.50
150	15	0.07	2.20
180	18	0.08	1.90
220	22	0.09	1.80
270	27	0.11	1.70
330	33	0.13	1.50
390	39	0.14	1.30
470	47	0.15	1.30
560	56	0.18	1.20
680	68	0.20	1.10
820	82	0.24	1.00
101	100	0.35	0.89
121	120	0.36	0.81
151	150	0.42	0.72
181	180	0.57	0.66
221	220	0.63	0.57
271	270	0.88	0.51
331	330	1.05	0.46
391	390	1.17	0.44
471	470	1.34	0.41
561	560	1.72	0.36
681	680	1.96	0.33
821	820	2.56	0.30
102	1000	2.94	0.27

- Inductance measured: 1KHz, 0.30V_{RMS}
- I_{RATED}: Max 10% inductance drop and ΔT=40°C Temp Rise

Dimensions
Unless otherwise specified, all tolerances are:
inch: .XX : ±0.015 .XXX : ±0.004
mm: X,X : ±0,38 X,XX : ±0,10

Product performance is limited to specified parameters. Data is subject to change without prior notice.

13200 Estrella Ave., Bldg. B
Gardena, CA 90248
Tel: 310-325-1043
Fax: 310-325-1044
www.mpsind.com
sales@mpsind.com

UNSHIELDED RADIAL POWER INDUCTOR

P11R20875 SERIES

ELECTRICAL SPECIFICATION @ 25°C

Part Number P11R20875-	Inductance (µH) (±20%)	DCR (Ω) (Max)	RATED I_{DC} (A)
122	1200	4.04	0.24
152	1500	4.70	0.22
182	1800	5.05	0.20
222	2200	6.25	0.18
272	2700	8.72	0.16
332	3300	10.6	0.15
392	3900	14.2	0.14
472	4700	16.7	0.12
562	5600	18.7	0.11
682	6800	21.8	0.10
822	8200	28.7	0.093
103	10000	33.0	0.084

- Inductance measured: 1KHz, 0.30V_{RMS}
- I_{RATED}: Max 10% inductance drop and ΔT=40°C Temp Rise

DIMENSIONS

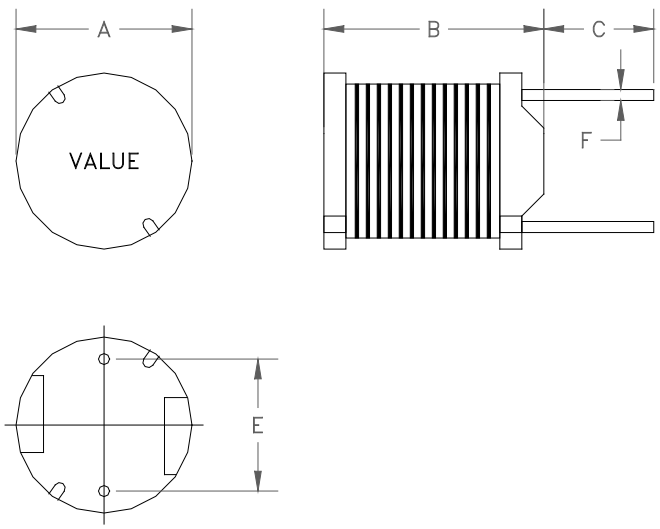

A = 8.3 max	mm
B = 7.5 max	mm
C = 20.0 ± 2.0	mm
E = 5.0 ± 0.5	mm
F = 0.6 ± 0.1	mm

Dimensions
Unless otherwise specified, all tolerances are:
inch: .XX : ±0.015 .XXX : ±0.004
mm: X,X : ±0,38 X,XX : ±0,10

Product performance is limited to specified parameters. Data is subject to change without prior notice.

13200 Estrella Ave., Bldg. B
Gardena, CA 90248
Tel: 310-325-1043
Fax: 310-325-1044
www.mpsind.com
sales@mpsind.com