SMT POWER INDUCTORS
Toroid - Tomcat Series

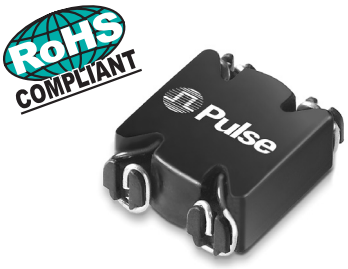

- **Height:** 7.6mm Max
- **Footprint:** 18.2mm x 15.0mm Max
- **Current Rating:** up to 14.4A
- **Inductance Range:** 1.5µH to 139µH

Electrical Specifications @ 25°C — Operating Temperature -40°C to +130°C [10]

Part Number [8,9]	Inductance @ Irated (µH)	Irated (A)	DCR (TYP) (mΩ)	ET (V-µsec)	Storage Capacity (µJoules)	Inductance @ 0ADC (µH ±20%)	100 Gauss ET_{100} (V-µsec)	1 Amp DC H_1 (Orsted)	Connection
P0395NL	1.5	14.40	4.41	4.80	159.01	2.2	1.71	3.77	Parallel
P0396NL	2.4	11.20	6.54	6.00	152.83	3.5	2.14	4.71	Parallel
P0397NL	4.2	8.20	10.47	7.85	142.57	5.9	2.78	6.12	Parallel
P0398NL	5.8	6.80	14.94	9.05	133.80	7.9	3.21	7.06	Parallel
P0395NL	6.1	7.20	17.60	9.60	159.01	9.0	3.42	7.53	Series
P0399NL	7.6	5.70	20.99	10.25	124.18	10.1	3.64	8.00	Parallel
P0396NL	9.7	5.60	26.20	12.00	152.83	14.0	4.28	9.42	Series
P0400NL	12.1	5.40	23.24	13.85	176.62	18.5	4.92	10.83	Parallel
P0397NL	17.0	4.10	41.90	15.70	142.57	23.7	5.56	12.24	Series
P0401NL	18.0	4.40	38.15	16.50	174.26	27.4	5.99	13.18	Parallel
P0398NL	23.1	3.40	59.70	18.10	133.80	31.5	6.42	14.12	Series
P0402NL	27.0	3.54	53.21	20.50	169.14	40.5	7.27	16.01	Parallel
P0399NL	30.6	2.85	84.00	20.50	124.18	40.5	7.27	16.01	Series
P0403NL	34.8	3.00	73.89	22.50	156.47	50.5	8.13	17.89	Parallel
P0400NL	48.5	2.70	93.00	27.70	176.62	74.1	9.84	21.66	Series
P0401NL	72.0	2.20	152.60	33.00	174.26	109.8	11.98	26.36	Series
P0403NL	139.1	1.50	295.60	45.00	156.47	202.2	16.26	35.78	Series
P0402NL	108.0	1.77	212.80	41.00	169.14	161.8	14.55	32.01	Series

NOTES:
1. The reference inductance is a typical value at the AC and DC excitation listed.
2. Temperature rise is 55°C in typical buck or boost circuits at 100kHz and with the reference ET applied to the inductor.
3. Total loss in the inductor is 634mW for a 55°C temperature rise above ambient.
4. To estimate temperature rise in a given application, determine copper and core losses, divide by 634 and multiply by 50.
5. For the copper loss (mW), calculate $I_{DC}{}^2 X R_N$.
6. For core loss (mW), using frequency (f in Hertz) and operating flux density (B in Gauss), calculate $2.24 \times 10^{-10} \times B^{2.11} \times f^{1.26}$.
7. For flux density (B in Gauss), calculate ET (V-µsec) for the application, divide by ET_{100} from the table, and multiply by 100.
8. Optional Tape & Reel packaging can be ordered by adding a "**T**" suffix to the part number (i.e. P0395NL becomes P0395NL**T**). Pulse complies to industry standard tape and reel specification EIA481.
9. The "**NL**" suffix indicates an RoHS-compliant part number. Non-NL suffixed parts are not necessarily RoHS compliant, but are electrically and mechanically equivalent to NL versions. If a part number does not have the "**NL**" suffix, but an RoHS compliant version is required, please contact Pulse for availability.
10. The temperature of the component (ambient plus temperature rise) must be within the stated operating temperature range.

Mechanical

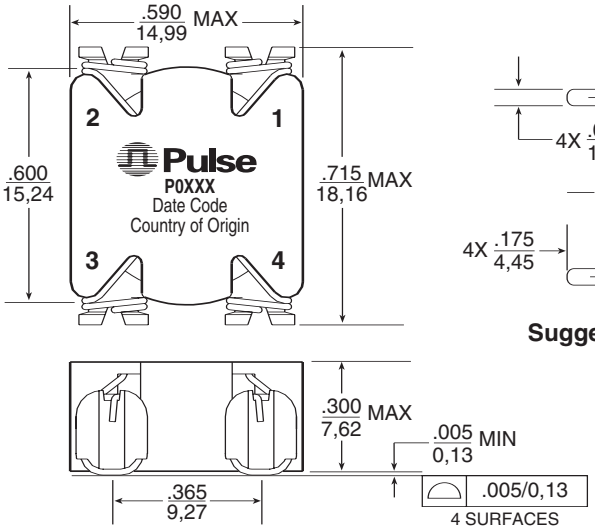

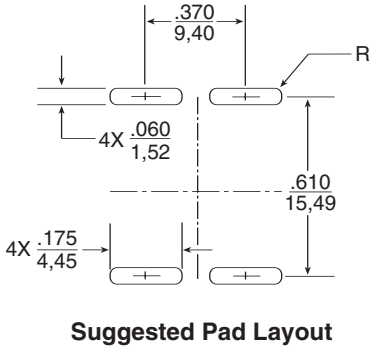

Suggested Pad Layout

Schematic

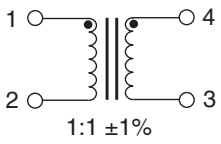

Weight . . . . . 4.2 grams
Tape & Reel 300/reel
Tube 35/tube

Dimensions: Inches / mm

Unless otherwise specified, all tolerances are ± .010 / 0,25

Mouser Electronics

Authorized Distributor

Click to View Pricing, Inventory, Delivery & Lifecycle Information:

Pulse:

P0401T P0402 P0403 P0403T P0395 P0395T P0396 P0396T P0397 P0398 P0399 P0400 P0400T
P0395NL P0396NL P0396NLT P0403NL P0398NL P0398NLT P0399NL P0399NLT P0400NL P0400NLT
P0401NL P0401NLT P0403NLT P0399T P0397NLT P0402NLT P0397NL P0402NL P0395NLT