ShenZhen HuaXinAn Electronics Co.,Ltd (PXXX0SCMCLRP)

SIDACtor Protection Thyristors Package DO-214AA

Description

Fast Delivery Time

PXXX0SCMCLRP Series are micro capacitance SIDACtor Protection Thyristor designed to protect telecommunications equipment such as ADSL Modems,Router, , Telephone, CCTV Camera,Digital Video Record,Video Capture Card,Twisted-pair video transmitter,CATV Splitter.....Etc.



PXXX0SCMCLRP Series SIDACtor Protection Thyristor are used to enable equipment to meet various regulatory requirements including GR 1089, ITU K.20/21,IEC 61000-4-5, YD/T 1082,YD/T 993,YD/T 950,TIA-968-A ,TIA-968-B

Features

Compared to surge suppression using other technologies, PXXX0SCMCLRP Series devices offer absolute surge protection regardless of the surge current available and the rate of applied voltage (dv/dt). PXXX0SCMCLRP Series devices:

- **100% Lead-Free(RoHs Compliant)**
- **Cannot be damaged by voltage**
- **Eliminate hysteresis and heat dissipation typically found with clamping devices**
- **Eliminate voltage overshoot caused by fast-rising transients**
- **Are non-degenerative**
- **Have low capacitance, making them ideal for high-speed transmission equipment**

Electrical Characteristics

Parameter	Definition
V_{DRM}	**Peak Off-state Voltage** — maximum voltage that can be applied while maintaining off state
V_S	**Switching Voltage** — maximum voltage prior to switching to on state
I_H	**Holding Current** — minimum current required to maintain on state
I_S	**Switching Current** — maximum current required to switch to on state
I_T	**On-state Current** — maximum rated continuous on-state current
V_T	**On-state Voltage** — maximum voltage measured at rated on-state current
Capacitance	**Off-state Capacitance** — typical capacitance measured in off state
I_{DRM}	**Leakage Current** — maximum peak off-state current measured at V_{DRM}
I_{PP}	**Peak Pulse Current** — maximum rated peak impulse current
I_{TSM}	**Peak One-cycle Surge Current** — maximum rated one-cycle AC current
di/dt	**Rate of Rise of Current** — maximum rated value of the acceptable rate of rise in current over time

Electrical Characteristics

Part Number	Marking	V_{DRM} @I_{DRM}=5 μ A	V_S @100V/μs	I_H	I_S	I_T	V_T @I_T=2.2Amps	Capacitance @1MHz,2V bias
		V min	V max	mA min	mA max	A max	Vmax	pF
P0080SCMCLRP	P008C	6	25	50	800	2.2	4	50
P0300SCMCLRP	P03C	25	40	50	800	2.2	4	45
P0640SCMCLRP	P06C	58	77	150	800	2.2	4	45
P0720SCMCLRP	P07C	65	88	150	800	2.2	4	45
P0900SCMCLRP	P09C	75	98	150	800	2.2	4	50
P1100SCMCLRP	P11C	90	130	150	800	2.2	4	45
P1300SCMCLRP	P13C	120	160	150	800	2.2	4	70
P1500SCMCLRP	P15C	140	180	150	800	2.2	4	40
P1800SCMCLRP	P18C	170	220	150	800	2.2	4	40
P2100SCMCLRP	P21C	180	240	150	800	2.2	4	65
P2300SCMCLRP	P23C	190	260	150	800	2.2	4	50
P2600SCMCLRP	P26C	220	300	150	800	2.2	4	50
P3100SCMCLRP	P31C	275	350	150	800	2.2	4	40
P3500SCMCLRP	P35C	320	400	150	800	2.2	4	35

Notes:

-All measurements are made at an ambient temperature of 25°C .Ipp applies to -40°C through +85°C temperature range .

*For surge ratings,see next page.

Surge Ratings

Series	I_{pp} 2x10μs	I_{pp} 8x20μs	I_{pp} 10x160μs	I_{pp} 10x560μs	I_{pp} 10x1000μs	I_{pp} 5x320μs	I_{pp} 5x310μs	I_{pp} 10x360μs	I_{TSM} 50/60Hz	di/dt
	Amps	Amps	Amps	Amps	Amps	Amps	Amps	Amps	Amps	Amps/μs
C	500	400	200	150	100	200	200	175	30	500

Thermal Considerations

Package DO-214AA/SMB	Symbol	Parameter	Value	Unit
	T_J	Operating Junction Temperature Range	-40 to +150	°C
	T_S	Storage Temperature Range	-65 to +150	°C
	$R_{\theta JA}$	Junction to Ambient on prited circuit	90	°C /W

Description of Part Number

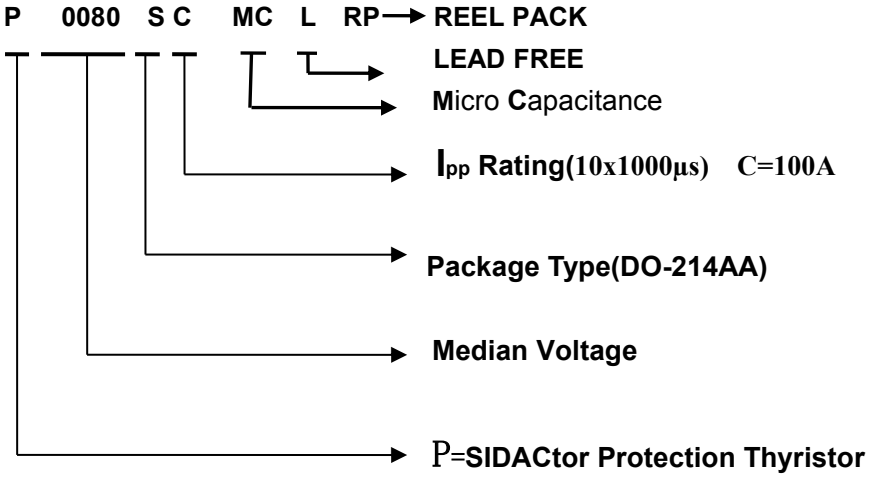

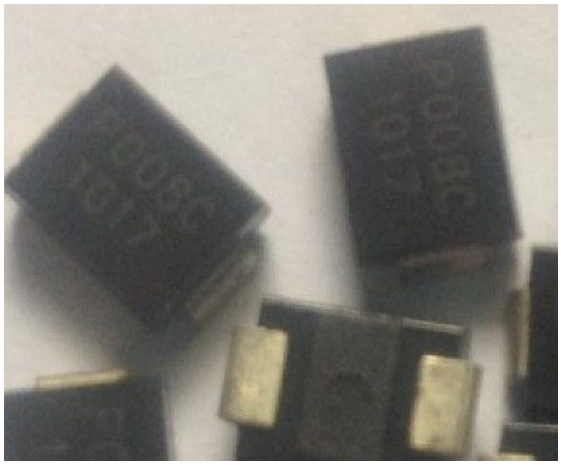

P0080SCMCLRP(Marking:P008C)

Fast delivery Time

Dimensions - DO-214AA

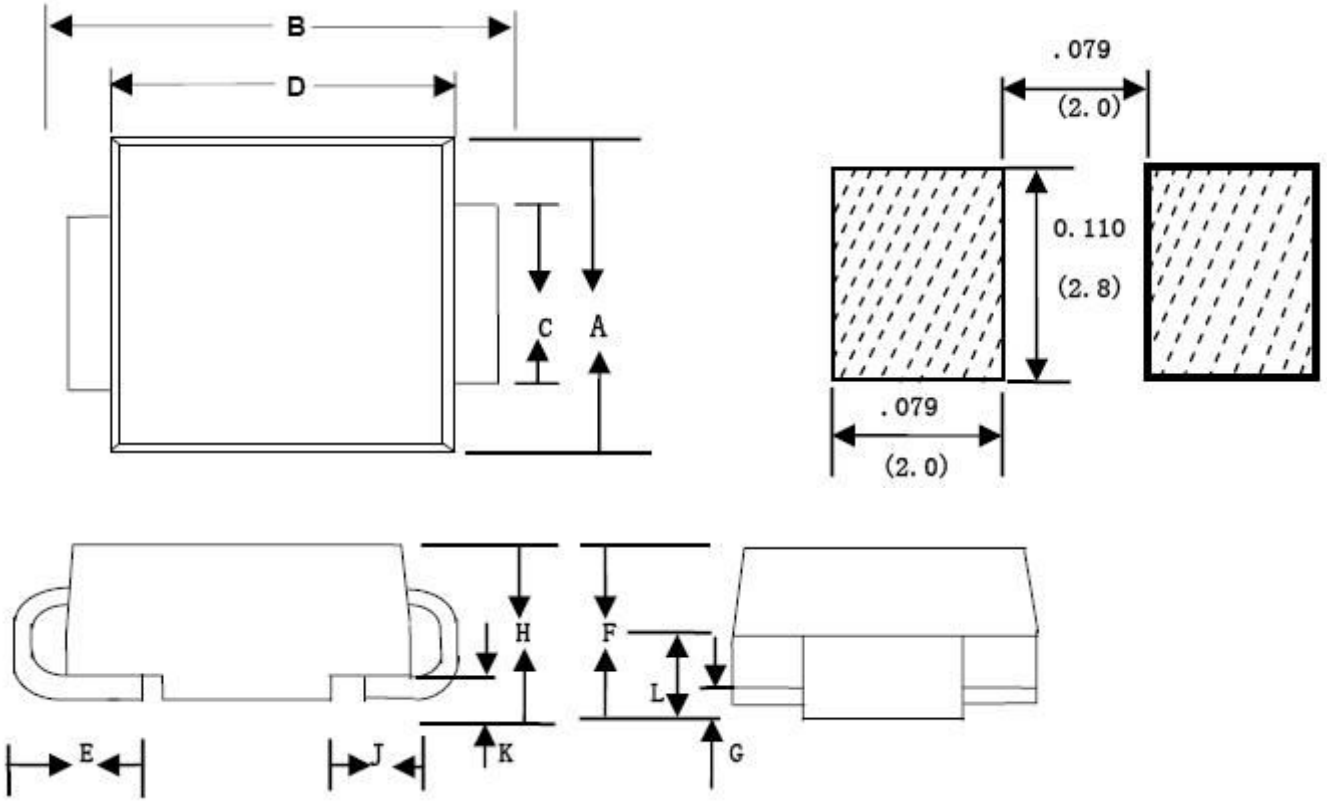

Dimension	Inches		Millimeters	
	Min	Max	Min	Max
A	0.134	0.155	3.40	3.94
B	0.205	0.22	5.21	5.59
C	0.075	0.083	1.90	2.11
D	0.166	0.185	4.22	4.70
E	0.036	0.056	0.91	1.42
F	0.073	0.087	1.85	2.2
G	0.002	0.008	0.05	0.20
H	0.077	0.094	1.95	2.40
J	0.043	0.053	1.09	1.35
K	0.008	0.014	0.20	0.35
L	0.039	0.049	0.99	1.24

Packing Options

Package Type	Description	Packing Quantity	Industry Standard
S	DO-214AA Reel Pack	2500 PCS	EIA-481-D

Characteristics Curve

V-I Characteristics

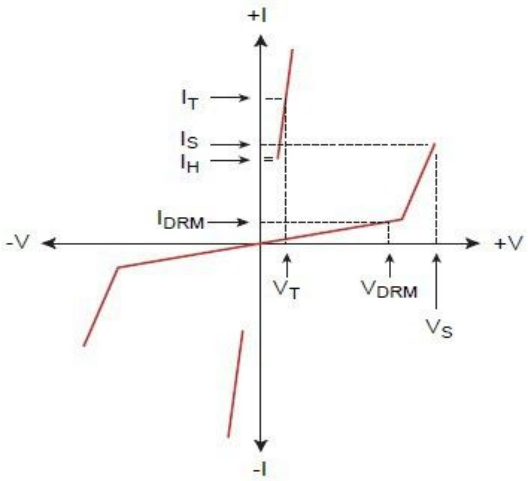

Tr x Td Pulse Waveform

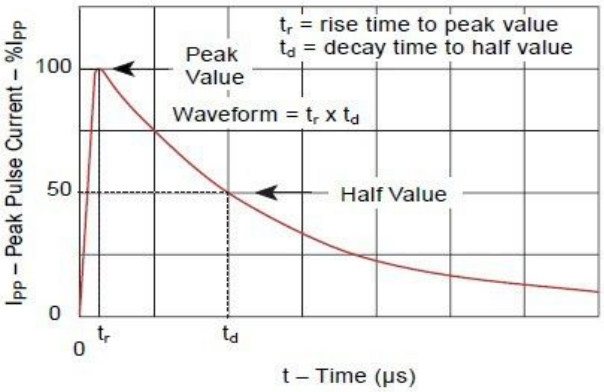

Normalized Vs Change Versus Junction Temperature

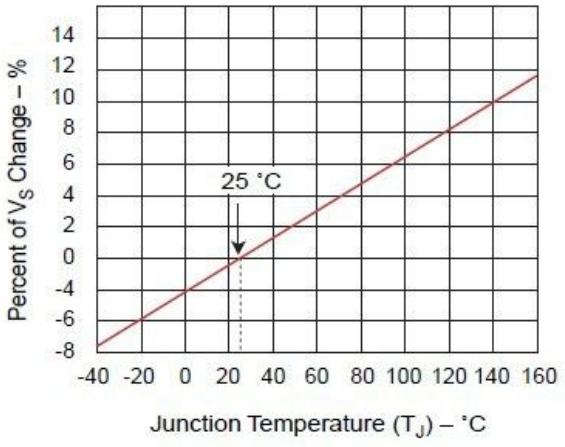

Normalized DC Holding Current Versus Case Temperature

