REVISIONS				
REV.	ECN	DESCRIPTION	DATE	APPROVED
A		INITIAL RELEASE	2012/05/18	J.SI

AMPHENOL PART NUMBER CONFIGURATION
UE78 - B 1 1 2 6 - 0 0 X X 1

PRESS FIT CONNECTOR PLATING
2 = 30 µ" MIN. GOLD ON MATING AREA
15-100 µ" MATTE TIN ON TERMINATION
3 = 30 µ" MIN. GOLD ON MATING AREA
150-300 µ" MATTE TIN ON TERMINATION
5 = 15 µ" MIN. GOLD ON MATING AREA
15-100 µ" MATTE TIN ON TERMINATION
6 = 15 µ" MIN. GOLD ON MATING AREA
150-300 µ" MATTE TIN ON TERMINATION

CAGE PLATING
2 = NICKEL PLATING
3 = MATTE TIN PLATING

PACKAGING
1 = TRAY PACKAGING

PART NUMBER
(LAST DIGIT INDICATING
PACKAGING TYPE,
NOT PRINTED ON THE PART)

DATE CODE

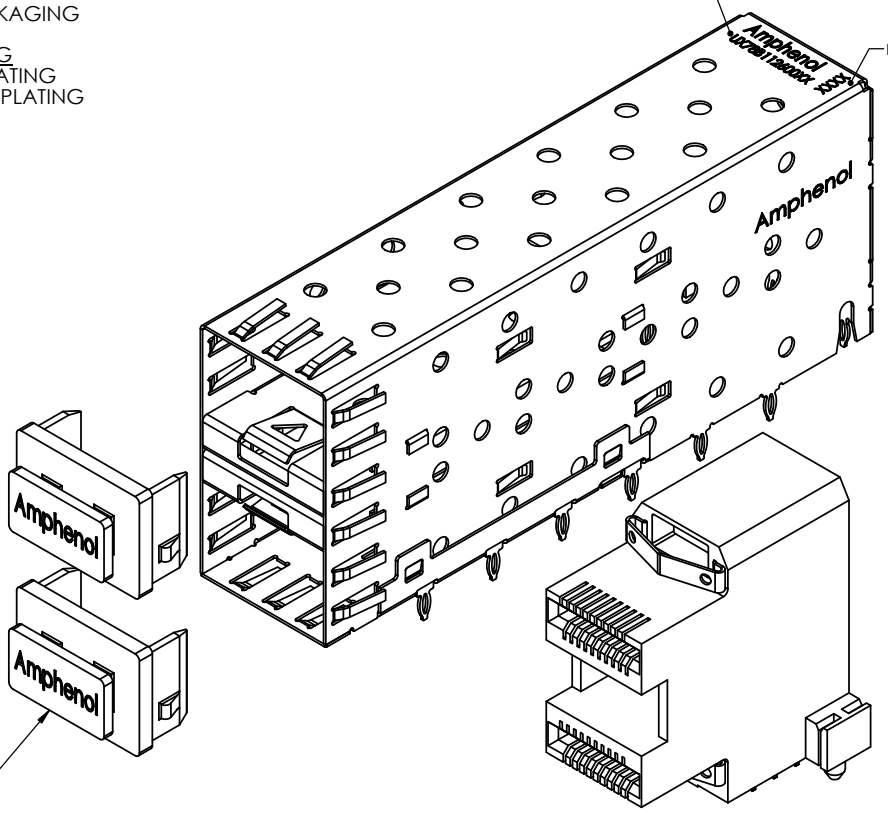

OPTIONAL DUST COVER
(SHIP LOOSE)
P/N:U77-A1110-8000-P

MATERIAL:
CAGE:
COPPER ALLOY

PLATING:
SEE AMPHENOL PART NUMBER
CONFIGURATION FOR OPTIONS.

CONNECTOR:

PLASTIC HOUSING:
HIGH TEMPERATURE RESISTANT NYLON
FLAMMABILITY RATING UL94V-0.

CONTACTS:
PHOSPHOR BRONZE
PLATING OPTION:
SEE AMPHENOL PART NUMBER
CONFIGURATION FOR OPTIONS.

DUST COVER
THERMOPLASTIC,COLOR BLACK.

PACKAGING:
TRAY PACKAGING.

TEMPARATURE RANGE:
-40°C TO +85°C

Amphenol Canada RoHS Compliant EU 2002/95/EC

DO NOT SCALE DRAWING

THIS DOCUMENT CONTAINS PROPRIETARY INFORMATION AND SUCH INFORMATION MAY NOT BE DISCLOSED TO OTHERS FOR ANY PURPOSE OR USED FOR MANUFACTURING PUPOSES WITHOUT PERMISSION FROM AMPHENOL CANADA CORP.

UNLESS OTHERWISE SPECIFIED DIMENSIONS ARE IN MILLIMETERS TOLERANCES ARE:	APPROVALS	DATE
DECIMALS X.X ± 0.25 X.XX ± 0.15 ANGLES ± 1°	DRAWN Grace.L	2012/05/18
MATERIAL AND FINISH N/A	DESIGNED J.SI	2012/05/18
REF. X	CHECKED	
CODE IDENT. NO. 03554	QA APP'D	
	IE APP'D	
	DWG APP'D J.SI	2012/05/18

Amphenol Canada Corp.

TITLE: SFP STACKED COMBO WITH PRESS FIT PINS (CONNECTOR AND CAGE)

SIZE A3 | DWG. NO. P-UE78-B1126-00XX1 | REV. A

SCALE 2:1 | PROJECT | SHEET 1 OF 4

REVISIONS				
REV.	ECN	DESCRIPTION	DATE	APPROVED
A		INITIAL RELEASE	2012/05/18	J.SI

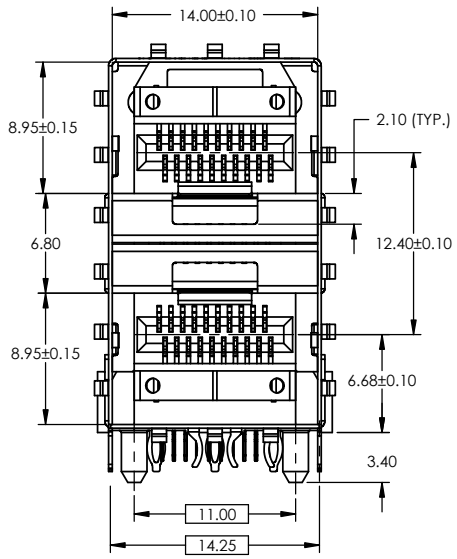

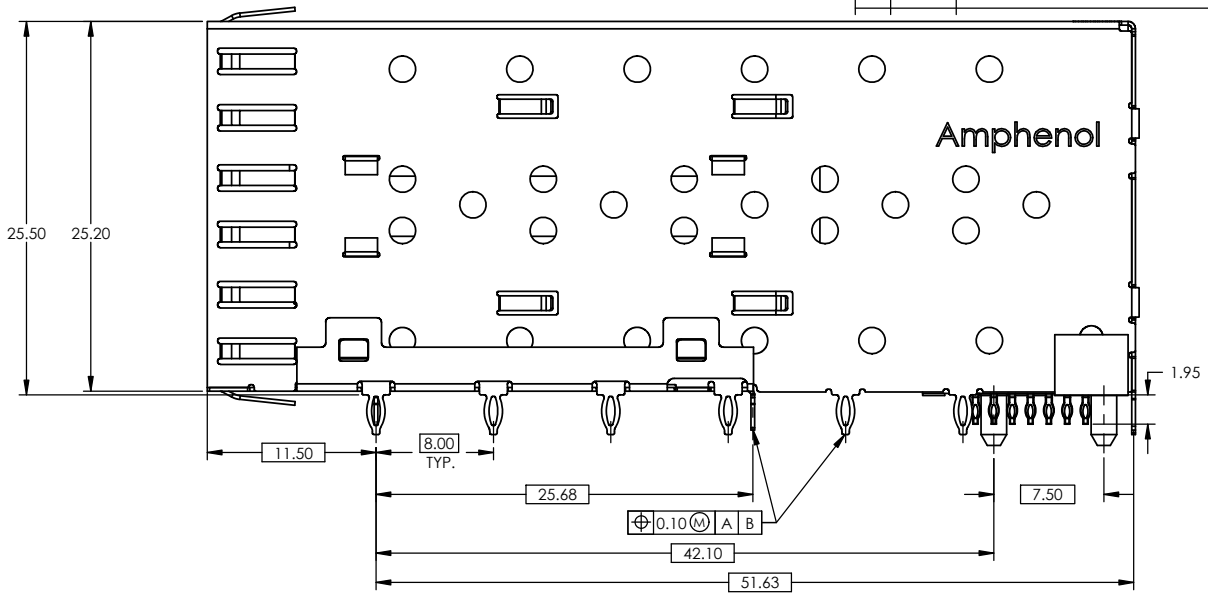

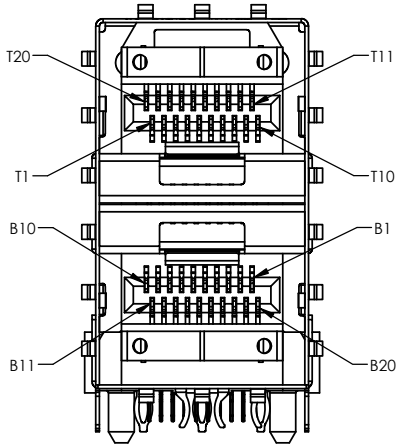

PIN ASSIGNMENT
ON MATING AREA

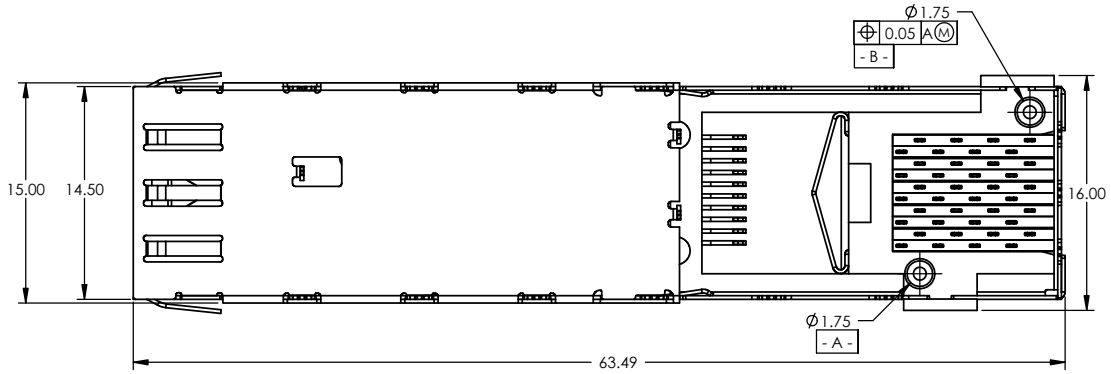

DO NOT SCALE DRAWING

THIS DOCUMENT CONTAINS PROPRIETARY INFORMATION AND SUCH INFORMATION MAY NOT BE DISCLOSED TO OTHERS FOR ANY PURPOSE OR USED FOR MANUFACTURING PUPOSES WITHOUT PERMISSION FROM AMPHENOL CANADA CORP.

UNLESS OTHERWISE SPECIFIED DIMENSIONS ARE IN MILLIMETERS
TOLERANCES ARE:
DECIMALS X.X ± 0.25, X.XX ± 0.15
ANGLES ± 1°
MATERIAL AND FINISH: N/A
REF.: X
CODE IDENT. NO.: 03554

APPROVALS		DATE
DRAWN	Grace.L	2012/05/18
DESIGNED	J.SI	2012/05/18
CHECKED		
QA APP'D		
IE APP'D		
DWG APP'D	J.SI	2012/05/18

Amphenol Canada Corp.

TITLE: SFP STACKED COMBO WITH PRESS FIT PINS (CONNECTOR AND CAGE)

SIZE A3 | DWG. NO. P-UE78-B1126-00XX1 | REV. A
SCALE 2:1 | PROJECT | SHEET 2 OF 4

REVISIONS				
REV.	ECN	DESCRIPTION	DATE	APPROVED
A		INITIAL RELEASE	2012/05/18	J.SI

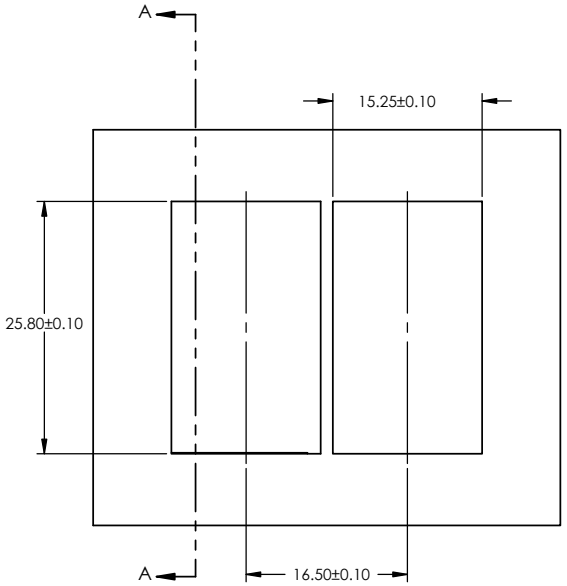

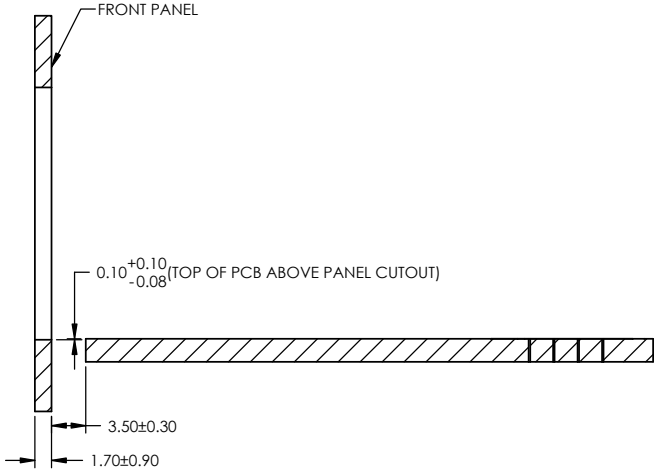

SECTION A-A
SCALE 2 : 1

RECOMMENDED BEZEL DESIGN

DO NOT SCALE DRAWING

THIS DOCUMENT CONTAINS PROPRIETARY INFORMATION AND SUCH INFORMATION MAY NOT BE DISCLOSED TO OTHERS FOR ANY PURPOSE OR USED FOR MANUFACTURING PUPOSES WITHOUT PERMISSION FROM AMPHENOL CANADA CORP.

UNLESS OTHERWISE SPECIFIED DIMENSIONS ARE IN MILLIMETERS TOLERANCES ARE: DECIMALS X.X ± 0.25, X.XX ± 0.15; ANGLES ± 1°	APPROVALS	DATE
	DRAWN Grace.L	2012/05/18
	DESIGNED J.SI	2012/05/18
	CHECKED	
MATERIAL AND FINISH N/A	QA APP'D	
REF. X	IE APP'D	
CODE IDENT. NO. 03554	DWG APP'D J.SI	2012/05/18

Amphenol Canada Corp.

TITLE: SFP STACKED COMBO WITH PRESS FIT PINS (CONNECTOR AND CAGE)

SIZE	DWG. NO.	REV.
A3	P-UE78-B1126-00XX1	A
SCALE 2:1	PROJECT	SHEET 3 OF 4

REVISIONS				
REV.	ECN	DESCRIPTION	DATE	APPROVED
A		INITIAL RELEASE	2012/05/18	J.SI

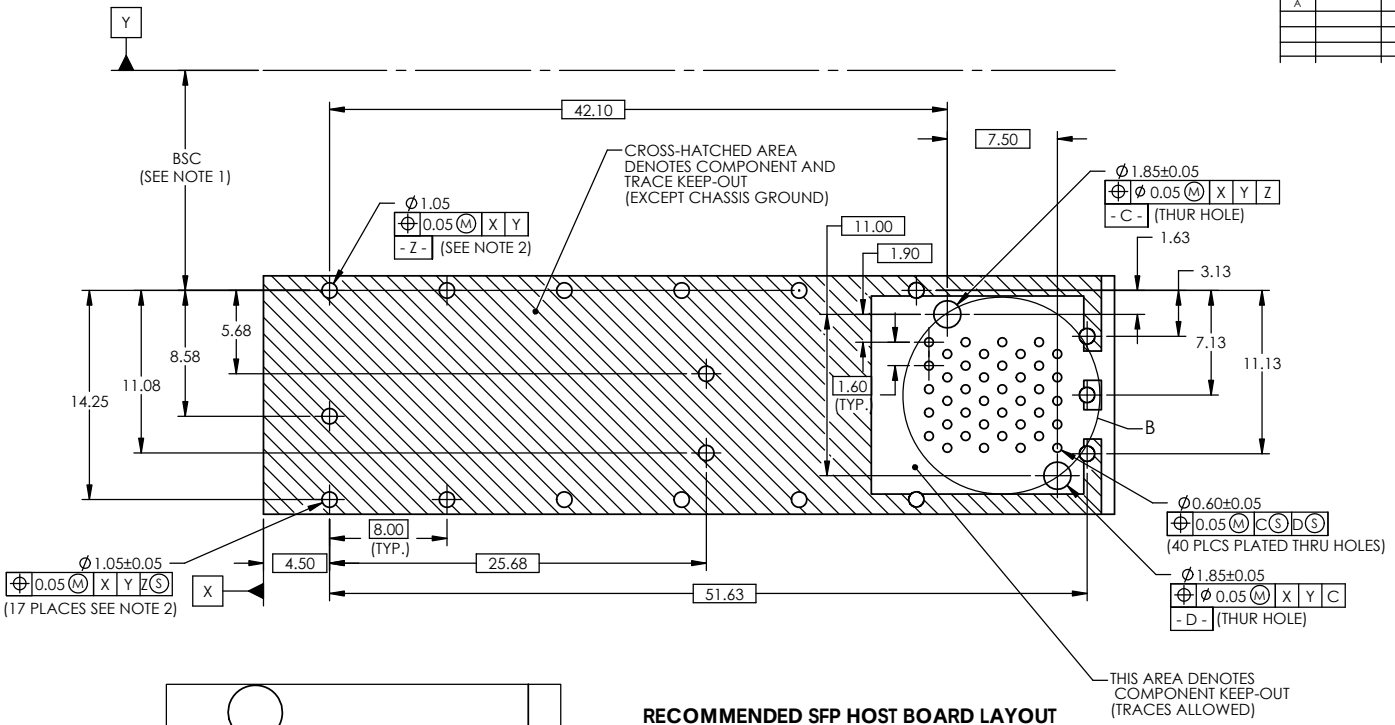

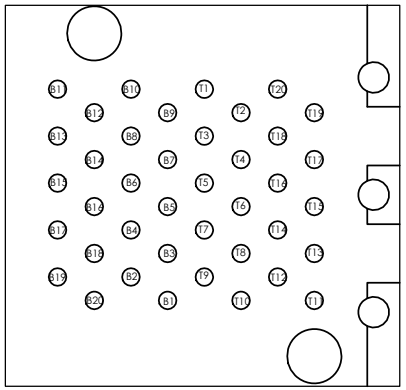

DETAIL B
SCALE 6 : 1

RECOMMENDED SFP HOST BOARD LAYOUT
(ONE SIDE CAGE MOUNTING)

NOTES:
1. DATUM AND BSC DIMS ESTABLISHED BY CUSTOMER.
2. HOLES ARE CHASSIS GROUND.
   18 PLACES .

DO NOT SCALE DRAWING

THIS DOCUMENT CONTAINS PROPRIETARY INFORMATION AND SUCH INFORMATION MAY NOT BE DISCLOSED TO OTHERS FOR ANY PURPOSE OR USED FOR MANUFACTURING PUPOSES WITHOUT PERMISSION FROM AMPHENOL CANADA CORP.

UNLESS OTHERWISE SPECIFIED DIMENSIONS ARE IN MILLIMETERS TOLERANCES ARE:
DECIMALS X.X ± 0.25, X.XX ± 0.15
ANGLES ± 1°
MATERIAL AND FINISH: N/A
REF.: X
CODE IDENT. NO.: 03554

APPROVALS		DATE
DRAWN	Grace.L	2012/05/18
DESIGNED	J.SI	2012/05/18
CHECKED		
QA APP'D		
IE APP'D		
DWG APP'D	J.SI	2012/05/18

Amphenol Canada Corp.

TITLE: SFP STACKED COMBO WITH PRESS FIT PINS (CONNECTOR AND CAGE)

SIZE A3 | DWG. NO. P-UE78-B1126-00XX1 | REV. A
SCALE 2:1 | PROJECT | SHEET 4 OF 4