REVISIONS			
REV	ECN, ERN NO.	DATE	APPRD.
A	PRODUCT DRAWING (EAR 13136)	JUN18/07	K.L.

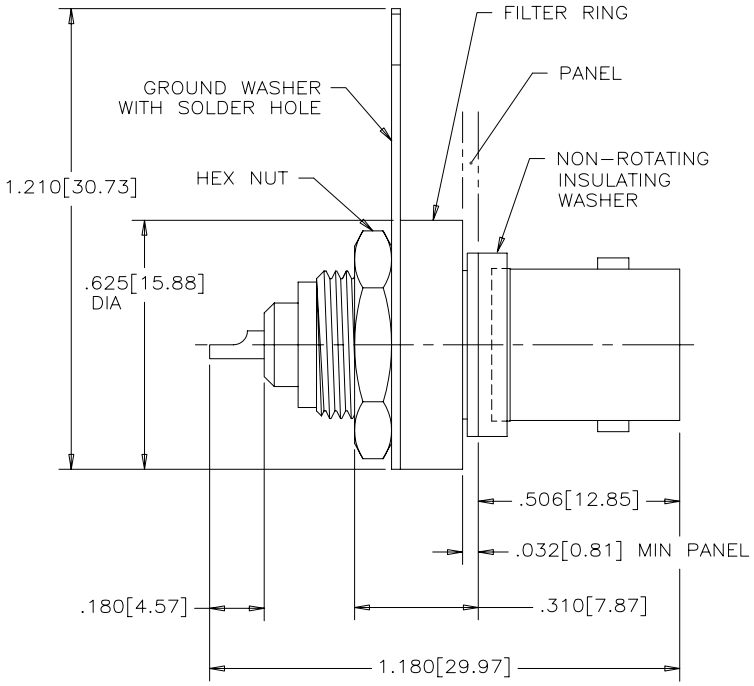

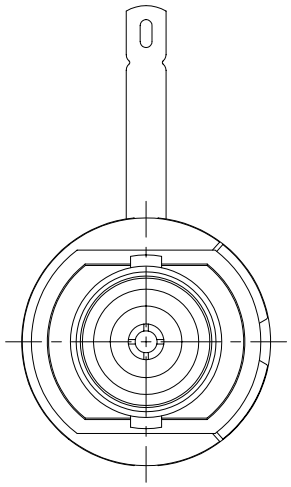

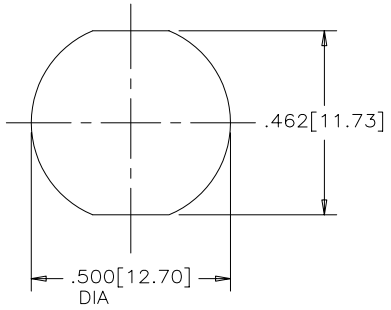

RECOMMENDED PANEL
CUT–OUT

MECHANICAL SPECIFICATIONS:

ALL MATERIALS ARE RoHS COMPLIANT PER EU DIRECTIVE 2002/95/EC AND AMENDMENTS

CENTRE INSERT: TEFLON

METAL BODY: NICKEL PLATED BRASS

CONTACT: PHOSPHOR BRONZE, SILVER PLATED

GROUND DEVICE: NICKEL PLATED PHOSPHOR BRONZE

FILTER RING HOUSING: THERMOPLASTIC

INSULATING WASHER: THERMOPLASTIC

NOTE: CONNECTOR PACKAGING CONSISTS OF ONE OF EACH OF CONNECTOR, INSULATING WASHER, FILTER RING, GROUND WASHER AND HEX NUT.

ELECTRICAL SPECIFICATIONS:

CAPACITANCE: 10,000 pF ±20%

DIELECTRIC WITHSTANDING VOLTAGE: 600 VDC

WORKING VOLTAGE: 200 VDC

IMPEDANCE: 50 OHMS

OPERATING TEMPERATURE: –20°C TO +85°C



AMPHENOL PART NUMBER 456E–107S

THIS DOCUMENT CONTAINS PROPRIETARY INFORMATION AND SUCH INFORMATION MAY NOT BE DISCLOSED TO OTHERS FOR ANY PURPOSE OR USED FOR MANUFACTURING PURPOSES WITHOUT WRITTEN PERMISSION FROM AMPHENOL CANADA CORP.

DRAWN K. LAMBIE	DATE JUN18/07	Amphenol Canada Corp.
DESIGNED		456E SERIES B.N.C. CAPACITIVELY DECOUPLED CONNECTOR, FRONT MOUNT, SOLDER CUP, SILVER PLATED CONTACT, RoHS COMPLIANT
CHECKED		
I. E. APPRD.		
Q. A. APPRD.		
DWG. APPRD.		
ENG. REL. NO.		DWG C · DRAWING NO. P–456E–107S · REV. A
REF. EAR 13136		
DIMENSIONS ARE IN INCHES [mm]	CODE ID. NO. 03554	SCALE 4/1 · WT. ––––– · SURF. ––––– · SHEET 1 OF 1