OCXO SERIES 3000

FEATURES

Small OCXO in EURO package
Frequencies up to 160 MHz

ELECTRICAL PERFORMANCE

PARAMETER	OCXO SERIES 3000	
	AT CUT CRYSTAL	SC CUT CRYSTAL
Supply voltage, nom.	12V, 5V ±5% Standard (3.3V Optional)	
Power dissipation steady state	1.5 Watt Max.	
Heat up power	3 Watt Max	
Heat up time.	3 min Max	
Frequency range	1 To 160 MHz Standard	
Frequency Adjustment	±10PPM Min (0 to 5V)	±0.7PPM Min (0 to 5V)
Freq. stability vs. temperature LX: 0°C to 60°C FZ: -30°C to 70°C D3: -40°C to 85°	±0.05 PPM ±0.1 PPM ±0.25 PPM	±0.01 PPM ±0.02 PPM ±0.03 PPM
	(Standard, contact factory for different temp ranges and stabilities)	
Freq. stability vs. supply changes	±0.015 PPM Max for ±5% Change	±0.010 PPM Max for ±5% Change
Freq. stability vs. load changes	±0.01 PPM Max for ±5% Change	±0.005 PPM Max for ±5% Change
Long term stability (Aging)	±4 PPM Max for 10 Years ±0.005 PPM/Day Max.	±1 PPM Max for 10 Years ±0.002 PPM/Day Max.
Output	HCMOS/TTL/Sine 0 to +7dBm (Low voltage CMOS Available)	
Harmonics, Sub Harmonics	-30dBc(Sine Output)	
Spurious	-75dBc(Sine Output)	
Duty cycle	40/60% to 60/40%(HCMOS)	
Rise / fall time	10nS Max. (HCMOS,10%~90%Vout, 90%~10%Vout)	
Short term Stability (10MHz)	1 E-10 /Sec	5 E-11 /Sec
Phase Noise (Sine Output 10MHZ – under static conditions)	Offset Phase Noise 10Hz -90 dBc/Hz 100Hz -125 dBc/Hz 1000Hz -135 dBc/Hz 10000Hz -150 dBc/Hz	Offset Phase Noise 10Hz -110 dBc/Hz 100Hz -130 dBc/Hz 1000Hz -140 dBc/Hz 10000Hz -150 dBc/Hz

Note: All Typical parameters for a 10MHz output and 5V Supply, for different frequencies consult factory

HOW TO ORDER (PART NUMBER)

Prefix	Output Type	Cut Type	Series	Revision	Temperature Range	Stability	Frequency	Supply Voltage
OX	2:HCMOS 4:LVCMOS 6:SINE	0:AT (No Vcontrol) 1: SC (No Vcontrol) 4: AT (Elect Vcontrol) 5: SC (Elect Vcontrol)	3X:3000 34: Height= 0.5"/12.7mm 36: Height= 0.63"/16mm 37: Height= 1"/25.4mm 39: Height= 0.75"/19mm	A	First letter Lowest Temperature, Second letter Highest Temperature: From A=-55°C to Z=+70°C, Then: 1=+75°C, 2=+80°C, 3=+85°C… in 5°C steps Example: LZ: +0°C to +70°C LX: +0°C to +60°C FZ: -30°C to +70°C D3: -40°C to +85°C	Value x 10E-2 in PPM Example 28= 0.28PPM 10= 0.1PPM	In MHZ	3.3: 3.3V 5; 5V 12; 12V 15; 15V

Example:

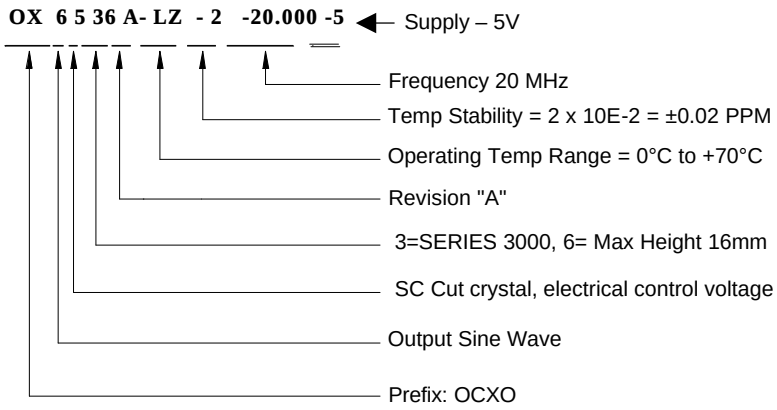

MECHANICAL SPECIFICATION

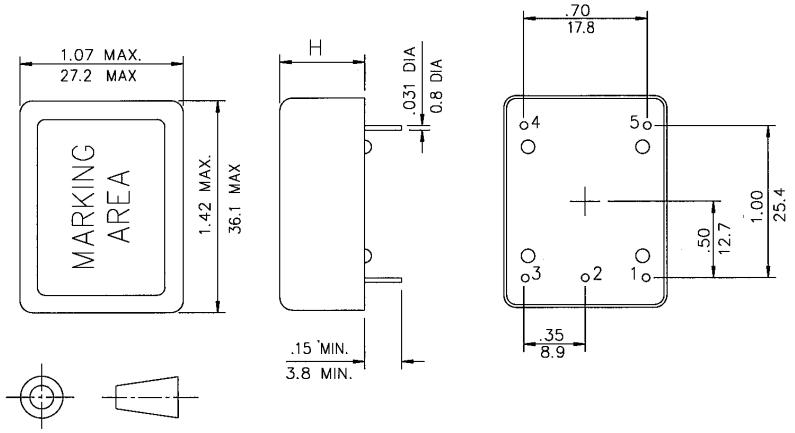

HEIGHT, MAX. "H":

0.5" / 12.7 mm (OXxx34)
0.63" / 16 mm (OXxx36)
0.75" / 19.1 mm (OXxx39)
1" / 25.4 mm (OXxx37)

OUTLINE TOLERANCE:
±0.015" / 0.4mm

PIN FUNCTIONS:
[1] N/C OR CONTROL VOLTAGE
[2] N/C OR REFERENCE VOLTAGE OUT
[3] SUPPLY VOLTAGE
[4] RF OUTPUT
[5] CASE / GROUND