Available at Digi-Key
www.digikey.com

OX200-SC
10 MHz VCOCXO
CO-8 Package

CONNOR WINFIELD

2111 Comprehensive Drive
Aurora, Illinois 60505
Phone: 630-851-4722
Fax: 630-851-5040
www.conwin.com

US Headquarters:
630-851-4722
European Headquarters:
+353-61-472221

Description:

Connor-Winfield model OX200-SC is a 12 Vdc, Oven Compensated Crystal Oscillator with Voltage Control Option (VCOCXO) in a CO-8 package. The OX200-SC is designed for use with applications that require a LVCMOS output, very high frequency stability, low jitter and low phase noise.



Features:

- VCOCXO
- 12 Vdc Operation
- CO-8 Footprint
- Frequency Stability: ±1.5 ppb
- Temperature Range: 0 to 70°C
- LVMOS Output
- Low Jitter and Phase Noise
- RoHS Compliant / Lead Free

Absolute Maximum Ratings

Parameter	Minimum	Nominal	Maximum	Units	Notes
Storage Temperature	-55	-	125	°C	
Operable Temperature Range:	-55	-	85	°C	
Supply Voltage (Vcc)	-	-	15	Vdc	
Output Load	-	-	50	pF	CMOS Signal

Frequency Stabilities

Parameter	Minimum	Nominal	Maximum	Units	Notes
Center Frequency: (Fo)	-	10.0	-	MHz	
Frequency Calibration	-25	-	25	ppb	1
Frequency Stability					
vs Temperature (0 to 70 °C)	-1.5	-	1.5	ppb	2
vs. Warm Up (60 minutes on)	-200	-	200	ppb	7 days off
vs. Warm Up (120 minutes on)	-100	-	100	ppb	7 days off
vs. Warm Up (24 hours on)	-200	-	200	ppb	unlimited time off
vs. Warm Up (72 hours on)	-100	-	100	ppb	unlimited time off
vs. Supply Voltage Change	-0.3	-	0.3	ppb	Vcc ±5%
vs. Load Change	-0.3	-	0.3	ppb	Load ±5%
vs. Aging per day	-0.2	-	0.2	ppb	30 days operation
vs. Aging 5 Years	-60	-	60	ppb	72 hrs. operation
Total Tolerance	-100	-	100	ppb	3
Operating Temperature Range:	0	-	70	°C	

Supply Voltage (Vcc)

Parameter	Minimum	Nominal	Maximum	Units	Notes
Supply Voltage: (Vcc)	11.4	12.0	12.6	Vdc	
Power Consumption:					
Turn On	-	-	9	W	Warm up
Steady State	-	-	3	W	@ 25°C

Input Characteristics - Voltage Control (Vc)

Parameter	Minimum	Nominal	Maximum	Units	Notes
Tuning Range	±0.2	-	-	ppm	
Tuning Sensitivity	0.1		0.3	ppm/V	
Linearity	-	-	20	%	
Control Voltage Range	0.0	2.5	4.0	Vdc	
Tuning Slope		Positive			

LVCMOS Output Characteristics

Parameter	Minimum	Nominal	Maximum	Units	Notes
Load -	-	-	15	pF	
Voltage: High (Voh)	3.0	-	3.6	Vdc	
Low (Vol)	-	-	0.2		
Duty Cycle (Voh-Vol/2)	45	50	55	%	
Output Current	-	-	2.5	mA	
SSB Phase Noise at 1Hz offset	-	-	-90	dBc/Hz	
SSB Phase Noise at 10Hz offset	-	-	-115	dBc/Hz	
SSB Phase Noise at 100Hz offset	-	-	-135	dBc/Hz	
SSB Phase Noise at 1KHz offset	-	-	-140	dBc/Hz	
SSB Phase Noise at 10KHz offset	-	-	-140	dBc/Hz	

RoHS COMPLIANT

CONNOR WINFIELD

2111 Comprehensive Drive
Aurora, Illinois 60505
Phone: 630-851-4722
Fax: 630-851-5040
www.conwin.com

Package Characteristics

Package	CO-8 footprint, resistive welded package with grounded case.

Environmental Characteristics

Shock	500 G's 1ms, Halfsine, 3 shocks per direction, per MIL-STD 202F, Method 213B Test Condition D.
Sinusoidal Vibration	0.06" D.A. or 10G's Peak, 10 to 500 Hz, per MIL-STD-202F, Method 204D, Test Condition A.
Random Vibration	5.35 G's rms. 20 to 2000 Hz per MIL-STD-202F, Method 214,Test Condition 1A, 15 minutes each axis.
Moisture	10 cycles, 95% RH, Per MIL-STD-202F, Method 112.
Marking Permanency	Per MIL-STD-202F, Method 215J.
Attachment Method PCB	Through Hole Mounted
Resistance to Solder Heat	Per MIL-STD-202F, Method 210, Condition E.
Solder Process	RoHS compliant, lead free. See solder profile.

Notes:
1. At time of shipment after 60 minutes of operation, @25°C, Vc = 2.5 Vdc.
*2. Frequency stability vs. change in temperature [±(Fmax-Fmin)/(2*Fo)].*
3. 5 years from time of shipment after 72 hours of operation and Vc = 2.5 Vdc.

Pin Connections

Pin	Connection
1:	Voltage Control (Vc)
2:	N/C
3:	Supply Voltage (Vcc)
4:	RF Output
5:	Ground (Case)

Solder Profile

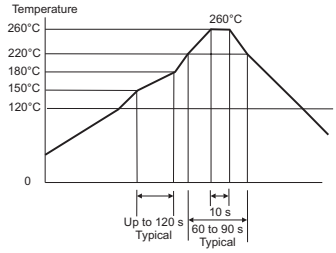

Meets IPC/JEDEC J-STD-020C

Package Outline

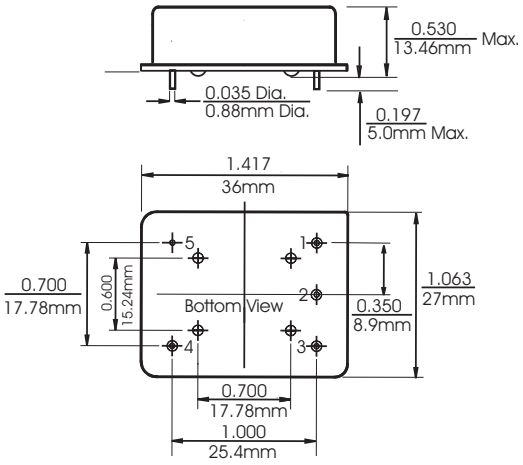

Test Circuit

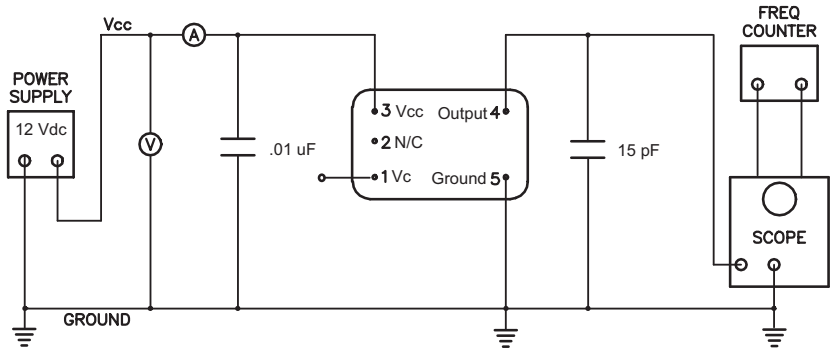

Marking Diagram

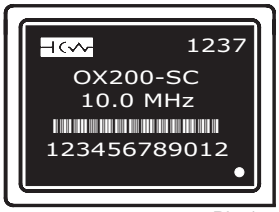

Date Code (YYWW)
Model Number
Output Frequency
Serial # Barcode
Serial Number

Pin 1

Revision History

Revision	Date	Description
00	11/12/09	New issue
01	11/30/10	Added aging 5 years
02	04/05/12	Changed from 3ppb absolute to +/-1.5ppb
03	09/18/12	Updated marking information
04	04/10/13	Changed HCMOS to LVCMOS
05	11/19/13	Added Voltage Control

Ordering Information

OX200-SC - 010.0M

OCXO SERIES

CENTER FREQUENCY

Bulletin	**Cx194**
Page	**2 of 2**
Revision	**05**
Date	**19 Nov 2013**

Specifications subject to change without notification. See Connor-Winfield's website for latest revision. All dimensions in inches.
© Copyright 2014 The Connor-Winfield Corporation Not intended for life support applications.