

OV9732 720p HD product brief



Power-Efficient and Compact HD CameraChip™ Sensor for Battery-Powered Smart-Home and Security Applications

lead free

available in a lead-free package

OmniVision's OV9732 is a low-power and ultra-compact CameraChip™ sensor that brings 720p high definition (HD) video to mainstream security systems and wireless battery-powered smart-home cameras. Compared to the previous generation OV9712, the OV9732 is 35 percent smaller and delivers dramatically improved pixel performance.

The OV9732 CameraChip sensor utilizes OmniPixel3-HS™ high sensitivity 3.0 µm pixel technology to bring industry-leading scene reproduction to a wide range of security and lifestyle camera applications that operate in extremely high- and low-light conditions. The sensor's narrow 9-degree chief ray angle (CRA) supports consumer-grade optical lens systems and reduces image artifacts for enhanced performance.

When operating in low-power mode, the 1/4-inch OV9732 requires just 99 mW to capture 720p HD video at 30 frames per second.

Find out more at www.ovt.com.

OmniVision

OV9732



Applications

- IP Cameras
- Life Style Cameras
- Surveillance
- Motion Cameras

Product Features

- support for image sizes:
  - full size (1280x720)
  - VGA (640x480)
  - 2x2 RGB binning (640x360)
- support for output formats:
  10-bit RAW output
  with 1-lane MIPI and DVP
- on-chip phase lock loop (PLL)
- programmable controls for:
  - frame rate
  - mirror and flip
  - gain/exposure
  - windowing
- support for horizontal and vertical sub-sampling
- low power mode (LPM) function
- capable of maintaining register values at software power down
- standard SCCB interface
- GPIO tri-state configurability and programmable polarity
- FSIN
- image quality control:
  - defect pixel correction (DPC)
  - automatic black level calibration (ABLC)

Ordering Information

- **OV09732-H35A**
  (color, lead-free, 35-pin CSP)

Product Specifications

- **active array size:** 1280 x 720
- **power supply:**
  - **core:** 1.7 - 1.9V (1.8V normal)
  - **analog:** 2.7 - 2.9V (2.8V normal)
  - **I/O:** 1.7 - 1.9V (1.8V normal)
- **power requirements:**
  - **active:** 99 mW
  - **standby:** 36 µW
- **temperature range:**
  - **operating:** -30°C to +70°C junction temperature
  - **stable image:** 0°C to +50°C junction temperature
- **output formats:** 10-bit RAW RGB
- **lens size:** 1/4"
- **lens chief ray angle:** 9°
- **input clock frequency:** 6 - 27 MHz
- **scan mode:** progressive
- **maximum image transfer rate:** 30 fps
- **sensitivity:** 2.066 V/Lux-sec
- **shutter:** rolling shutter
- **max S/N ratio:** 39 dB
- **dynamic range:** 72 dB @ 8x gain
- **maximum exposure interval:** 798 x t_{ROW}
- **pixel size:** 3 µm x 3 µm
- **image area:** 3888 µm x 2208 µm
- **package dimensions:**
  4704 µm x 2994 µm

Functional Block Diagram

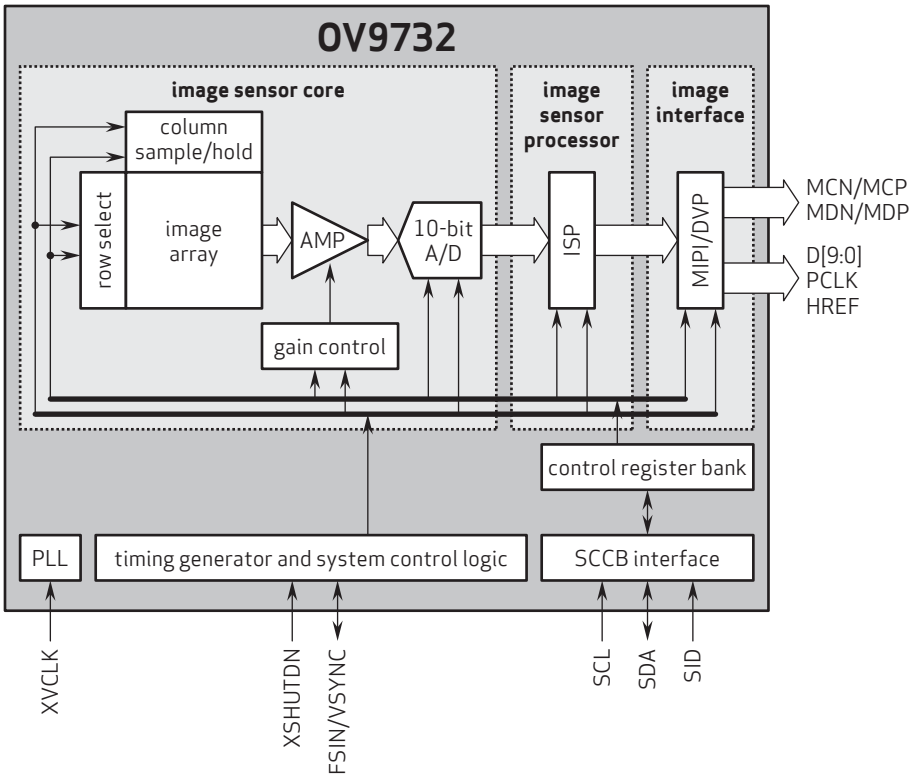

4275 Burton Drive
Santa Clara, CA 95054
USA

Tel: + 1 408 567 3000
Fax: + 1 408 567 3001
www.ovt.com

OmniVision reserves the right to make changes to their products or to discontinue any product or service without further notice. OmniVision and the OmniVision logo are registered trademarks of OmniVision Technologies, Inc. CameraChip and OmniPixel3-HS are trademarks of OmniVision Technologies, Inc. All other trademarks are the property of their respective owners.

Version 1.2, October, 2017