

OV10625 HD HDR product brief

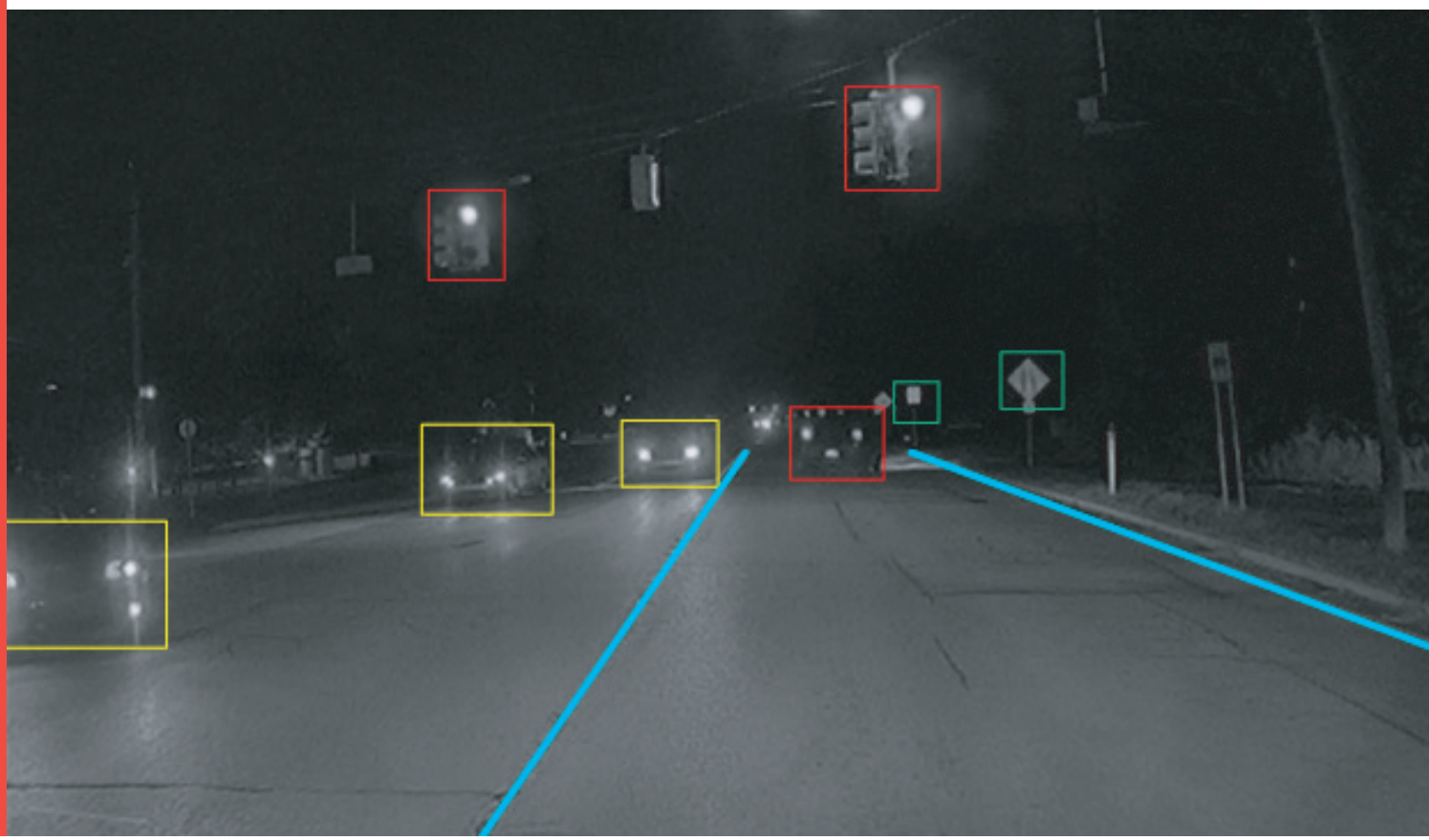

available in a lead-free package

Industry-Leading Sensitivity and High Dynamic Range for Next-Generation Automotive Applications

OmniVision's new OV10625 image sensor is a high performance OmniHDR imaging solution that brings industry-leading sensitivity and best-in-class high dynamic range (HDR) to advanced driver assistance systems (ADAS).

The sensor's benefits enable a host of ADAS features, including: pedestrian detection, lane-departure warning, lane keeping assist, blind spot detection, and traffic signal recognition, among others.

The 1/3.2-inch OV10625 delivers HDR performance of up to 120 dB combined with best-in-class low-light sensitivity of 15 V/Lux-sec ensures accurate scene reproduction in a wide range of driving conditions.

The OV10625 supports digital RAW data output and fits into one of the industry's most compact and efficient 7.3 x 7.8 mm package.

Find out more at www.ovt.com.

OV10625

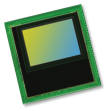

Applications

- Automotive
  - pedestrian detection
  - lane-departure warning
  - lane keeping assist
  - blind spot detection
  - traffic signal recognition

Product Features

- support for image size: WVGA, VGA, QVGA and any cropped size
- high dynamic range
- high sensitivity
- safety features
- low power consumption
- image sensor processor functions:
  - automatic exposure/gain control
  - lens correction
  - defective pixel cancelation
  - HDR combination and tone mapping
  - automatic black level correction
- supported output formats: RAW
- horizontal and vertical sub-sampling
- serial camera control bus (SCCB) for register programming
- external frame synchronization capability
- 50/60 Hz flicker cancellation
- parallel 16-bit DVP output
- embedded temperature sensor
- one time programmable (OTP) memory

Ordering Information

- **OV10625-N02V-1A-Z**
  (RCCC, lead-free, 102-pin aCSP™, rev 1A, in tray)

Product Specifications

- **active array size:** 752 x 548
- **power supply:**
  - **core:** 1.425 - 1.575V
  - **analog:** 3.14 - 3.47V
  - **I/O:** 1.7 - 3.47V
- **power requirements:**
  - **active:** TBD
  - **standby:** TBD
- **temperature range:**
  - **operating:** -40°C to +105°C sensor ambient temperature and -40°C to +125°C junction temperature (operating sensor junction temperatures above +60°C may result in degraded image quality)
- **output interfaces:** 16-bit parallel DVP
- **output formats:** up to 20-bit combined RAW, separated 8-/10-bit RAW
- **lens size:**
  - **VGA:** 1/3.7"
  - **WVGA:** 1/3.2"
- **lens chief ray angle:** 9°
- **input clock frequency:** 6 - 27 MHz
- **maximum image transfer rate:** 60 fps full resolution
- **dynamic range:** -120 dB
- **sensitivity:** 15 V/lux-sec
- **scan mode:** progressive
- **shutter:** rolling shutter
- **maximum exposure interval:** TBD
- **pixel size:** 6 µm x 6 µm
- **image area:** 4608 µm x 3384 µm
- **package dimensions:**
  - **aCSP:** 7310 µm x 7810 µm

Functional Block Diagram

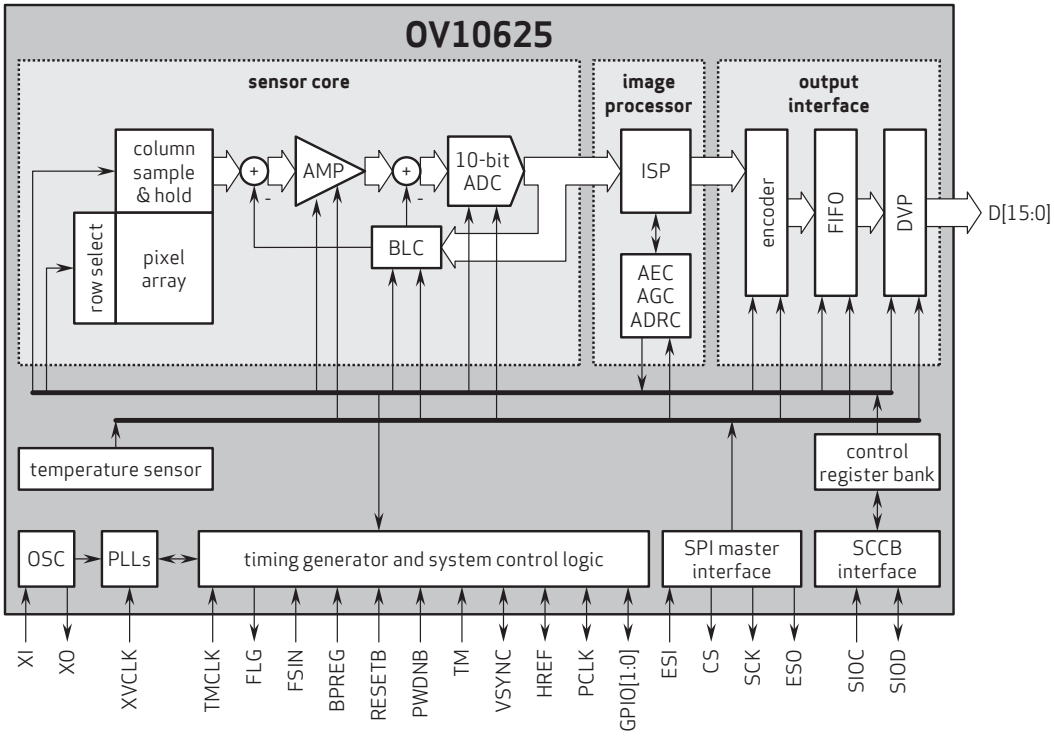

4275 Burton Drive
Santa Clara, CA 95054
USA

Tel: + 1 408 567 3000
Fax: + 1 408 567 3001
www.ovt.com

OmniVision reserves the right to make changes to their products or to discontinue any product or service without further notice. OmniVision and the OmniVision logo are registered trademarks of OmniVision Technologies, Inc. OmniBSI is a trademark of OmniVision Technologies, Inc. All other trademarks are the property of their respective owners.

Version 1.1, October, 2014