

OV7949 NTSC/PAL product brief



lead free

available in a lead-free package

high-performance security CameraChip sensor

The OV7949 CameraChip™ sensor is known as one of the most highly integrated true video NTSC/PAL camera systems. With high functionality and proven excellence in extreme low light settings, the OV7949 image sensor can compete head-to-head with the highly competitive CCD segment of the security surveillance market.

With an ever growing security surveillance camera market, the OV7949 image sensor is the most cost efficient solution for applications requiring a high performance video camera with a small footprint, low voltage, low power consumption and high performance. The OV7949 excels in low light conditions and can operate within a wide temperature range from -20°C to +70°C.

Key features of the 1/3 inch OV7949 include reduced blooming/smearing effects, and a Genlock function, which allows the synchronization of two or more video sources. This enables the development of very affordable closed-circuit security monitoring systems that are very easy to set up, making the OV7949 a very suitable product for consumer and small business solutions.

The OV7949 supports NTSC/PAL composite video output and can directly interface with a TV monitor or another device with 75 Ohm loading. These features and functions of the OV7949 make it a strong solution for any surveillance camera application.

OmniVision

OV7949

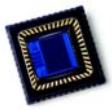

applications

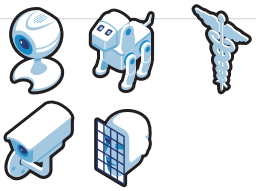

- security/surveillance cameras
- video conferencing
- video phones
- video e-mail
- toys
- fingerprint equipment
- medical and dental equipment

ordering information

- OV07949-C10A (color, NTSC CLCC-48)
- OV07949-C20A (color, PAL CLCC-48)
- OV07449-C10A (b&w, NTSC CLCC-48)
- OV07449-C20A (b&w, PAL CLCC-48)

product features

- OmniPixel2™ technology
- single chip 1/3" format video camera
- composite video (NTSC/PAL) differential output drive
- sensitivity boost (+42 dB)
- automatic exposure/gain with 16-zone control
- auto white balance control
- aperture/gamma correction
- 50/60 Hz flicker cancellation
- external frame sync capability (Genlock)
- SPI/EEPROM used to control overlay and set other customer variables
- I2C compatible serial camera control bus (SCCB) control interface for register programming
- low power consumption
- extremely low dark current for high temperature applications
- defective pixel correction

product specifications

- **array size:** PAL: 628 x 586 NTSC: 510 x 496
- **power supply:** analog/ADC/10: 3.3 VDC ± 5% digital core: 1.8 VDC ± 5%
- **power consumption:** 168 mW (DVDD=1.8V. all other voltages=3.3V. 75 Ω loading
- **image area:** 5.961 mm x 4.276 mm
- **temperature range:** -20°C to +70°C
- **exposure time range:** 1/60 s - 12 µs (NTSC) 1/50 s - 12.5 µs (PAL)
- **sensitivity:** 4.6V/Lux-sec @ 5600K
- **S/N ratio:** 48 dB (max)
- **dynamic range: 50 dB**
- **pixel size: 9.2** µm **x 7.2** µm
- **dark current: 70 mW/s @60°C**
- **fixed pattern noise:** 0.079% of $V_{PEAK\ TO\ PEAK}$
- **package dimensions:** 14.22 mm x 14.22 mm

functional block diagram

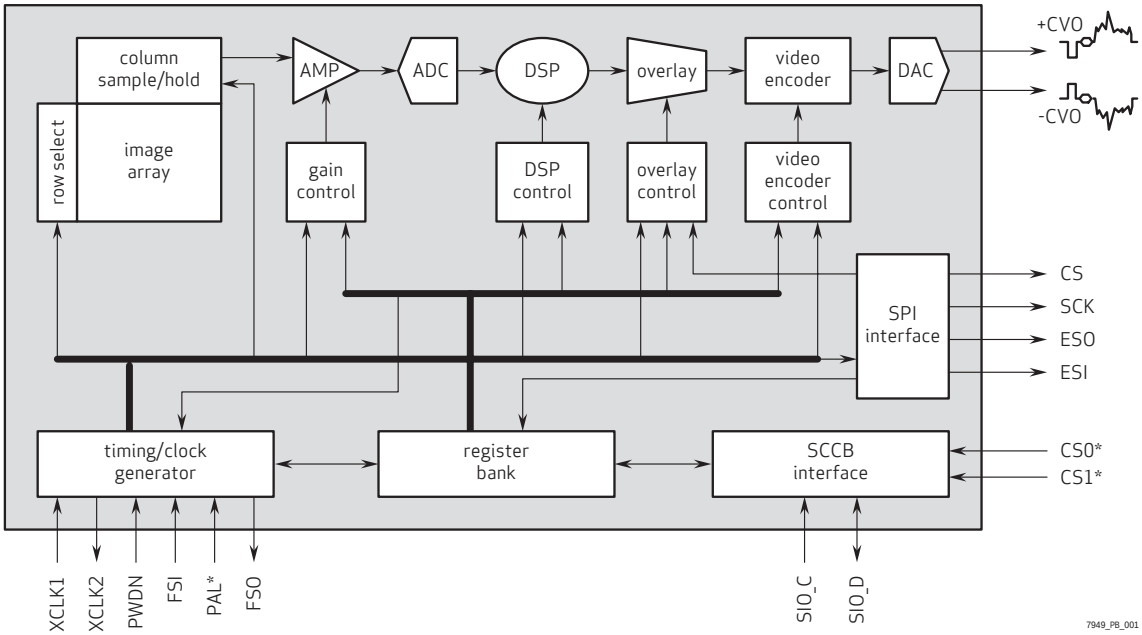

1341 Orleans Drive
Sunnyvale, CA 94089

tel: +1 408 542 3000
fax: +1 408 542 3001
www.ovt.com

OmniVision reserves the right to make changes to their products or to discontinue any product or service without further notice. OmniVision, the OmniVision logo and Omnipixel are registered trademarks of OmniVision Technologies, Inc. CameraChip and OmniPixel2 are trademarks of OmniVision Technologies, Inc. All other trademarks are the property of their respective owners.

Version 2.6, September, 2007