Model No.	OSWCXX
REV.	C1

PRODUCT SPECIFICATION FOR **LED Waterproof Light**

Descriptions:

- LED Waterproof Light,
- Long life, easy installation
- Voltages available 12VDC
- LED Type: SMD LED, 5.0x5.0mm, 120deg

Features:

- Available in red, orange, yellow, green, blue, white, etc
- Directly use on line voltage
- Low power consumption, high intensity
- Energy saving
- Excellent beam control
- Long life

Application:

- Channel letter signs
- Indirect accent décor light
- Large area back lighting
- Under counter light
- Decorate building's contour
- Substitute neon light

Product Picture:



Device Selection Guide

Module No.	Color	Dom. Wavelength (Typ.)	Intensity / Per LED (Typ.)
OSWCR5	Red	625±5nm	1120 mcd
OSWCO5	Orange	605±5nm	1120 mcd
OSWCY5	Yellow	590±5nm	1120 mcd
OSWCG5	Green	525±5nm	3000 mcd
OSWCB5	Blue	470±5nm	1560 mcd
OSWCW5	White	X=0.27 ; Y=0.28	7000 mcd
OSWCM5	Warm White	X=0.45 ; Y=0.41	5000 mcd
OSWCK5	Pink	X=0.45 ; Y=0.17	1900 mcd
OSWCRGB	Red	625±5nm	500 mcd
	Green	525±5nm	1120 mcd
	Blue	470±5nm	400 mcd

Absolute Maximum Ratings(Ta=25℃)

Items	Symbol	Values	Units
Operating Supply Range(DC)	Vidc	14	V
Input Current (DC)	Ii	1.8	A
Power Dissipation	Pa	25.2	W
LED Light Source Temperature	Tled	105	DegC
Operating Temperature	Tope	-10 ~ +40	DegC
Storage Temperature	Tsto	-20 ~ +80	DegC

Typical Performance (Ta=25℃)

Items	Symbol	Min.	Typ.	Max.	Units
LED Module Power	Pm	-	14.4	25.2	w
Input Voltage(DC)	Vi	-	12	14	V
Product Input Current	If	-	1.2	1.8	A
Beam Pattern	BP	-	120	-	Deg
Total Length of Modules (Including Pin)	Lmod.	-	1000	-	mm
LED Quantity of Every Meter	QTY	-	60	-	PCS
Net Weight	Wei.	---	70	---	g

Model No.	OSWCXX
REV.	C1

Product Dimensions:

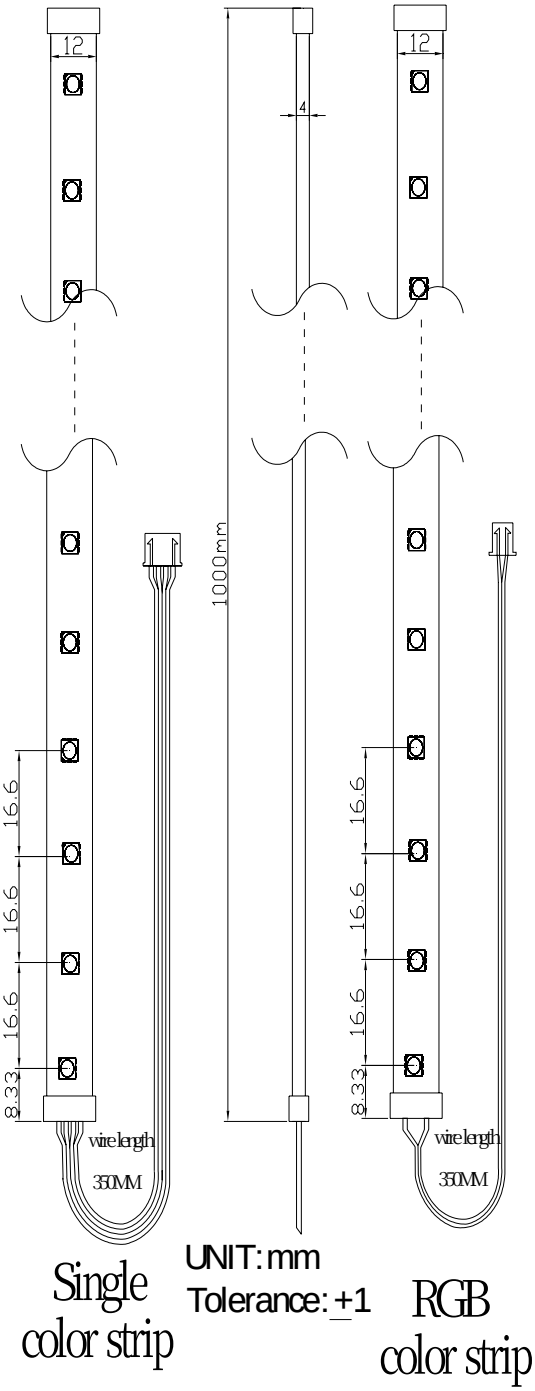

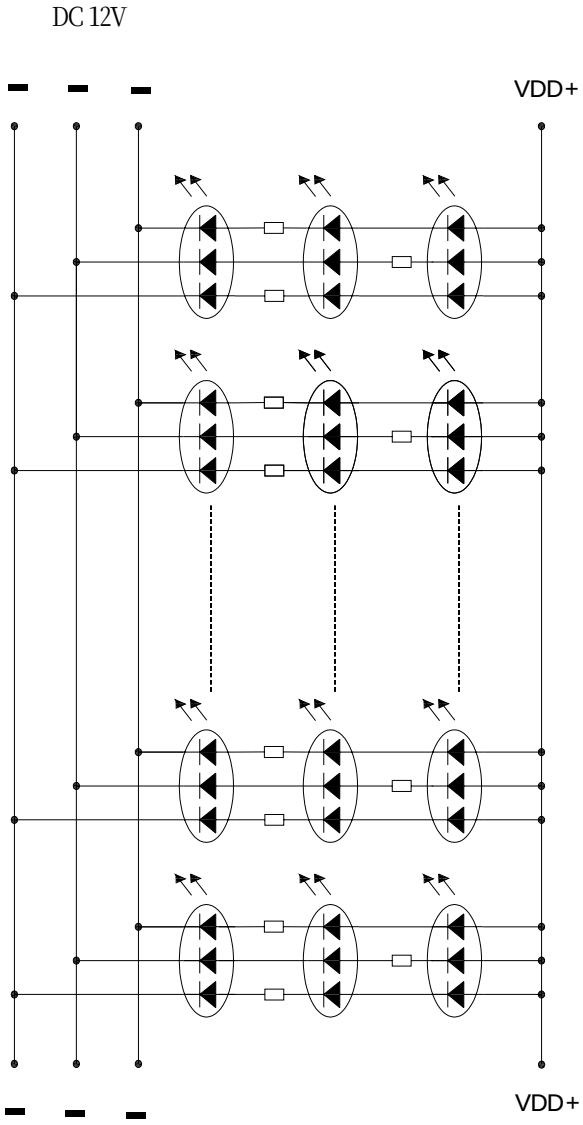

Product Packing Instruction:

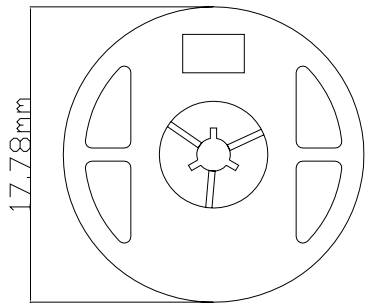

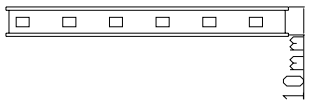

Unit: mm

A	475±10
B	235±10
C	105±5

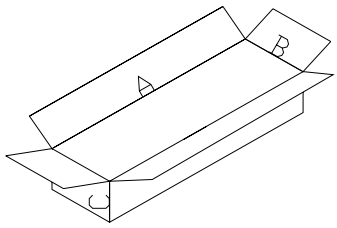

Package: Box
5M/ Roll
15 Roll/ Box

Packaging methods: 5 Boxes/ Carton

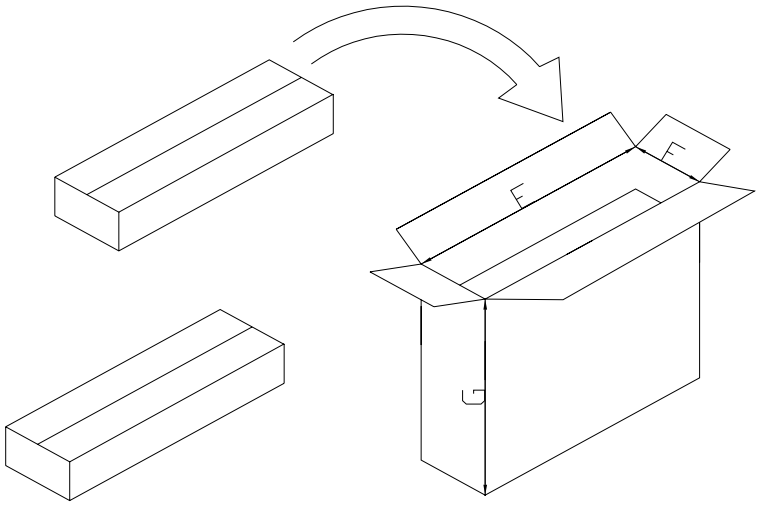

Unit: mm

E	490±10
F	250±10
G	560±10

3.1 There are 5 Boxes in carton, totally 75 Roll/ Box
3.2 The dimension of outer carton is 490*250*560mm