OptoSupply
Light It Up

5mm Round Full Color Flashing Red & Blue & Green LED

OST1MK5A31A

■Features

- High Luminous LEDs
- 5mm Round Standard Directivity
- Superior Weather-resistance
- Flashing Type
- Water Clear Type

■Outline Dimension

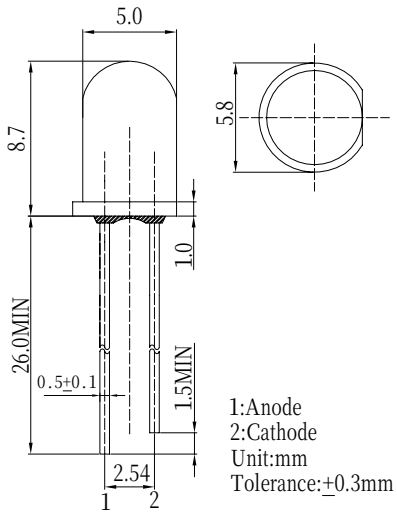

■Applications

- Toys
- Games
- Audio
- Other Lighting

■Absolute Maximum Rating (Ta=25℃)

Item	Symbol	Value	Unit
Power Supply	Voltage	5	V
Operating Temperature	Topr	-30 ~ +85	℃
Storage Temperature	Tstg	-40~ +100	℃
Lead Soldering Temperature	Tsol	260℃/5sec	-

■Directivity

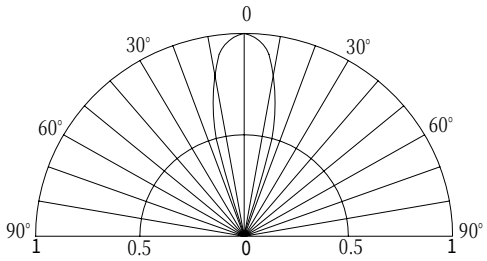

■Electrical -Optical Characteristics (Ta=25℃)

Item	Symbol	Conditio	Min.	Typ.	Max.	Unit
DC Forward Voltage	Vdd	I_F=20mA	3.8	4.5	5.0	V
Oscillator Frequency*	Fled	I_F=20mA	-	60	-	S
Duty Cycle	Duty	I_F=20mA	-	-	-	-
Domi. Wavelength*	λ_D (Red)	I_F=20mA	620	625	630	nm
	λ_D (Blue)	I_F=20mA	465	470	475	nm
	λ_D (Green)	I_F=20mA	520	525	530	nm
Luminous Intensity*	Iv(Red)	I_F=20mA	7000	8400	-	mcd
	Iv(Blue)	I_F=20mA	3000	4000	-	mcd
	Iv(Green)	I_F=20mA	12000	14400	-	mcd
50% Power Angle	$2\theta_{1/2}$	I_F=20mA	-	30	-	deg

*1 Tolerance of dominant wavelength is ±1nm
*2 Tolerance of luminous intensity is ±15%
*3 Tolerance of Frequency is ±20%

LED & Application Technologies

ATTENTION
OBSERVE PRECAUTIONS
ELECTROSTATIC
SENSITIVE DEVICES