OptoSupply
Light It Up

1.6 x 0.8 x 0.4mm SMD

OSXX0603C1A

Ver.A.2

■Features

- Single chip
- Super high brightness of surface mount LED
- Sorting for Iv and Vf @ 5mA of If
- Compact package outline (LxWxT) of 1.6mm x 0.8mm x 0.4mm
- Compatible to IR reflow soldering.

■Applications

- Backlighting (switches, keys, etc.)
- Marker lights (e.g. steps, exit ways, etc.)

■Outline Dimension

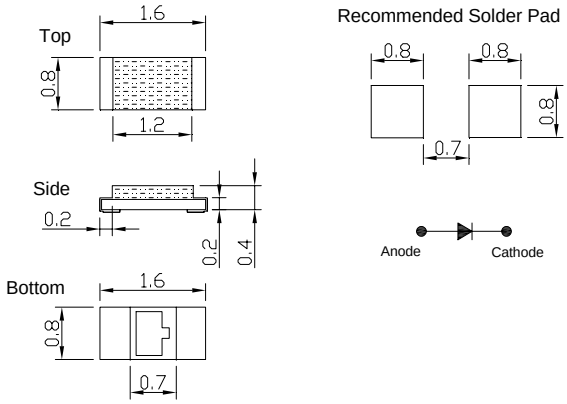

■Absolute Maximum Rating (Ta=25°C)

Item	Symbol	Value		Unit
		WT/BL/TG	YG/YL/OR/HR	
DC Forward Current	I_F	30	30	mA
Pulse Forward Current*	I_{FP}	100	100	mA
Reverse Voltage	V_R	5	5	V
Power Dissipation	P_D	100	70	mW
Operating Temperature	Topr	-40 ~ +85		°C
Storage Temperature	Tstg	-40~ +85		°C
Lead Soldering Temperature	Tsol	260°C/5sec		-

*Pulse width Max 0.1ms, Duty ratio max 1/10

■Directivity

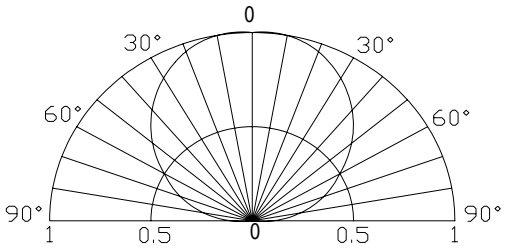

■Electrical -Optical Characteristics (Ta=25°C)

Part Number	Color			V_F (V)			I_R(μA)	Iv(mcd)			λD(nm)			2θ1/2(deg)
				Min.	Typ.	Max.	Max.	Min.	Typ.	Max.	Min.	Typ.	Max.	Typ.
				I_F=5mA			V_R=5V	I_F=5mA						
OSWT0603C1A	White	WT		2.7	2.9	3.2	100	37	74	110	X=0.27, Y=0.28			120
OSBL0603C1A	Blue	BL		2.6	2.9	3.2	100	9	23	37	465	470	475	120
OSTG0603C1A	True Green	TG		2.6	2.9	3.1	100	60	103	145	520	525	530	120
OSYG0603C1A	Yellow green	YG		1.7	1.9	2.2	100	6	11	16	565	570	575	120
OSYL0603C1A	Yellow	YL		1.7	1.9	2.2	100	27	40	71	586	590	592	120
OSOR0603C1A	Orange	OR		1.7	1.9	2.2	100	18	35	60	600	605	610	120
OSHR0603C1A	Red	HR		1.7	1.9	2.2	100	18	35	60	620	625	630	120

Note: * Vf tolerance: ±0.05V

* Dominant wavelength tolerance: ±1nm

* Luminous intensity is NIST reading. Luminous intensity tolerance:±10%

■ Optical and electrical characteristics

TYPICAL ELECTRICAL/OPTICAL CHARACTERISTIC CURVES

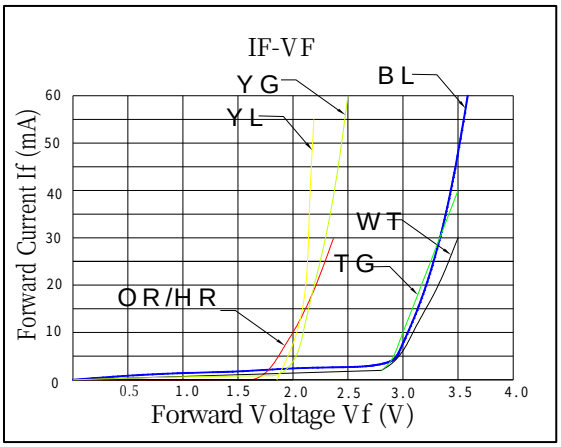

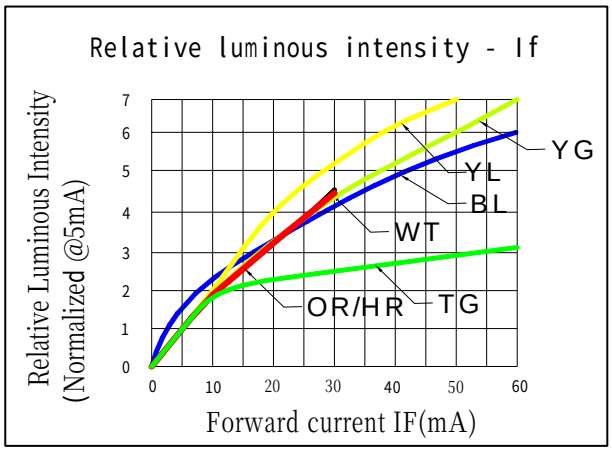

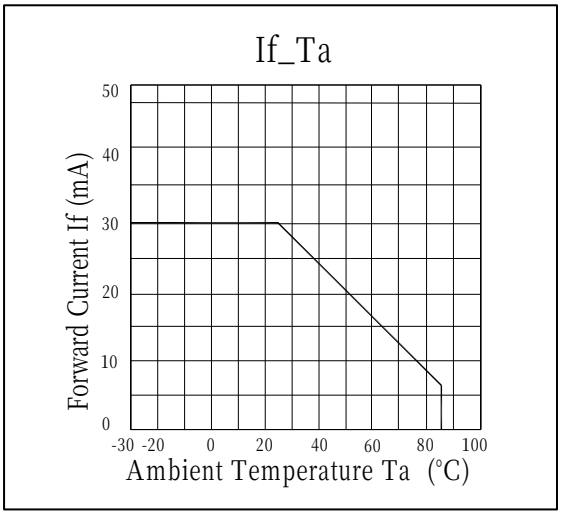

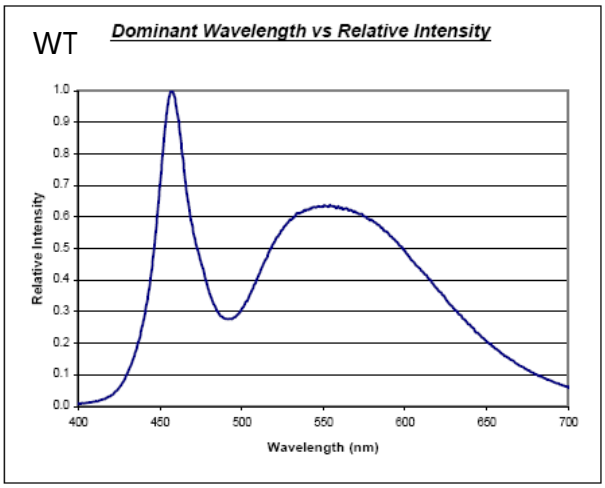

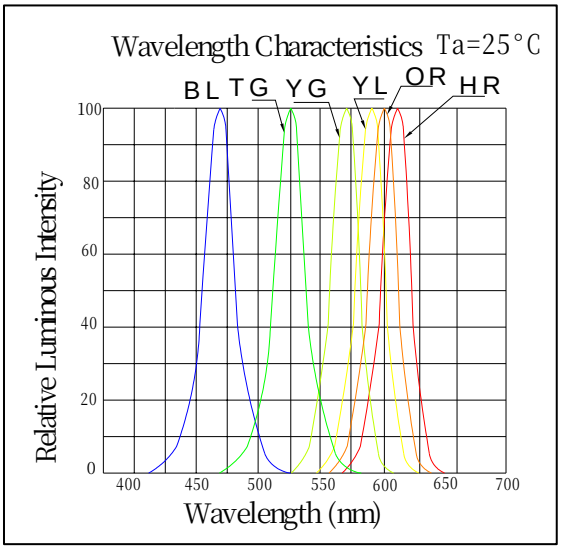

■ Recommended Soldering Temperature – Time Profile (Reflow Soldering)

Surface Mounting Condition

In automatic mounting of the SMD LEDs on printed circuit boards, any bending, expanding and pulling forces or shock against the SMD LEDs should be kept min. to prevent them from electrical failures and mechanical damages of the devices.

Soldering Reflow

-Soldering of the SMD LEDs should conform to the soldering condition in the individual specifications.
-SMD LEDs are designed for Reflow Soldering.
-In the reflow soldering, too high temperature and too large temperature gradient such as rapid heating/cooling may cause electrical & optical failures and damages of the devices.
-We cannot guarantee the LEDs after they have been assembled using the solder dipping method.

1) Lead Solder

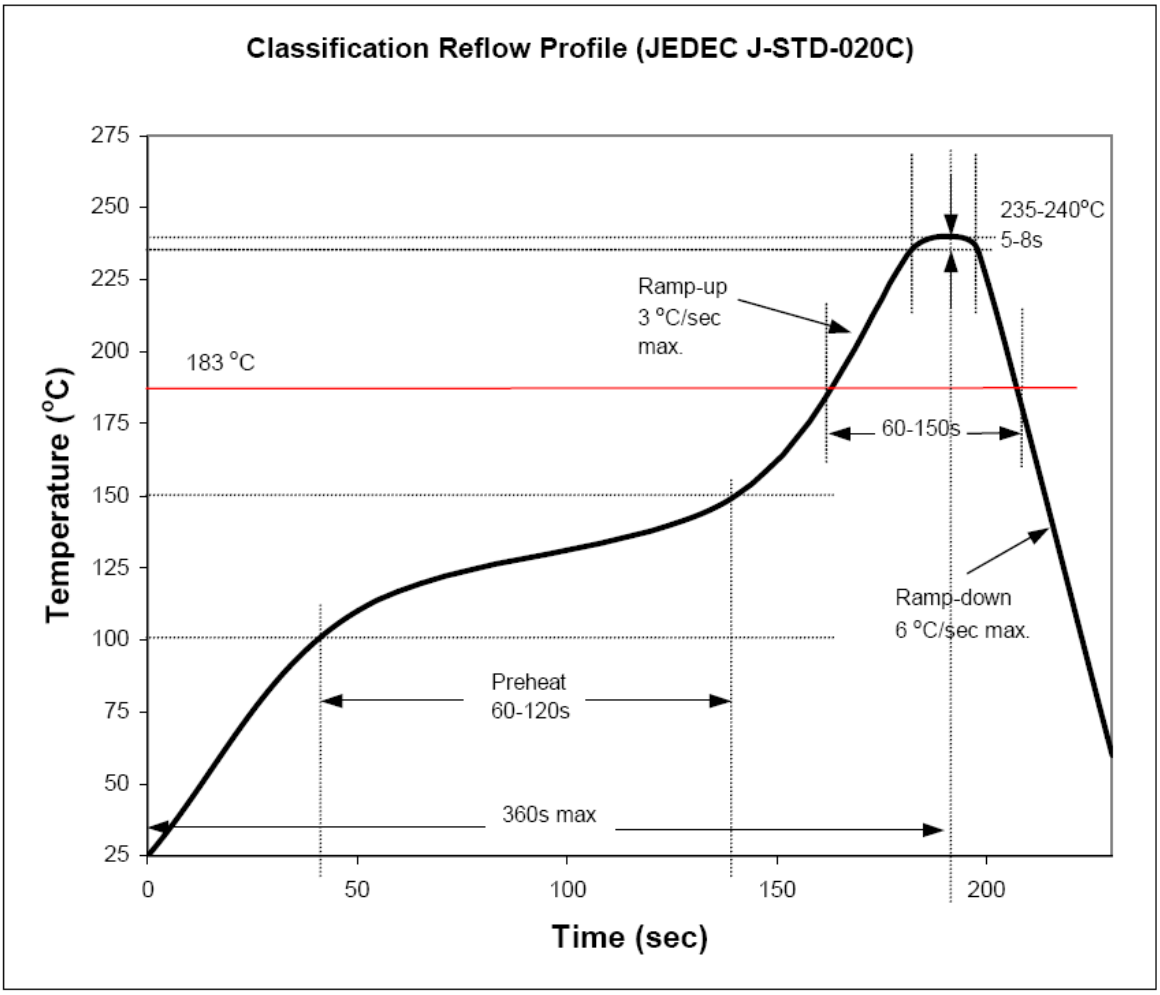

2) Lead-Free Solder

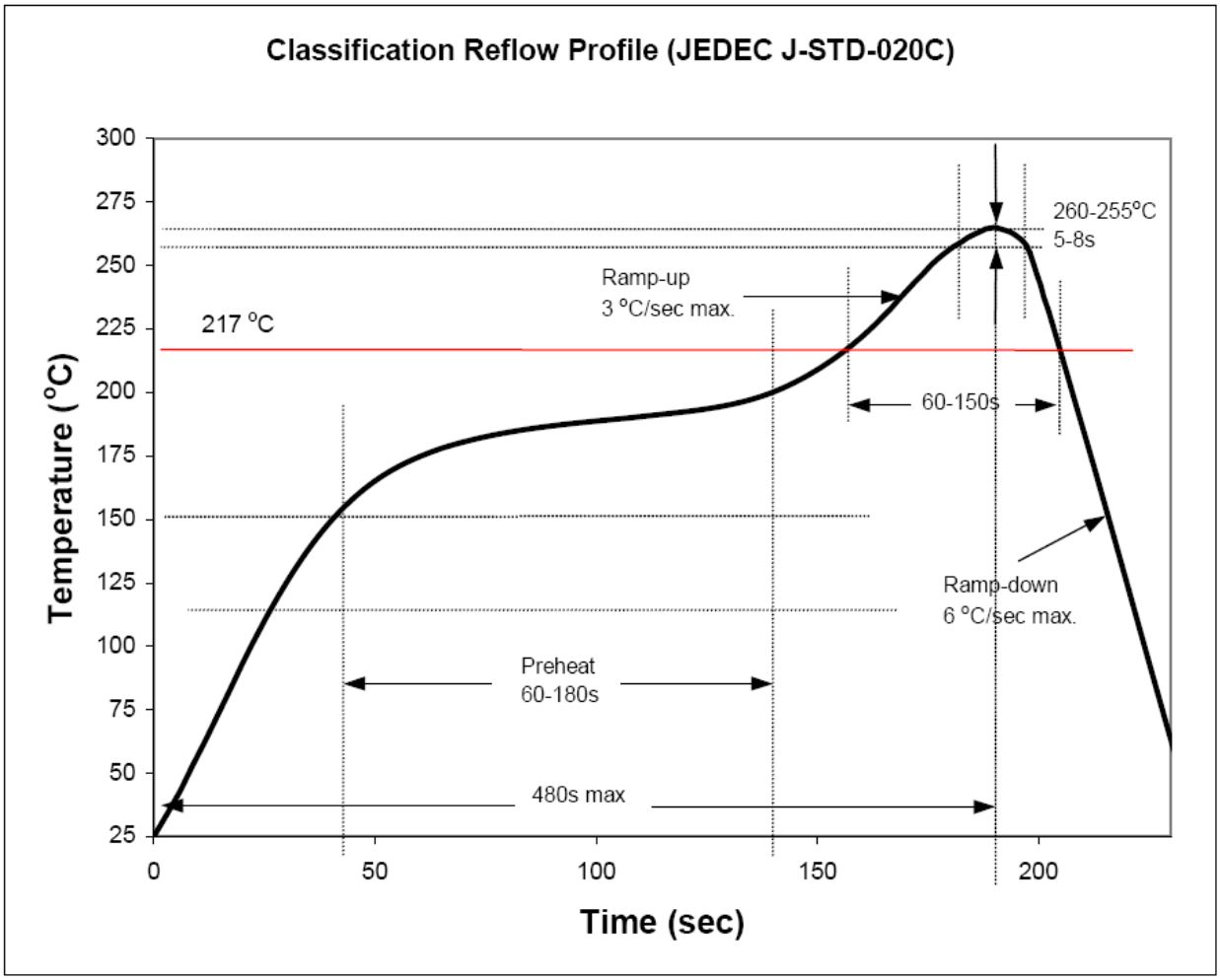

3) Manual Soldering conditions.

- Lead Solder

Max. 300 for Max. 3sec, and only one time. ℃

- Lead-free Solder

Max. 350 for Max. 3sec, and only one time. ℃

- There is possibility that the brightness of LEDs is decreased, which is influenced by heat or ambient atmosphere during reflow. It is recommended to use the nitrogen reflow method.
- After LEDs have been soldered, repair should not be done. As repair is unavoidable, a double-head soldering iron should be used. It should be confirmed beforehand whether the characteristics of the LEDs will be damaged by repairing or not.
- Reflow soldering should not be done more than two times.

■ Material

True green：

	Material
1. Lead-frame. / Soldering Leads	Cu Alloy With Ni, Au Plating.
2. PCB	BT Resin.
3. Encapsulant	Epoxy Resin.
4. Die	InGaN based
5. Zener diode	Si
6. Bonding wire	Au Chip : Ball Bonding / PCB : Ball Bonding

Note: Product is lead-free (Pb free).

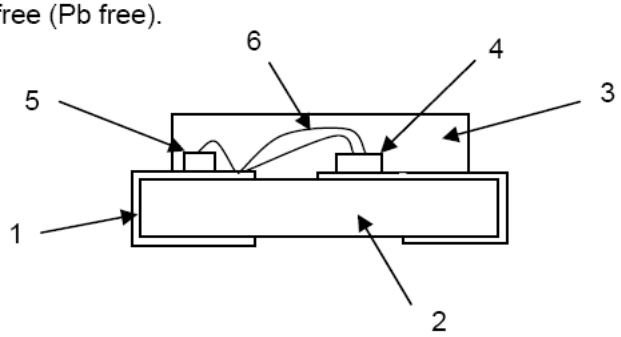

White/ Blue/ Yellow green/ Yellow/ Orange/ Red：

	Material
1. Lead-frame. / Soldering Leads	Cu Alloy With Ni, Au Plating.
2. PCB	BT Resin.
3. Encapsulate	Epoxy Resin.
4. Die	AlInGaP based
5. Bonding wire	Au Chip : Ball Bonding / PCB : Ball Bonding

Note: Product is lead-free (Pb free).

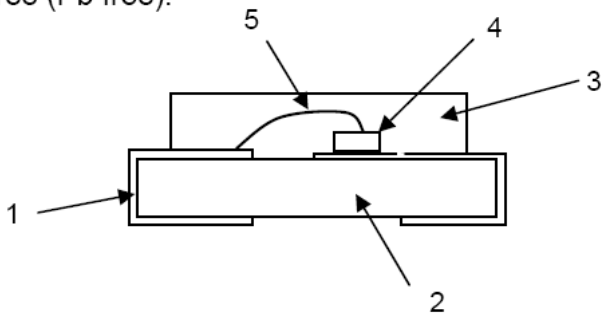

■ Taping and Orientation.

Quantity: **4,000** units/reel
Diameter: 178 mm
General Tolerance : ± 0.1

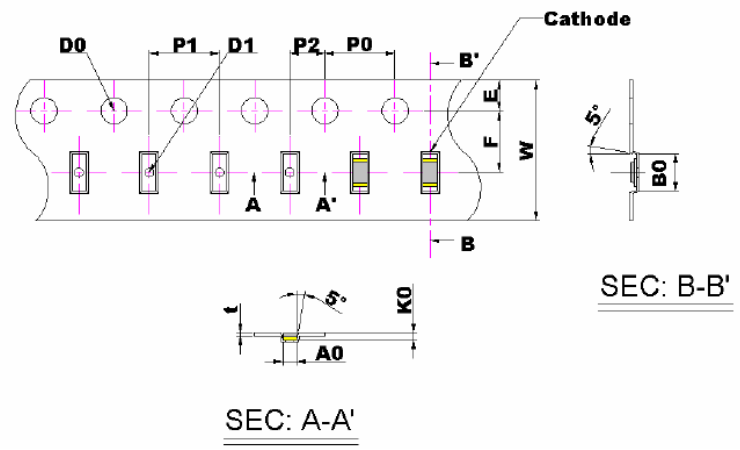

Item	Spec	Tol.(+/-)		Item	Spec	Tol.(+/-)
W	8.00	±0.20		P2	2.00	±0.05
E	1.75	±0.10		t	0.20	±0.05
F	3.50	±0.05		A0	0.95	±0.05
D0	1.50	+0.10/-0		B0	1.85	±0.05
D1	0.50	±0.08		K0	0.50	±0.05
P0	4.00	±0.1				
P1	4.00	±0.1				

Unit : mm

■ Cautions:

1. After open the package, the LED should be kept at 30°C, 30%RH or less. The LED should be soldered within 24 hours (1 day) after opening the package.
2. Heat generation must be taken into design consideration when using the LED.
3. Power must be applied resistors for protection, over current would be caused the optic damage to the devices and wavelength shift.
4. Manual tip solder may cause the damage to Chip devices, so advised that heat of iron should be lower than 15W with temperature control under 5 seconds at 230-260 deg. C. (The device would be got damage in re working process, recommended under 5 seconds at 230-260 deg. C)
5. All equipment and machinery must be properly grounded. It is recommended to use a wristband or anti-electrostatic glove when handing the LED.
6. Use IPA as a solvent for cleaning the LED. The other solvent may dissolve the LED package and the epoxy, Ultrasonic cleaning should not be done.
7. Damaged LED will show unusual characteristics such as leak current remarkably increase, turn-on voltage becomes lower and the LED get unlight at low current.

■ **Reliability Test :**

	Test Item	Test Conditions	Time	Test Q'ty	Fail Q'ty	O.K
1	Thermal Cycle Test (168 cycles)	H:+75°C 30 min ~ L:-35°C 30 min	168 Hrs	20	0	Pass
2	Thermal Shock Test (84 cycles, Rate= 5min)	H:+85°C (Holding 1 hr) ~ L:-40°C (Holding 1 hr)	168 Hrs	20	0	Pass
3	High Temp. Storage Test	Temp.:100°C	168 Hrs	20	0	Pass
4	Low Temp. Storage Test	Temp.:-40°C	168 Hrs	20	0	Pass
5	High Temp. High Humidity Test	85°C/85%RH,	168 Hrs	20	0	Pass
6	Press Cook Test	T=121°C, P=2atms H=100%RH	168 Hrs	20	0	Pass
7	Operating Life Test	IF=20 mA, 25°C	168 Hrs	20	0	Pass
8	IR-Reflow Test	Max 260°C (Pb free condition)	2 Times	10	0	Pass

Conclusions:

The reliability tests were designed to evaluate both package integrity as well as workability of product performance over time.

All samples have done well by completed test requirement and passed all the qualification criteria with zero failure. From design standpoint, the package is robust enough to meet its datasheet conditions.

Based on the good result shows on the above test, this product is qualified and released for market.