SMD QUARTZ CRYSTAL OSCILLATOR 石 英 晶 体 振 荡 器

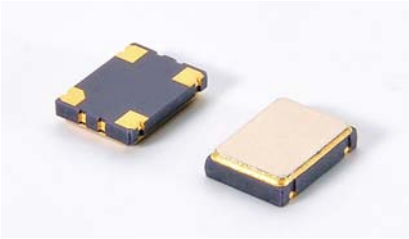

4 Pad Version 7.0×5.0 mm

- ±20 ppm type available
- Excellent Reliability Performance
- EMI shielding possible by grounded lid
- Reflow soldering temperature: 260℃ max
- Ceramic Seam Weld package

RoHS 2002/95/EC
RoHS compliant

★ PARAMETERS 技术参数

PARAMETERS	参数	SPECIFICATION 规格
Frequency Range	频率范围	1～125MHz
Supply voltage	工作电压	1.8V、2.5V、2.8V、3.3V、5.0V
Input Current	输入电流	See Below
Frequency Stability Overall	频率稳定性	±20ppm～±50ppm
Operating Temp. Range	工作温度范围	-10～+60℃ to -40～+85℃
Storage Temp. Range	储存温度范围	-55～+125℃
Output Load	输出负载	HCMOS/TTL（15pF~30pF/10TTL）
Symmetry	占空比	45% ~ 55% typ. (40% ~ 60% max.) at 0.5×Vdc
Start-up time	起振时间	10mS max
Enable/ Disable Function	三态控制	O/E or E/D

⊙ *All specification subject change without notice. 规格变化，恕不另行通知。*

★ FREQUENCY STABILITY VS. TEMPERATURE 频率温度特性

Operation Temperature Range	Frequency Stability			
	±20ppm	±25ppm	±30ppm	±50ppm
-10℃~+60℃	○	●	○	○
-20℃~+70℃		○	●	○
-40℃~+85℃		○	○	●

● standard ○ available

★ Rise & Fall TIME MAX. 上升/下降时间

Frequency	Rise & Fall Time	Note
1.0~9.9 MHz	6nS max	rise time:
10.0~39.9 MHz	5nS max	0.1 V_{DC} ~ 0.9 V_{DC}
40.0~69.9 MHz	4nS max	fall time:
70.0~125.0 MHz	3nS max	0.9 V_{DC} ~ 0.1 V_{DC}

★ DIMENSIONS& LAND PATTERN LAYOUT (Unit: mm) 外形尺寸

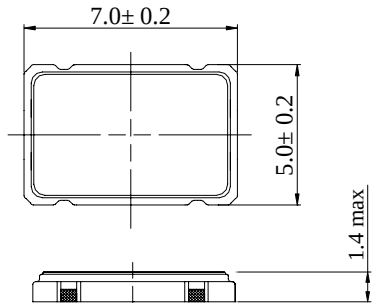

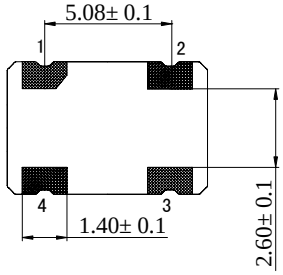

Pin	Connection
1	E/D
2	GND
3	Output
4	V_{DC}

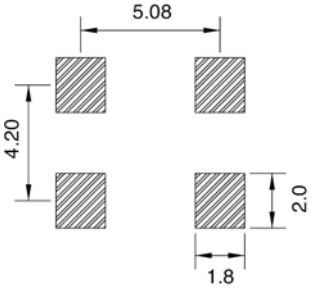

Recommended land Pattern

★ PART NUMBER GUIDE 部件号示例 *e.g. FXO12.000AA3.3SM3 (*SM3=3.2×2.5 SMD TYPE)*

	Quartz Crystal Oscillator 石英晶体振荡器	Frequency 频率	Frequency Stability 频率稳定度	Operating Temp. 工作温度	Supply voltage 工作电压	Package 盒型
F	XO	12.000	A	A	3.3	SM7

Address:Rm 1112-1117., Xinian Center. NO. 6021, Shennan Rd. Shenzhen Gaungdong 518040, China Tel:(86)755-83458718 Fax: (86)755-83459818 E-mial: sales@chinafronter.com

Definition	Description	Definition	Description
Frequency Stability 频率稳定度	**A**：±25ppm	Operating Temp. 工作温度	**A**：0~+70℃
	B：±50ppm		**B**：-20~+70℃
	C：±100ppm		**C**：-40~+85℃
	D: Customer specified		**D**: Customer specified

★ INPUT CURRENT 工作电流

Vdc=5.0V				Vdc=3.3V			
15pF load		30pF load		15pF load		30pF load	
1.0 ~ 19.9 MHz	12 mA	1.0 ~ 19.9 MHz	15 mA	1.0 ~ 19.9 MHz	8 mA	1.0 ~ 19.9 MHz	15 mA
20.0 ~ 39.9 MHz	20 mA	20.0 ~ 39.9 MHz	30 mA	20.0 ~ 39.9 MHz	15 mA	20.0 ~ 39.9 MHz	25 mA
40.0 ~ 59.9 MHz	30 mA	40.0 ~ 59.9 MHz	35 mA	40.0 ~ 59.9 MHz	25 mA	40.0 ~ 59.9 MHz	30 mA
60.0 ~ 79.9 MHz	45 mA	50.0 ~ 80.0 MHz	55 mA	60.0 ~ 79.9 MHz	35 mA	60.0 ~ 79.9 MHz	35 mA
80.0 ~ 125.0MHz	60 mA			80.0 ~ 125.0MHz	45 mA		

★ TAPING SPECIFICATION (Unit: mm) 编带规格

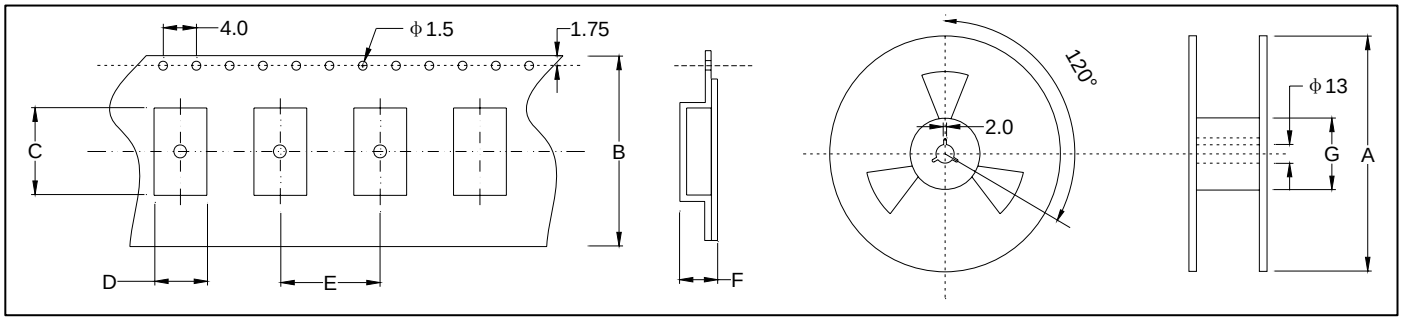

	A	B	C	D	E	F	G
OSC-SMD7050	178±2.0	16.0±0.3	7.40±0.15	5.40±0.15	8.0±0.1	2.2±0.1	60.5±1.0
1000 pcs per reel							

★ REFLOW SOLDERING PROFILE 回流焊特性

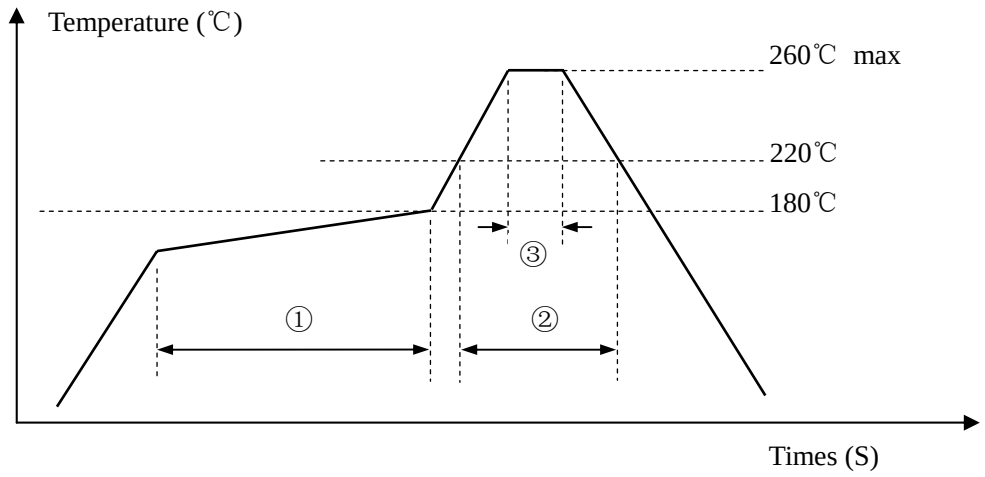

Pb free reflow A	①	Preheat	160~180℃	120sec. max
	②	Primary heat	220℃	60sec. max
	③	Peak	260℃	10sec. max.