Plug-in Signal Conditioners M-UNIT

OPTICAL RECEIVER

Functions & Features

• Isolation up to several hundred thousand volts with a fiber optics cable
• High-density mounting

Typical Applications

• Ion implanter
• Electron-beam devices
• Dust chamber
• Protection against inductive noises in power substations

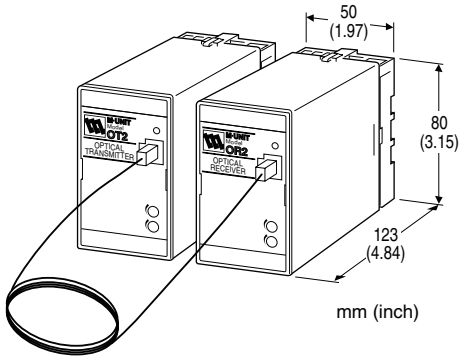

MODEL: OR2–[1]–[2][3]

ORDERING INFORMATION

• Code number: OR2-[1]-[2][3]
Specify a code from below for each of [1] through [3].
(e.g. OR2-A-B/Q)
• Special output range (For codes Z & 0)
• Specify the specification for option code /Q
(e.g. /C01/S01)

[1] OUTPUT

Current

A: 4 – 20 mA DC (Load resistance 750 Ω max.)
B: 2 – 10 mA DC (Load resistance 1500 Ω max.)
C: 1 – 5 mA DC (Load resistance 3000 Ω max.)
D: 0 – 20 mA DC (Load resistance 750 Ω max.)
E: 0 – 16 mA DC (Load resistance 900 Ω max.)
F: 0 – 10 mA DC (Load resistance 1500 Ω max.)
G: 0 – 1 mA DC (Load resistance 15 kΩ max.)
Z: Specify current (See OUTPUT SPECIFICATIONS)

Voltage

1: 0 – 10 mV DC (Load resistance 10 kΩ min.)
2: 0 – 100 mV DC (Load resistance 100 kΩ min.)
3: 0 – 1 V DC (Load resistance 100 Ω min.)
4: 0 – 10 V DC (Load resistance 1000 Ω min.)
5: 0 – 5 V DC (Load resistance 500 Ω min.)
6: 1 – 5 V DC (Load resistance 500 Ω min.)
4W: -10 – +10 V DC (Load resistance 2000 Ω min.)
0: Specify voltage (See OUTPUT SPECIFICATIONS)

[2] POWER INPUT

AC Power

B: 100 V AC
C: 110 V AC
D: 115 V AC
F: 120 V AC
G: 200 V AC
H: 220 V AC
J: 240 V AC

DC Power

S: 12 V DC
R: 24 V DC

[3] OPTIONS

blank: none
/Q: With options (specify the specification)

SPECIFICATIONS OF OPTION: Q (multiple selections)

COATING (For the detail, refer to M-System's web site.)

/C01: Silicone coating
/C02: Polyurethane coating
/C03: Rubber coating

TERMINAL SCREW MATERIAL

/S01: Stainless steel

RELATED PRODUCTS

• Optical transmitter (model: OT2)
• Fiber optics cable:
10 meters (model: AMPCP2-10M)
20 meters (model: AMPCP2-20M)
30 meters (model: AMPCP2-30M)
Optical cable used for the AMPCP2
Mitsubishi Chemical Super Eska SH 4001
Minimum bend radius: 25 mm
Tension strength: ≤ 70 N
Connector used for the AMPCP2
Broadcom HFBR-4532Z

GENERAL SPECIFICATIONS

Construction: Plug-in
Transmission method: Light pulse (100 – 500 Hz)
Maximum transmission distance: 30 meters (98 ft)
Connection
Output & power input: M3.5 screw terminals
Optical fiber: Connector
Screw terminal: Chromated steel (standard) or stainless steel
Housing material: Flame-resistant resin (black)
Isolation: Output to power
Overrange output: Approx. -10 to +120 % at 1 – 5 V
Zero adjustment: -5 to +5 % (front)
Span adjustment: 95 to 105 % (front)
Power indicator LED: Green LED turns on when the power is supplied.

OUTPUT SPECIFICATIONS

■ **DC Current**: 0 – 20 mA DC
Minimum span: 1 mA
Offset: Max. 1.5 times span
Load resistance: Output drive 15 V max.
■ **DC Voltage**: -10 – +12 V DC
Minimum span: 5 mV
Offset: Max. 1.5 times span
Load resistance: Output drive 10 mA max.; 5 mA for negative voltage output; at ≥ 0.5 V

INSTALLATION

Power input
•**AC**: Operational voltage range: rating ±10 %, 50/60 ±2 Hz, approx. 3 VA
•**DC**: Operational voltage range: rating ±10 %, ripple 10 %p-p max., approx. 2 W (80 mA at 24 V)
Operating temperature: -5 to +60°C (23 to 140°F)
Operating humidity: 30 to 90 %RH (non-condensing)
Mounting: Surface or DIN rail
Weight: 400 g (0.88 lb)

PERFORMANCE in percentage of span

Accuracy: ±0.3 % (Overall performance with the OT2 and OR2 combined)
Temp. coefficient: ±0.015 %/°C (±0.008 %/°F)
Response time: ≤ 0.6 second (0 – 90 %) (Overall performance with the OT2 and OR2 combined)
Line voltage effect: ±0.1 % over voltage range
Insulation resistance: ≥ 100 MΩ with 500 V DC
Dielectric strength: 2000 V AC @ 1 minute (output to power to ground)

EXTERNAL VIEW

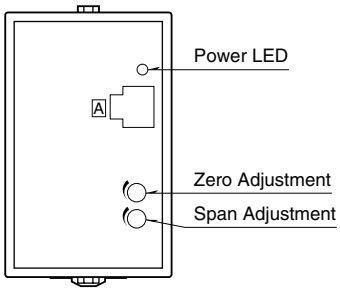

EXTERNAL DIMENSIONS & TERMINAL ASSIGNMENTS unit: mm (inch)

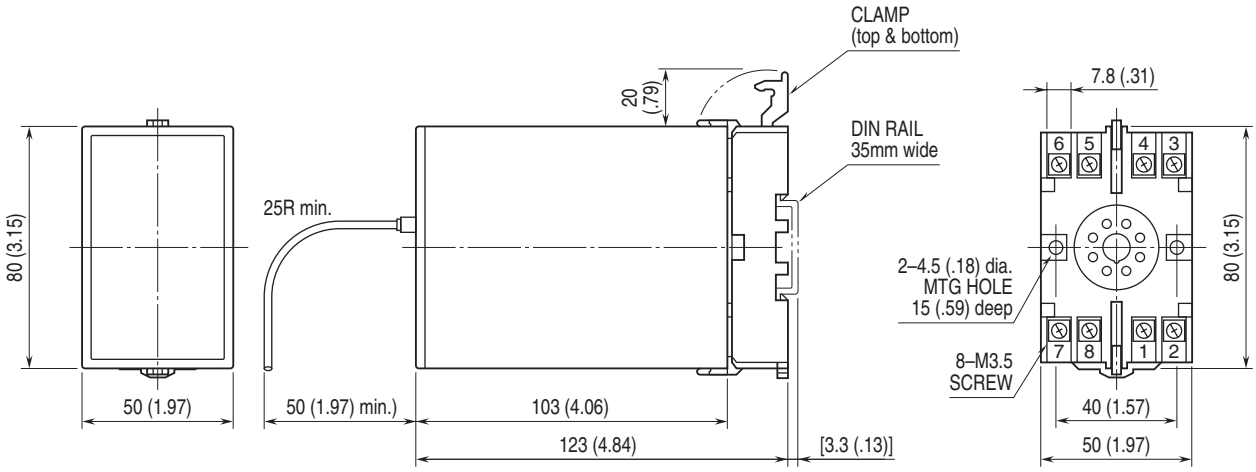

• When mounting, no extra space is needed between units.

SCHEMATIC CIRCUITRY & CONNECTION DIAGRAM

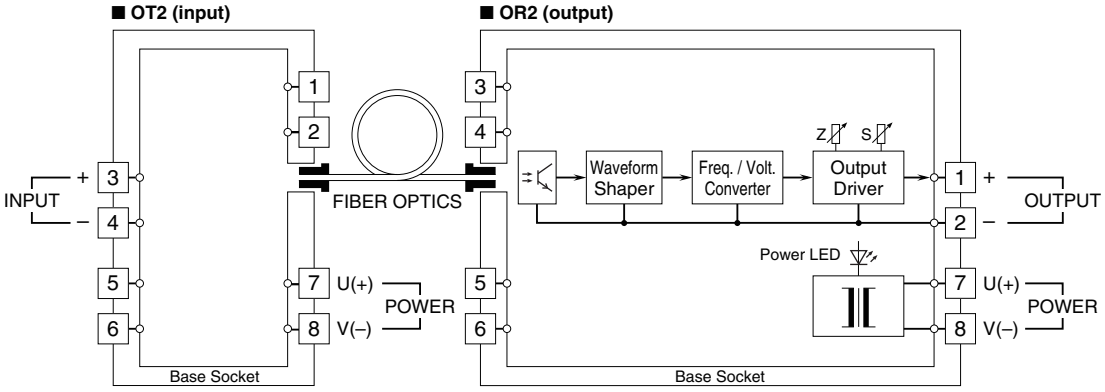

⚠ Specifications are subject to change without notice.