4:1 High-Speed Multiplexer

Check for Samples: OPA4872

FEATURES

- **500MHz SMALL-SIGNAL BANDWIDTH**
- **500MHz, 2V_{PP} BANDWIDTH**
- **0.1dB GAIN FLATNESS to 120MHz**
- **10ns CHANNEL SWITCHING TIME**
- **LOW SWITCHING GLITCH: 40mV_{PP}**
- **2300V/µs SLEW RATE**
- **0.035%/0.005° DIFFERENTIAL GAIN, PHASE**
- **QUIESCENT CURRENT = 10.6mA**
- **1.1mA QUIESCENT CURRENT IN SHUTDOWN MODE**
- **88dB OFF ISOLATION IN DISABLE OR SHUTDOWN (10MHz)**

APPLICATIONS

- **VIDEO ROUTER**
- **LCD AND PLASMA DISPLAY**
- **HIGH SPEED PGA**
- **DROP-IN UPGRADE TO AD8174**

DESCRIPTION

The OPA4872 offers a very wideband 4:1 multiplexer in an SO-14 package. Using only 10.6mA, the OPA4872 provides a user-settable output amplifier gain with greater than 500MHz large-signal bandwidth (2V_{PP}). The switching glitch is improved over earlier solutions using a new (patented) input stage switching approach. This technique uses current steering as the input switch while maintaining an overall closed-loop design. The OPA4872 exhibits an off isolation of 88dB in either Disable or Shutdown mode. With greater than 500MHz small-signal bandwidth at a gain of 2, the OPA4872 gives a typical 0.1dB gain flatness to greater than 120MHz.

System power may be optimized using the chip enable feature for the OPA4872. Taking the chip enable ($\overline{EN}$) line high powers down the OPA4872 to less than 3.4mA total supply current. Further power reduction to 1.1mA quiescent current can be achieved by bringing the shutdown (SD) line high. Muxing multiple OPA4872s outputs together, then using the chip enable to select which channels are active, increases the number of possible inputs.

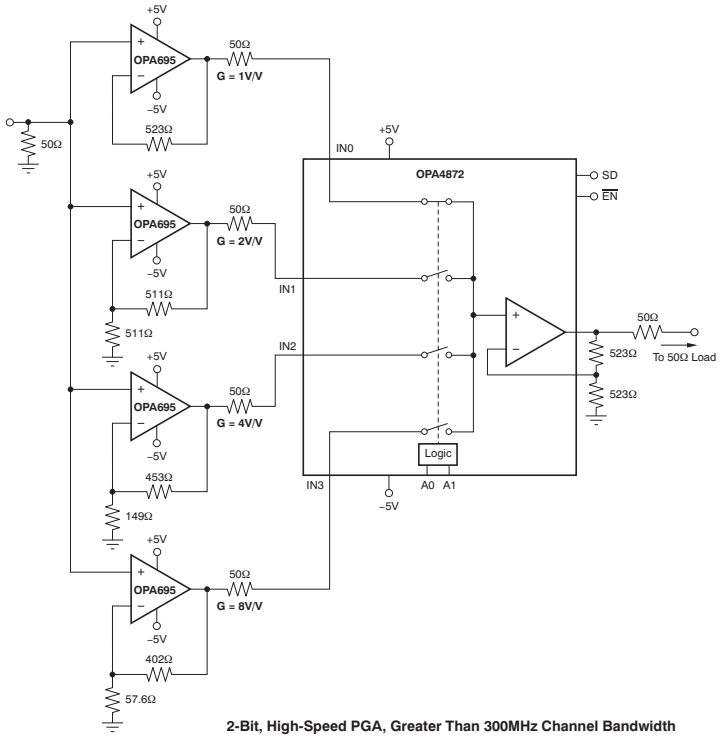

2-Bit, High-Speed PGA, Greater Than 300MHz Channel Bandwidth

Please be aware that an important notice concerning availability, standard warranty, and use in critical applications of Texas Instruments semiconductor products and disclaimers thereto appears at the end of this data sheet.

All trademarks are the property of their respective owners.

PRODUCTION DATA information is current as of publication date. Products conform to specifications per the terms of the Texas Instruments standard warranty. Production processing does not necessarily include testing of all parameters.

Copyright © 2007–2011, Texas Instruments Incorporated

This integrated circuit can be damaged by ESD. Texas Instruments recommends that all integrated circuits be handled with appropriate precautions. Failure to observe proper handling and installation procedures can cause damage.

ESD damage can range from subtle performance degradation to complete device failure. Precision integrated circuits may be more susceptible to damage because very small parametric changes could cause the device not to meet its published specifications.

Table 1. ORDERING INFORMATION(1)

PRODUCT	PACKAGE-LEAD	PACKAGE DESIGNATOR	SPECIFIED TEMPERATURE RANGE	PACKAGE MARKING	ORDERING NUMBER	TRANSPORT MEDIA, QUANTITY
OPA4872	SO-14	D	–40°C to +85°C	OPA4872	OPA4872ID	Rails, 50
					OPA4872IDR	Tape and Reel, 2500

(1) For the most current package and ordering information, see the Package Option Addendum at the end of this document, or visit the device product folder at www.ti.com.

ABSOLUTE MAXIMUM RATINGS(1)

Over operating free-air temperature range, unless otherwise noted.

		OPA4872	UNIT
Power supply		±6.5	V
Internal power dissipation		See Thermal Characteristics	
Input voltage range		$\pm V_S$	V
Storage temperature range		–65 to +125	°C
Junction temperature (T_J)		+150	°C
Junction temperature: continuous operation, long-term reliability		+140	°C
ESD rating	Human body model (HBM)	1300	V
	Charged device model (CDM)	1000	V
	Machine model (MM)	200	V

(1) Stresses above these ratings may cause permanent damage. Exposure to absolute maximum conditions for extended periods may degrade device reliability. These are stress ratings only, and functional operation of the device at these or any other conditions beyond those specified is not implied.

PIN CONFIGURATION

D PACKAGE
SO-14
(TOP VIEW)

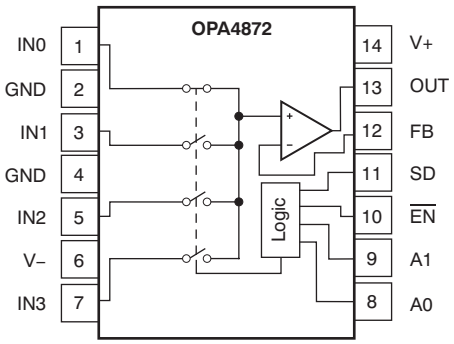

Copyright © 2007–2011, Texas Instruments Incorporated

ELECTRICAL CHARACTERISTICS: V_S = ±5V

At T_A = +25°C, G = +2V/V, R_F = 523Ω, and R_L = 150Ω, unless otherwise noted.

PARAMETER	CONDITIONS	OPA4872 TYP +25°C	OPA4872 MIN/MAX OVER TEMPERATURE +25°C(2)	0°C to +70°C(3)	–40°C to +85°C(3)	UNITS	MIN/ MAX	TEST LEVEL(1)
AC PERFORMANCE								
Small-signal bandwidth	V_O = 500mV$_{PP}$, R_L = 150Ω	500	375	360	355	MHz	min	B
Bandwidth for 0.1dB flatness	V_O = 500mV$_{PP}$, R_L = 150Ω	120				MHz	typ	C
Large-signal bandwidth	V_O = 2V$_{PP}$, R_L = 150Ω	500	400	370	350	MHz	min	B
Slew rate	4V step	2300	2150	2025	2000	V/µs	min	B
Rise time and fall time	4V step	1.25	1.4	1.45	1.5	ns	max	B
Settling time to 0.05%	2V step	15				ns	typ	C
to 0.1%	2V step	14	17	17.5	18	ns	max	B
Channel switching time		10	12	12.5	13	ns	max	B
Harmonic distortion	G = +2V/V, f = 10MHz, V_O = 2V$_{PP}$							
2nd-harmonic	R_L = 150Ω	–60	–56	–52	–50	dBc	max	B
3rd-harmonic	R_L = 150Ω	–78	–75	–72	–70	dBc	max	B
Input voltage noise	f > 100kHz	4.5	5.4	5.8	6.2	nV/√Hz	max	B
Noninverting input current noise	f > 100kHz	4.0	4.8	5.0	5.2	pA/√Hz	max	B
Inverting input current noise	f > 100kHz	19	22	23	24	pA/√Hz	max	B
Differential gain	G = +2V/V, PAL, V_O = 1.4V$_P$	0.035				%	typ	C
Differential phase	G = +2V/V, PAL, V_O = 1.4V$_P$	0.005				°	typ	C
All hostile crosstalk, input-referred	Three channels driven at 5MHz, 1V$_{PP}$	–80				dB	typ	C
	Three channels driven at 30MHz, 1V$_{PP}$	–66				dB	typ	C
DC PERFORMANCE								
Open-loop transimpedance (Z_{OL})	V_O = 0V, R_L = 100Ω	103	**92**	90	86	kΩ	min	A
Input offset voltage	V_{CM} = 0V	±1	**±5**	±5.7	±6.3	mV	max	A
Average Input offset voltage drift	V_{CM} = 0V			±15	±20	µV/°C	max	B
Input offset voltage matching	V_{CM} = 0V	±1	**±5**	±5.5	±6	mV	max	A
Noninverting input bias current	V_{CM} = 0V	±4	**±14**	±14.7	±15.3	µA	max	A
Average noninverting input bias current	V_{CM} = 0V			±15	±20	nA/°C	max	B
Inverting bias current	V_{CM} = 0V	±4	**±18**	±21.4	±22.9	µA	max	A
Average inverting input bias current	V_{CM} = 0V			±75	±75	nA/°C	max	B
INPUT								
Common-mode input range (CMIR)	Each noninverting input	±2.7	**±2.55**	±2.5	±2.45	V	min	A
Common-mode rejection ratio (CMRR)	V_{CM} = 0V, input-referred, noninverting input	56	**50**	49	48	dB	min	A
Input resistance								
Noninverting	Channel enabled	2.5				MΩ	typ	C
Inverting	open loop	70				Ω	typ	C
Input capacitance								
Noninverting	Channel selected	0.9				pF	typ	C
	Channel deselected	0.9				pF	typ	C
	Chip disabled	0.9				pF	typ	C
OUTPUT								
Output voltage swing	R_L ≥ 1kΩ	±4	**±3.9**	±3.85	±3.8	V	min	A
	R_L = 150Ω	±3.7	**±3.55**	±3.5	±3.45	V	min	A
Output current	V_O = 0V	±75	**±48**	±47	±45	mA	min	A
Short-circuit output current	Output shorted to ground	±100				mA	typ	C
Closed-Loop output impedance	G = +2V/V, f ≤ 100kHz	0.03				Ω	typ	C

(1) Test levels: (A) 100% tested at +25°C. Over temperature limits set by characterization and simulation. (B) Limits set by characterization and simulation. (C) Typical value only for information.
(2) Junction temperature = ambient for +25°C tested specifications.
(3) Junction temperature = ambient at low temperature limit; junction temperature = ambient +9°C at high temperature limit for over temperature specifications.

Copyright © 2007–2011, Texas Instruments Incorporated

ELECTRICAL CHARACTERISTICS: V_S = ±5V (continued)

At T_A = +25°C, G = +2V/V, R_F = 523Ω, and R_L = 150Ω, unless otherwise noted.

		OPA4872						
		TYP	MIN/MAX OVER TEMPERATURE					
PARAMETER	CONDITIONS	+25°C	+25°C[2]	0°C to +70°C[3]	–40°C to +85°C[3]	UNITS	MIN/ MAX	TEST LEVEL[1]
ENABLE ($\overline{EN}$)								
Power-down supply current	$V_{\overline{EN}}$ = 0V	3.4	**3.6**	3.8	3.9	mA	max	A
Disable time	V_{IN} = ±0.25V_{DC}	25				ns	typ	C
Enable time	V_{IN} = ±0.25V_{DC}	6				ns	typ	C
Off isolation	G = +2V/V, f = 10MHz	88				dB	typ	C
Output resistance in disable		14				MΩ	typ	C
Output capacitance in disable		2.5				pF	typ	C
DIGITAL INPUTS								
Maximum logic 0	A0, A1, $\overline{EN}$, SD		0.8	0.8	0.8	V	max	B
Minimum logic 1	A0, A1, $\overline{EN}$, SD		2.0	2.0	2.0	V	min	B
Logic input current	A0 , A1, $\overline{EN}$, SD, input = 0V each line	32	**40**	45	50	µA	max	A
Output switching glitch	Channel selection, at matched load	±20				mV	typ	C
	Channel disable, at matched load	±40				mV	typ	C
	Shutdown, at matched load	±40				mV	typ	C
SHUTDOWN								
Shutdown supply current	V_{SD} = 0V	1.1	**1.3**	1.4	1.5	mA	max	A
Shutdown time	V_{IN} = ±0.25V_{DC}	75				ns	typ	C
Enable time	V_{IN} = ±0.25V_{DC}	15				ns	typ	C
Off isolation	G = +2V/V, f = 10MHz	88				dB	typ	C
Output resistance in shutdown		14				MΩ	typ	C
Output capacitance in shutdown		2.5				pF	typ	C
POWER SUPPLY								
Specified operating voltage		±5				V	typ	C
Minimum operating voltage			±3.5	±3.5	±3.5	V	min	B
Maximum operating voltage			**±6.0**	±6.0	±6.0	V	max	A
Maximum quiescent current	V_S = ±5V	10.6	**11**	11.5	11.7	mA	max	A
Minimum quiescent current	V_S = ±5V	10.6	**10**	9.5	9.3	mA	min	A
Power-supply rejection ratio (+PSRR)	Input-referred	–56	**–50**	–49	–48	dB	min	A
Power-supply rejection ratio (–PSRR)	Input-referred	–57	**–51**	–50	–49	dB	min	A
THERMAL CHARACTERISTICS								
Specified operating range, D package		–40 to +85				°C	typ	C
Thermal resistance, θ_{JA}	Junction-to-ambient							
D SO-14		80				°C/W	typ	C

Copyright © 2007–2011, Texas Instruments Incorporated

TYPICAL CHARACTERISTICS

At T_A = +25°C, G = +2V/V, R_F = 523Ω, and R_L = 150Ω, unless otherwise noted.

SMALL-SIGNAL FREQUENCY RESPONSE

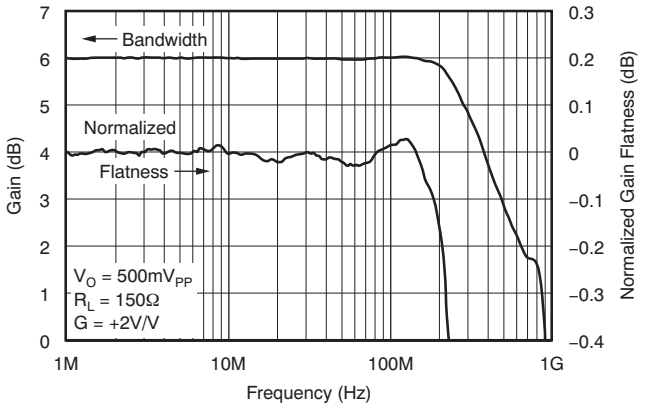

Figure 1.

SMALL-SIGNAL FREQUENCY RESPONSE

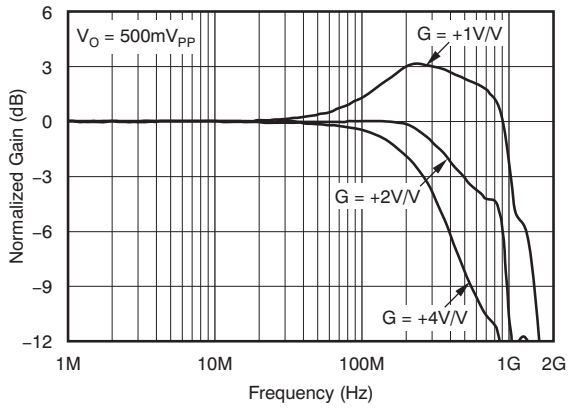

Figure 2.

LARGE-SIGNAL FREQUENCY RESPONSE

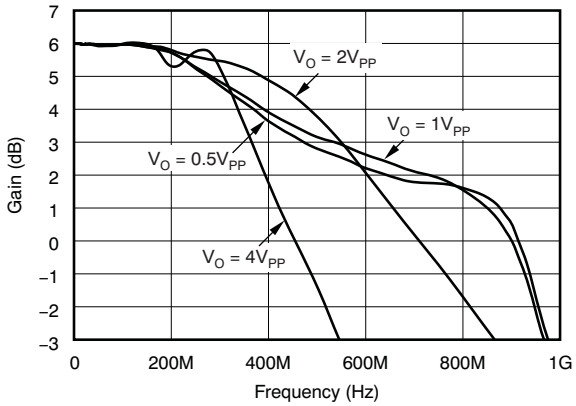

Figure 3.

NONINVERTING PULSE RESPONSE

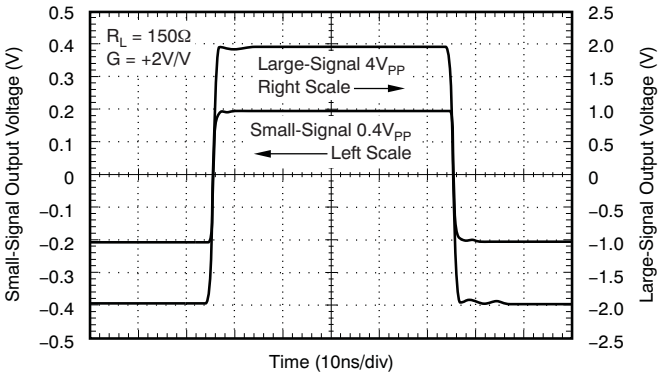

Figure 4.

RECOMMENDED R_S vs CAPACITIVE LOAD

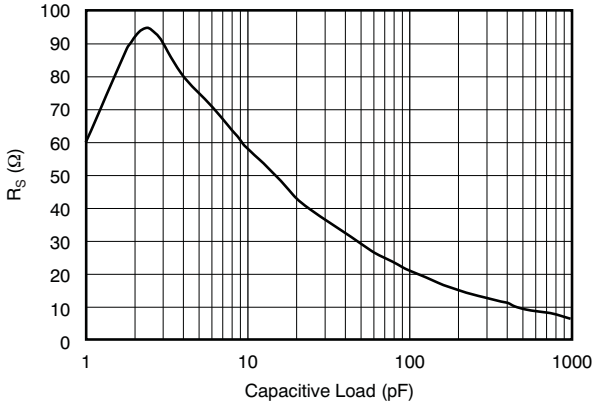

Figure 5.

FREQUENCY RESPONSE vs CAPACITIVE LOAD

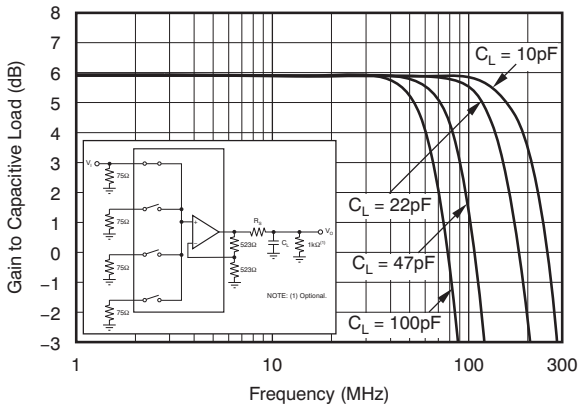

Figure 6.

TYPICAL CHARACTERISTICS (continued)

At T_A = +25°C, G = +2V/V, R_F = 523Ω, and R_L = 150Ω, unless otherwise noted.

HARMONIC DISTORTION vs LOAD RESISTANCE

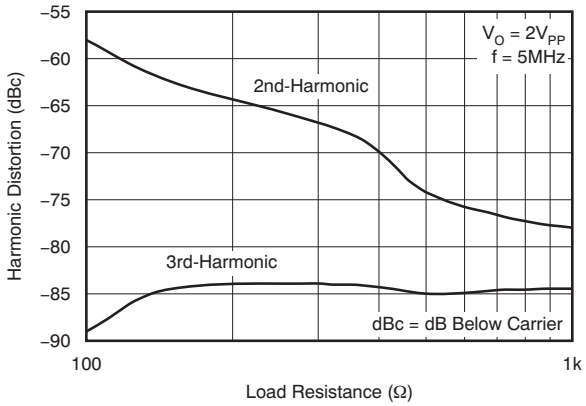

Figure 7.

HARMONIC DISTORTION vs SUPPLY VOLTAGE

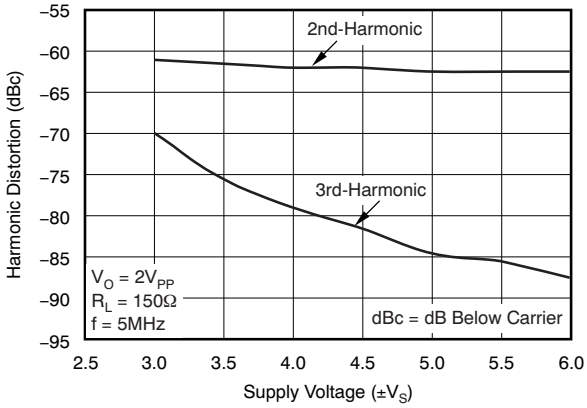

Figure 8.

HARMONIC DISTORTION vs FREQUENCY

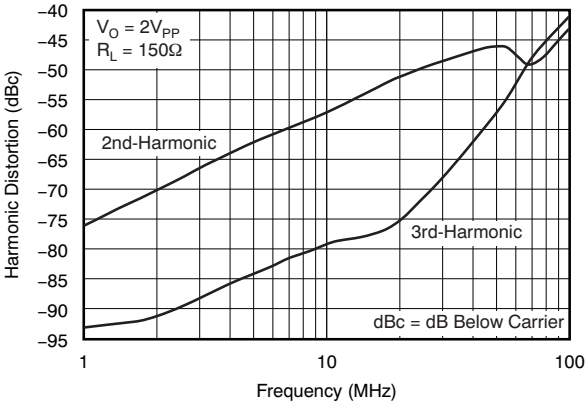

Figure 9.

HARMONIC DISTORTION vs OUTPUT VOLTAGE

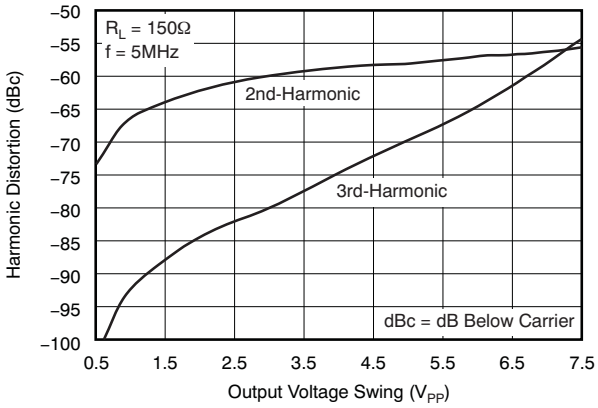

Figure 10.

OUTPUT VOLTAGE AND CURRENT LIMITATIONS

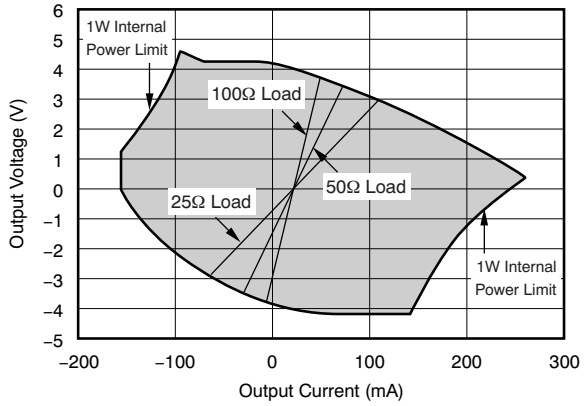

Figure 11.

DISABLE AND SHUTDOWN FEEDTHROUGH vs FREQUENCY

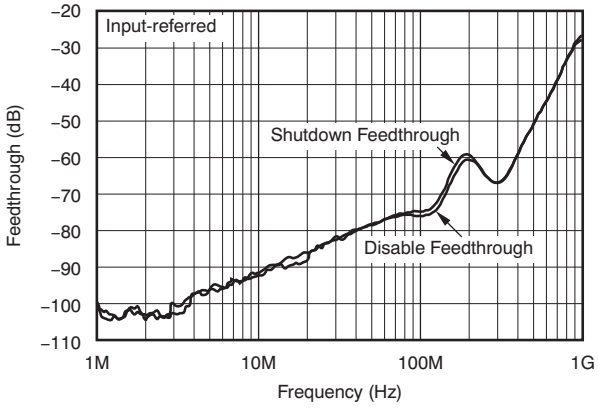

Figure 12.

Copyright © 2007–2011, Texas Instruments Incorporated

TYPICAL CHARACTERISTICS (continued)

At T_A = +25°C, G = +2V/V, R_F = 523Ω, and R_L = 150Ω, unless otherwise noted.

CHANNEL-TO-CHANNEL SWITCHING

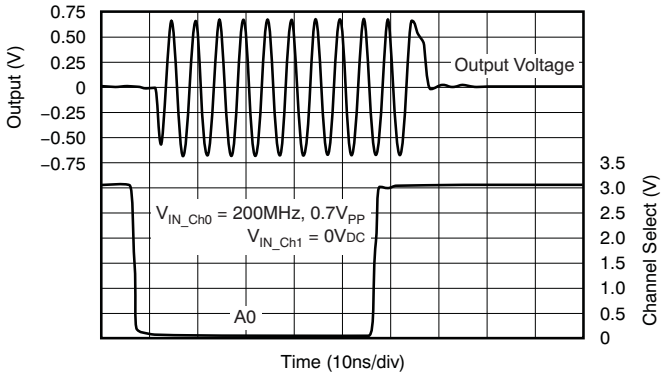

Figure 13.

CHANNEL-TO-CHANNEL SWITCHING GLITCH

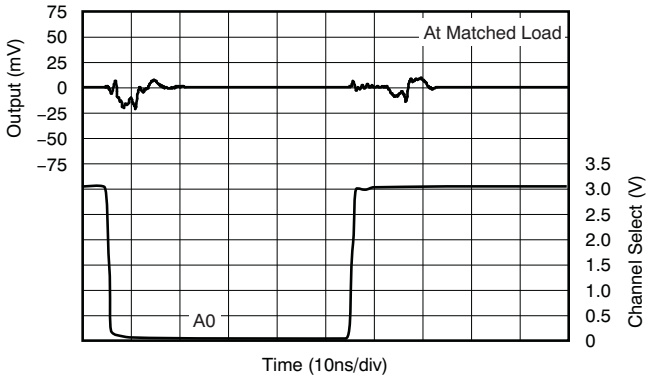

Figure 14.

DISABLE/ENABLE TIME

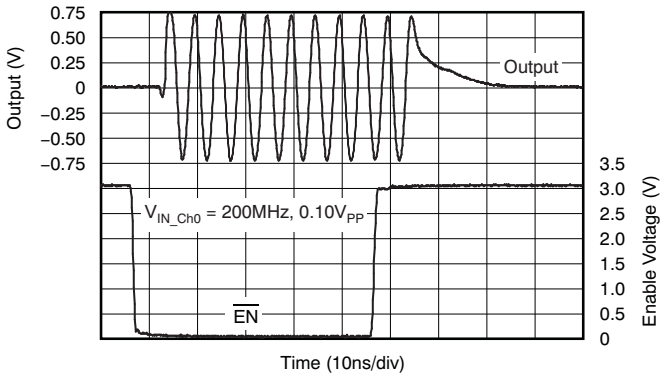

Figure 15.

DISABLE/ENABLE SWITCHING GLITCH

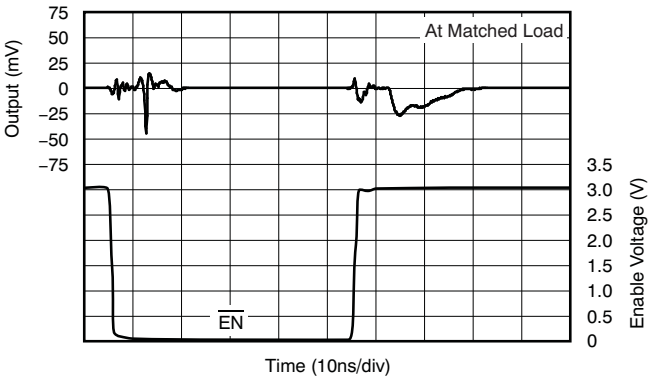

Figure 16.

SHUTDOWN/START-UP TIME

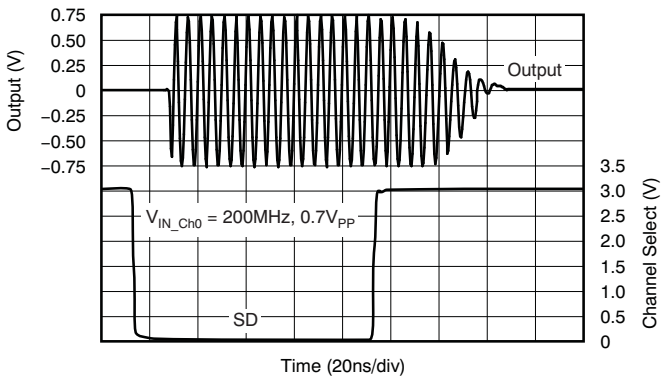

Figure 17.

SHUTDOWN GLITCH

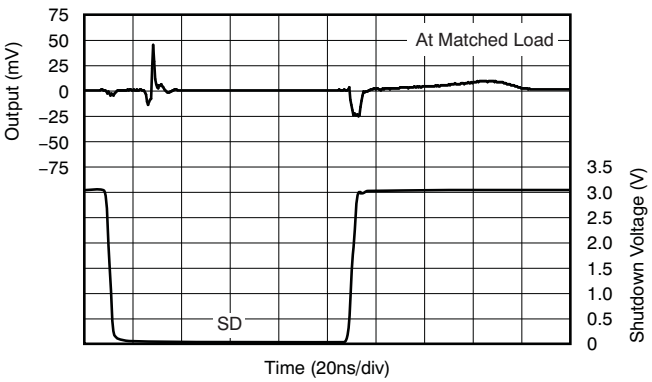

Figure 18.

Copyright © 2007–2011, Texas Instruments Incorporated

TYPICAL CHARACTERISTICS (continued)

At T_A = +25°C, G = +2V/V, R_F = 523Ω, and R_L = 150Ω, unless otherwise noted.

ALL HOSTILE CROSSTALK vs FREQUENCY

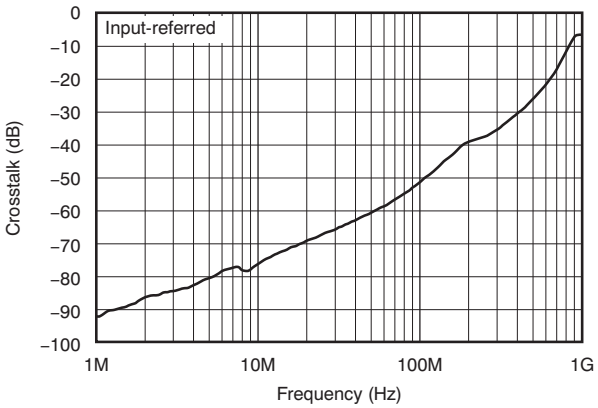

Figure 19.

OPEN-LOOP TRANSIMPEDANCE GAIN AND PHASE vs FREQUENCY

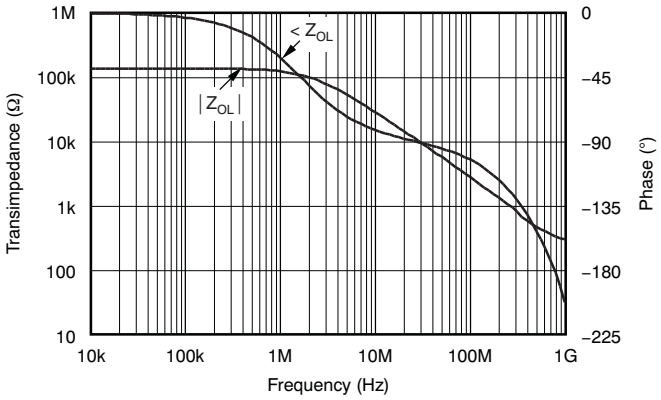

Figure 20.

CLOSED-LOOP OUTPUT IMPEDANCE vs FREQUENCY

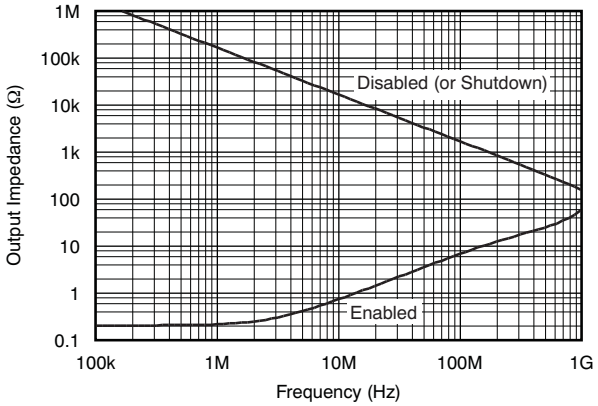

Figure 21.

INPUT IMPEDANCE vs FREQUENCY

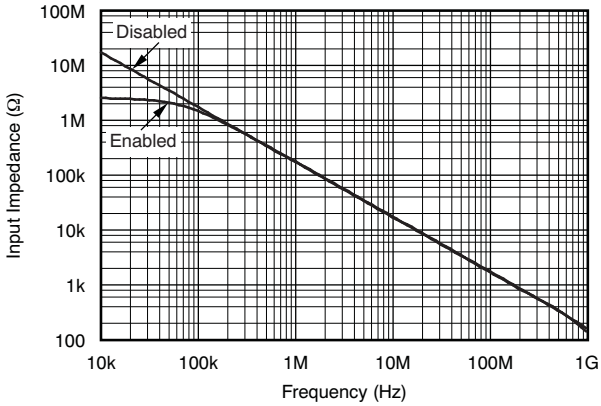

Figure 22.

PSRR vs FREQUENCY

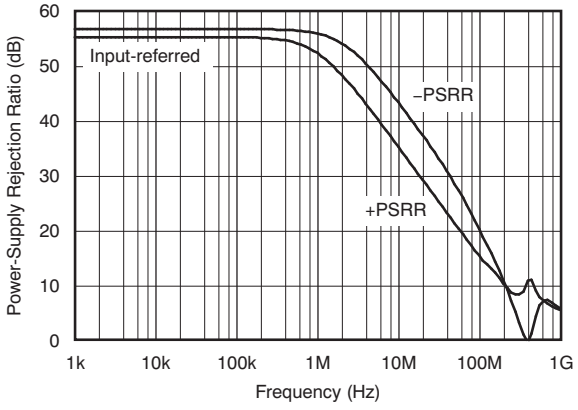

Figure 23.

OUTPUT AND SUPPLY CURRENT vs TEMPERATURE

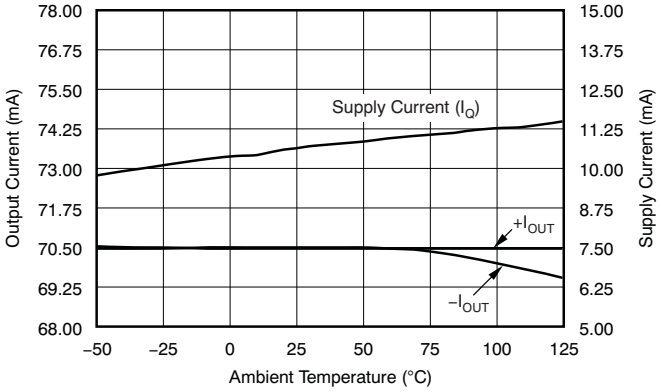

Figure 24.

Copyright © 2007–2011, Texas Instruments Incorporated

TYPICAL CHARACTERISTICS (continued)

At T_A = +25°C, G = +2V/V, R_F = 523Ω, and R_L = 150Ω, unless otherwise noted.

TYPICAL DC DRIFT OVER TEMPERATURE

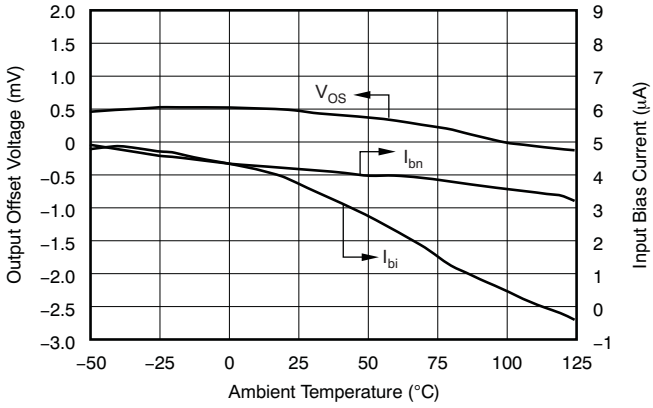

Figure 25.

INPUT VOLTAGE AND CURRENT NOISE

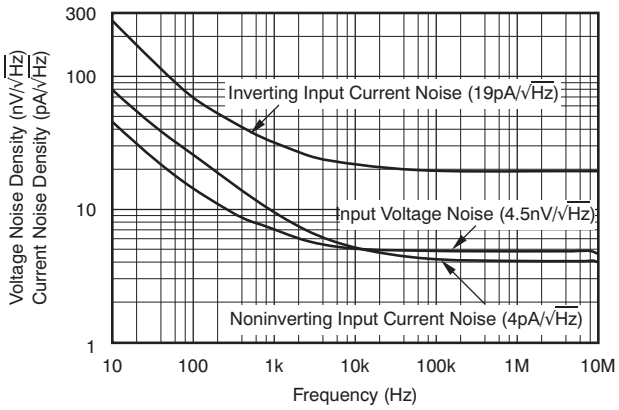

Figure 26.

Copyright © 2007–2011, Texas Instruments Incorporated

APPLICATION INFORMATION

WIDEBAND MULTIPLEXER OPERATION

The OPA4872 gives a new level of performance in wideband multiplexers. Figure 27 shows the dc-coupled, gain of +2V/V, dual power-supply circuit used as the basis of the ±5V Electrical Characteristics and Typical Characteristic curves. For test purposes, the input impedance is set to 75Ω with a resistor to ground and the output impedance is set to 75Ω with a series output resistor. Voltage swings reported in the specifications are taken directly at the input and output pins while load powers (in dBm) are defined at a matched 75Ω load. For the circuit of Figure 27, the total effective load will be 150Ω || 1046Ω = 131Ω. Logic pins A0 and A1 control which of the four inputs is selected while $\overline{EN}$ and SD allow for power reduction. One optional component is included in Figure 27. In addition to the usual power-supply decoupling capacitors to ground, a 0.01µF capacitor is included between the two power-supply pins. In practical printed circuit board (PCB) layouts, this optional added capacitor typically improves the 2nd-harmonic distortion performance by 3dB to 6dB for bipolar supply operation.

Even though the internal architecture of the OPA4872 includes current steering, it is advantageous to look at it as four switches looking into the noninverting input of a current feedback amplifier. Depending on the logic applied to channel control pins A0 and A1, one switch is on at all times. Figure 27 represents the OPA4872 in this configuration. The truth table for channel selection is shown in Table 2.

Table 2. TRUTH TABLE

A0	A1	$\overline{EN}$	SD	V_{OUT}
0	0	0	0	IN0
1	0	0	0	IN1
0	1	0	0	IN2
1	1	0	0	IN3
X	X	1	0	High-Z, I_Q = 3.4mA
X	X	X	1	High-Z, I_Q = 1.1mA

The OPA4872 is in disable mode, with a quiescent current of 3.4mA typical, when the $\overline{EN}$ pin is set to 0V. After being placed in disable mode, the OPA4872 is fully enabled in 6ns. For further power savings, the SD pin can be used. Setting the SD pin to 5V places the device in shutdown mode with a standing quiescent current of 1.1mA. Note that in this shutdown mode, the OPA4872 requires 15ns to be fully powered again. The truth table for disable and shutdown modes can be found in Table 2.

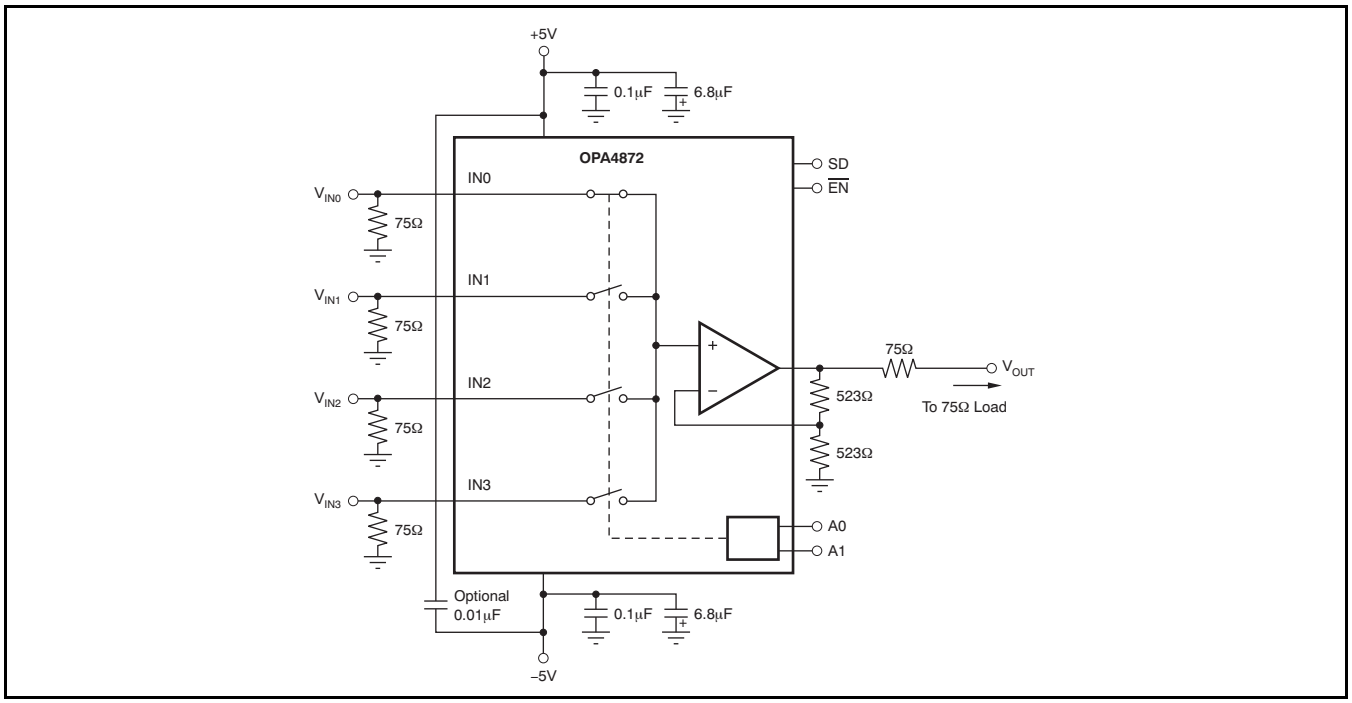

Figure 27. DC-Coupled, G = +2V/V Bipolar Specification and Test Circuit (Channel 0 Selected)

Copyright © 2007–2011, Texas Instruments Incorporated

2-BIT HIGH-SPEED PGA

The OPA4872 can be used as a 2-bit, high-speed programmable gain amplifier (PGA) when used in conjunction with another amplifier. Figure 28 shows one OPA695 used in series with each OPA4876 input and configured with gains of +1V/V, +2V/V, +4V/V, and +8V/V, respectively.

When channel 0 is selected, the overall gain to the matched load of the OPA4872 is 0dB. When channel 1 is selected, this circuit delivers 6dB of gain to the matched load. When channel 2 is selected, this circuit delivers 12dB of gain to the matched load. When channel 3 is selected, this circuit delivers 18dB of gain to the matched load.

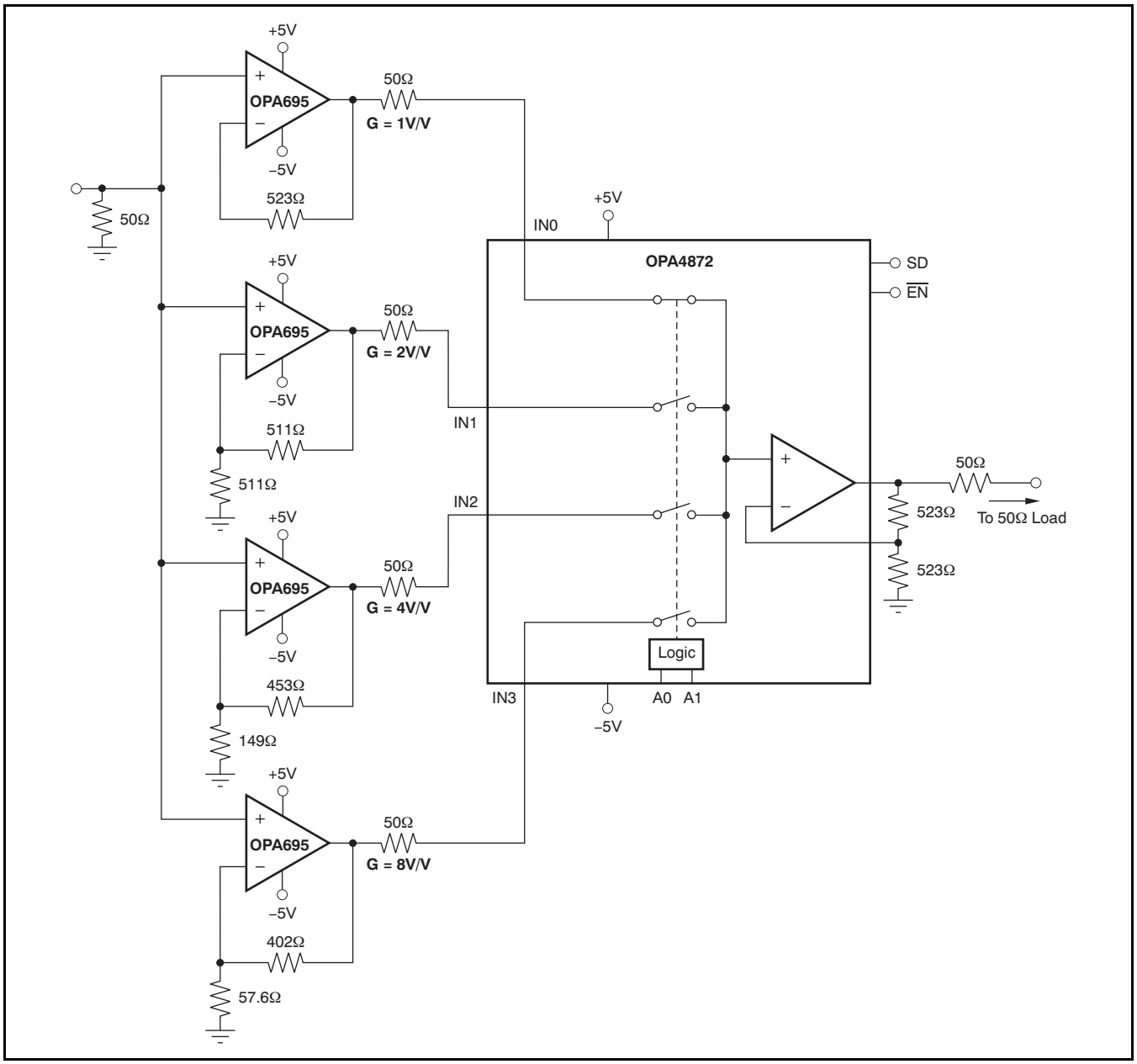

Figure 28. 2-Bit, High-Speed PGA, Greater Than 300MHz Channel Bandwidth

Copyright © 2007–2011, Texas Instruments Incorporated

2-BIT, HIGH-SPEED ATTENUATOR

In contrast to the PGA, a two-bit high-speed attenuator can be implemented by using an R-2R ladder together with the OPA4872. Figure 29 shows such an implementation.

Channel 0 sees the full input signal amplitude, where as channel 1 sees 1/2 V_{IN}, channel 2 see 1/4 V_{IN} and channel 3 sees 1/8 V_{IN}.

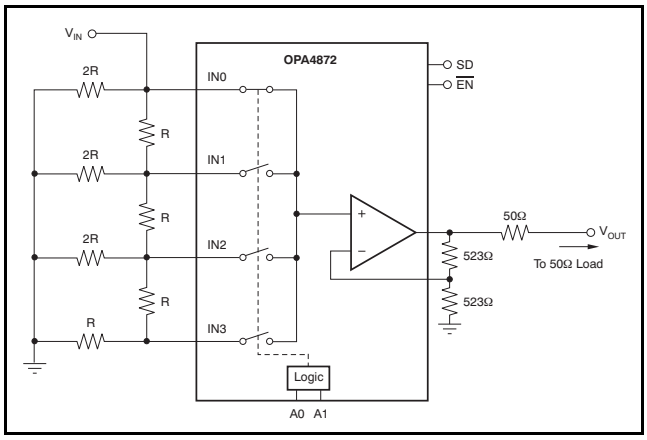

Figure 29. 2-Bit, High-Speed Attenuator, 500MHz Channel Bandwidth

4-INPUT RGB ROUTER

Three OPA4872s can be used together to form a four-input RGB router. The router for the red component is shown in Figure 30. Identical stages would be used for the green and blue channels.

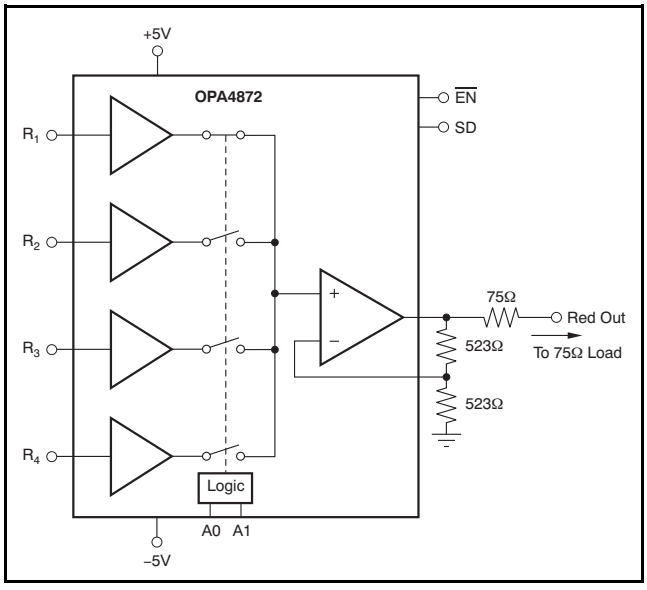

Figure 30. 4-Input RGB Router (Red Channel Shown)

8-TO-1 VIDEO MULTIPLEXER

Two OPA4872s can be used together to form an 8-input video multiplexer. The multiplexer is shown in Figure 31.

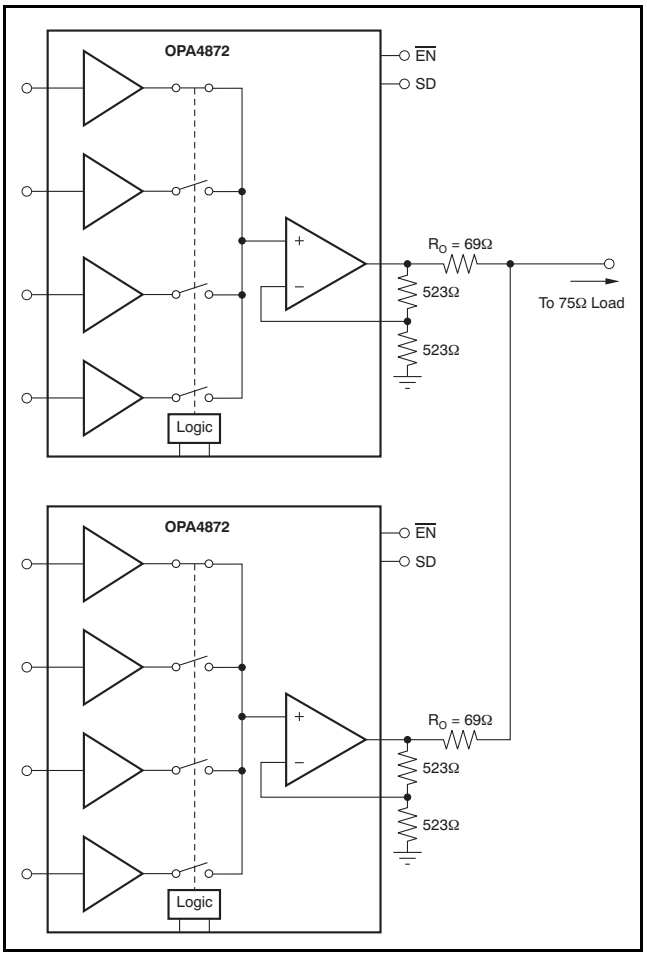

Figure 31. 8-to-1 Video Multiplexer

When connecting OPA4872 outputs together, maintain a gain of +1V/V at the load. The OPA4872 configuration shown is a gain of +6dB; thus, the matching resistance must be selected to achieve –6dB.

The set of equations to solve are shown in Equation 1 and Equation 2. Here, the impedance of interest is 75Ω.

$$\begin{cases} R_O = Z_O \parallel (R_O + R_F + R_G) \\ 1 + \dfrac{R_F}{R_G} = 2 \end{cases} \quad (1)$$

$$\begin{cases} R_F + R_G = 1046\Omega \\ R_F = R_G \end{cases} \quad (2)$$

Copyright © 2007–2011, Texas Instruments Incorporated

Solving for R_O, with *n* devices connected together, results in Equation 3:

$$R_O = \frac{75 \times (n - 1) + 804}{2} \times \left(\sqrt{1 + \frac{241200}{[75 \times (n - 1) + 804]^2}} - 1 \right) \quad (3)$$

Results for *n* varying from 2 to 6 are given in Table 3.

Table 3. Series Resistance versus Number of Parallel Outputs

NUMBER OF OPA4872s	R_O (Ω)
2	69
3	63.94
4	59.49
5	55.59
6	52.15

The two major limitations of this circuit are the device requirements for each OPA4872 and the acceptable return loss resulting from the mismatch between the load and the matching resistor.

DESIGN-IN TOOLS

DEMONSTRATION FIXTURE

A printed circuit board (PCB) is available to assist in the initial evaluation of circuit performance using the OPA4872. The fixture is offered free of charge as an unpopulated PCB, delivered with a user's guide. The summary information for this fixture is shown in Table 4.

Table 4. OPA4872 Demonstration Fixture

PRODUCT	PACKAGE	ORDERING NUMBER	LITERATURE NUMBER
OPA4872	SO-14	DEM-OPA-SO-1E	SBOU045

The demonstration fixture can be requested at the Texas Instruments web site at (www.ti.com) through the OPA4872 product folder.

MACROMODELS AND APPLICATIONS SUPPORT

Computer simulation of circuit performance using SPICE is often useful when analyzing the performance of analog circuits and systems. This practice is particularly true for video and RF amplifier circuits, where parasitic capacitance and inductance can have a major effect on circuit performance. A SPICE model for the OPA4872 is available through the Texas Instruments web site at www.ti.com. This model does a good job of predicting small-signal ac and transient performance under a wide variety of operating conditions. It does not do as well in predicting the harmonic distortion or dG/dP characteristics.

OPERATING SUGGESTIONS

SETTING RESISTOR VALUES TO OPTIMIZE BANDWIDTH

The output stage of the OPA4872 is a current-feedback op amp, meaning it can hold an almost constant bandwidth over signal gain settings with the proper adjustment of the external resistor values. This performance is shown in the Typical Characteristic curves; the small-signal bandwidth decreases only slightly with increasing gain. These curves also show that the feedback resistor has been changed for each gain setting. The resistor values on the feedback path can be treated as frequency response compensation elements while the ratio sets the signal gain of the feedback resistor divided by the gain resistor. Figure 32 shows the small-signal frequency response analysis circuit for a current feedback amplifier.

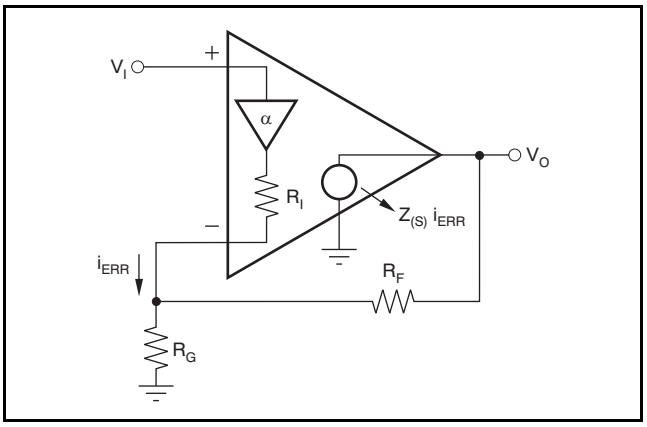

Figure 32. Recommended Feedback Resistor versus Noise Gain

The key elements of this current-feedback op amp model are:

α → Buffer gain from the noninverting input to the inverting input

R_I → Buffer output impedance

i_{ERR} → Feedback error current signal

$Z_{(s)}$ → Frequency-dependent open-loop transimpedance gain from i_{ERR} to V_O

The buffer gain is typically very close to 1.00 and is normally neglected from signal gain considerations. It will, however, set the CMRR for a single op amp differential amplifier configuration. For a buffer gain α < 1.0, the CMRR = –20 × log (1 – α) dB.

Copyright © 2007–2011, Texas Instruments Incorporated

R_I, the buffer output impedance, is a critical portion of the bandwidth control equation. R_I for the OPA4872 is typically about 30Ω. A current-feedback op amp senses an error current in the inverting node (as opposed to a differential input error voltage for a voltage-feedback op amp) and passes this on to the output through an internal frequency dependent transimpedance gain. The Typical Characteristics show this open-loop transimpedance response. This open-loop response is analogous to the open-loop voltage gain curve for a voltage-feedback op amp. Developing the transfer function for the circuit of Figure 32 gives Equation 4:

$$\frac{V_O}{V_I} = \frac{\alpha\left(1+\frac{R_F}{R_G}\right)}{1+\frac{R_F + R_I\left(1+\frac{R_F}{R_G}\right)}{Z_{(S)}}} = \frac{\alpha NG}{1+\frac{R_F + R_I\,NG}{Z_{(S)}}}$$

where:

$$NG = \left(1+\frac{R_F}{R_G}\right) \tag{4}$$

This formula is written in a loop-gain analysis format, where the errors arising from a noninfinite open-loop gain are shown in the denominator. If $Z_{(S)}$ were infinite over all frequencies, the denominator of Equation 4 would reduce to 1 and the ideal desired signal gain shown in the numerator would be achieved. The fraction in the denominator of Equation 4 determines the frequency response. Equation 5 shows this as the loop-gain equation:

$$\frac{Z_{(S)}}{R_F + R_I\,NG} = \text{Loop Gain} \tag{5}$$

If 20 × log(R_F + NG × R_I) were drawn on top of the open-loop transimpedance plot, the difference between the two calculations would be the loop gain at a given frequency. Eventually, $Z_{(S)}$ rolls off to equal the denominator of Equation 5, at which point the loop gain reduces to 1 (and the curves intersect). This point of equality is where the amplifier closed-loop frequency response given by Equation 4 starts to roll off, and is exactly analogous to the frequency at which the noise gain equals the open-loop voltage gain for a voltage-feedback op amp. The difference here is that the total impedance in the denominator of Equation 5 may be controlled somewhat separately from the desired signal gain (or NG).

The OPA4872 is internally compensated to give a maximally flat frequency response for R_F = 523Ω at NG = 2 on ±5V supplies. Evaluating the denominator of Equation 5 (which is the feedback transimpedance) gives an optimal target of 663Ω. As the signal gain changes, the contribution of the NG × R_I term in the feedback transimpedance will change, but the total can be held constant by adjusting R_F. Equation 6 gives an approximate equation for optimum R_F over signal gain:

$$R_F = 663\Omega - NG \times R_I \tag{6}$$

As the desired signal gain increases, this equation will eventually predict a negative R_F. A somewhat subjective limit to this adjustment can also be set by holding R_G to a minimum value of 20Ω. Lower values load both the buffer stage at the input and the output stage, if R_F gets too low, actually decreasing the bandwidth. Figure 33 shows the recommended R_F versus NG for ±5V operation. The values for R_F versus gain shown here are approximately equal to the values used to generate the Typical Characteristics. They differ in that the optimized values used in the Typical Characteristics are also correcting for board parasitics not considered in the simplified analysis leading to Equation 5. The values shown in Figure 33 give a good starting point for design where bandwidth optimization is desired.

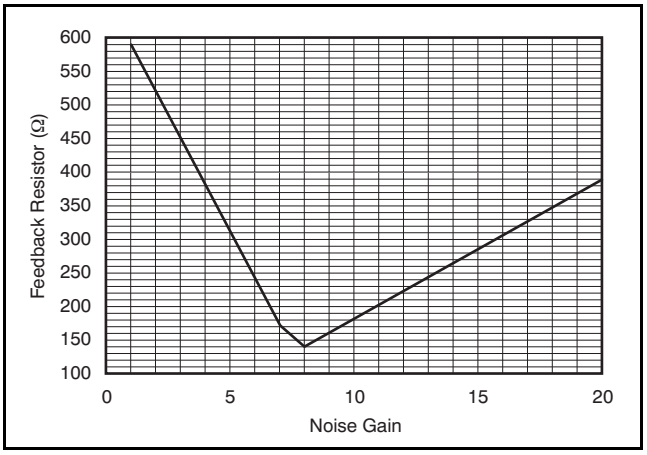

Figure 33. Feedback Resistor vs Noise Gain

The total impedance going into the inverting input may be used to adjust the closed-loop signal bandwidth. Inserting a series resistor between the inverting input and the summing junction increases the feedback impedance (denominator of Equation 4), decreasing the bandwidth.

Copyright © 2007–2011, Texas Instruments Incorporated

DRIVING CAPACITIVE LOADS

One of the most demanding, yet very common load conditions, is capacitive loading. Often, the capacitive load is the input of an analog-to-digital converter (ADC)—including additional external capacitance that may be recommended to improve ADC linearity. A high-speed device such as the OPA4872 can be very susceptible to decreased stability and closed-loop response peaking when a capacitive load is placed directly on the output pin. When the device open-loop output resistance is considered, this capacitive load introduces an additional pole in the signal path that can decrease the phase margin. Several external solutions to this problem have been suggested. When the primary considerations are frequency response flatness, pulse response fidelity, and/or distortion, the simplest and most effective solution is to isolate the capacitive load from the feedback loop by inserting a series isolation resistor between the amplifier output and the capacitive load. This isolation resistor does not eliminate the pole from the loop response, but rather shifts it and adds a zero at a higher frequency. The additional zero acts to cancel the phase lag from the capacitive load pole, thus increasing the phase margin and improving stability.

The Typical Characteristics show the recommended R_S versus capacitive load and the resulting frequency response at the load; see Figure 5. Parasitic capacitive loads greater than 2pF can begin to degrade the performance of the OPA4872. Long PCB traces, unmatched cables, and connections to multiple devices can easily cause this value to be exceeded. Always consider this effect carefully, and add the recommended series resistor as close as possible to the OPA4872 output pin (see the *Board Layout Guidelines* section).

DC ACCURACY

The OPA4872 offers excellent dc signal accuracy. Parameters that influence the output dc offset voltage are:

- Output offset voltage
- Input bias current
- Gain error
- Power-supply rejection ratio
- Temperature

Leaving both temperature and gain error parameters aside, the output offset voltage envelope can be described as shown in Equation 7:

$$V_{OSO_envelope} = V_{OS} \times G \pm I_{bi} \times R_F \pm (R_S \times I_b) \times G \pm \left|5 - (V_{S+})\right| \times 10^{-\frac{PSRR+}{20}} \pm \left|-5 - (V_{S-})\right| \times 10^{-\frac{PSRR-}{20}} \quad (7)$$

Where:

R_S: Input resistance seen by R0, R1, G0, G1, B0, or B1.

I_b: Noninverting input bias current

I_{bi}: Inverting input bias current

G: Gain

V_{S+}: Positive supply voltage

V_{S-}: Negative supply voltage

PSRR+: Positive supply PSRR

PSRR–: Negative supply PSRR

V_{OS} : Input Offset Voltage

Evaluating the front-page schematic, using a worst-case, +25°C offset voltage, bias current and PSRR specifications and operating at ±6V, gives a worst-case output equal to Equation 8:

$$\pm 10mV + 75\Omega \times \pm 14\mu A \times 2 + 523\Omega \times \pm 18\mu A \pm \left|5 - 6\right| \times 10^{-\frac{50}{20}} \pm \left|-5 - (-6)\right| \times 10^{-\frac{51}{20}} = \pm 29.2mV \quad (8)$$

DISTORTION PERFORMANCE

The OPA4872 provides good distortion performance into a 150Ω load on ±5V supplies. Relative to alternative solutions, it provides exceptional performance into lighter loads. Generally, until the fundamental signal reaches very high frequency or power levels, the 2nd harmonic dominates the distortion with a negligible 3rd harmonic component. Focusing then on the 2nd harmonic, increasing the load impedance directly improves distortion. Also, providing an additional supply decoupling capacitor (0.01µF) between the supply pins (for bipolar operation) improves the 2nd-order distortion slightly (3dB to 6dB).

In most op amps, increasing the output voltage swing increases harmonic distortion directly. The Typical Characteristics show the 2nd harmonic increasing at a little less than the expected 2X rate while the 3rd harmonic increases at a little less than the expected 3X rate. Where the test power doubles, the 2nd harmonic increases only by less than the expected 6dB, whereas the 3rd harmonic increases by less than the expected 12dB.

Copyright © 2007–2011, Texas Instruments Incorporated

NOISE PERFORMANCE

The OPA4872 offers an excellent balance between voltage and current noise terms to achieve low output noise. The inverting current noise (19pA/√Hz) is significantly lower than earlier solutions, while the input voltage noise (4.5nV/√Hz) is lower than most unity-gain stable, wideband, voltage-feedback op amps. As long as the ac source impedance looking out of the noninverting node is less than 100Ω, this current noise will not contribute significantly to the total output noise. The op amp input voltage noise and the two input current noise terms combine to give low output noise under a wide variety of operating conditions. Figure 34 shows the OPA4872 noise analysis model with all the noise terms included. In this model, all noise terms are taken to be noise voltage or current density terms in either nV/√Hz or pA/√Hz.

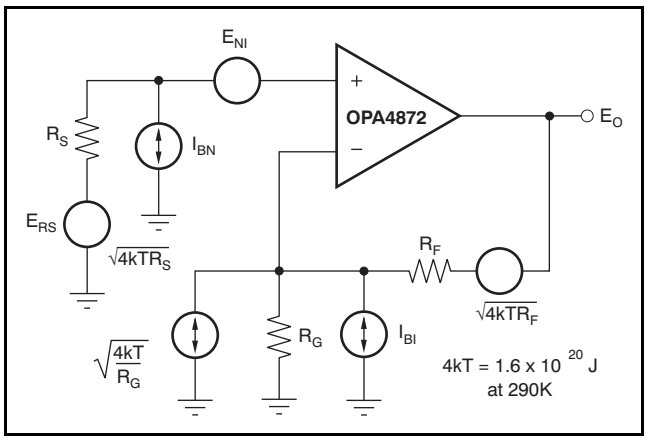

Figure 34. Op Amp Noise Analysis Model

The total output spot noise voltage can be computed as the square root of the sum of all squared output noise voltage contributors. Equation 9 shows the general form for the output noise voltage using the terms shown in Figure 35.

$$E_O = \sqrt{\left(E_{NI}^2 + (I_{BN}R_S)^2 + 4kTR_S\right)NG^2 + (I_{BI}R_F)^2 + 4kTR_FNG} \quad (9)$$

Dividing this expression by the noise gain (NG = (1 + R_F/R_G)) gives the equivalent input-referred spot noise voltage at the noninverting input, as shown in Equation 10.

$$E_O = \sqrt{E_{NI}^2 + (I_{BN}R_S)^2 + 4kTR_S + \left(\frac{I_{BI}R_F}{NG}\right)^2 + \frac{4kTR_F}{NG}} \quad (10)$$

Evaluating these two equations for the OPA4872 circuit and component values (see Figure 27) gives a total output spot noise voltage of 14.2nV/√Hz and a total equivalent input spot noise voltage of 7.1nV/√Hz. This total input-referred spot noise voltage is higher than the 4.5nV/√Hz specification for the OPA4872 voltage noise alone. This voltage reflects the noise added to the output by the inverting current noise times the feedback resistor. If the feedback resistor is reduced in high-gain configurations, the total input-referred voltage noise given by Equation 10 approaches only the 4.5nV/√Hz of the op amp itself. For example, going to a gain of +10 using R_F = 178Ω gives a total input-referred noise of 4.7nV/√Hz.

Copyright © 2007–2011, Texas Instruments Incorporated

THERMAL ANALYSIS

Heatsinking or forced airflow may be required under extreme operating conditions. Maximum desired junction temperature sets the maximum allowed internal power dissipation as discussed in this document. In no case should the maximum junction temperature be allowed to exceed +150°C.

Operating junction temperature (T_J) is given by $T_A + P_D \times \theta_{JA}$. The total internal power dissipation (P_D) is the sum of quiescent power (P_{DQ}) and additional power dissipated in the output stage (P_{DL}) to deliver load power. Quiescent power is simply the specified no-load supply current times the total supply voltage across the part. P_{DL} depends on the required output signal and load; for a grounded resistive load, P_{DL} is at a maximum when the output is fixed at a voltage equal to 1/2 of either supply voltage (for equal bipolar supplies). Under this condition $P_{DL} = V_S{}^2/(4 \times R_L)$, where R_L includes feedback network loading.

Note that it is the power in the output stage and not in the load that determines internal power dissipation.

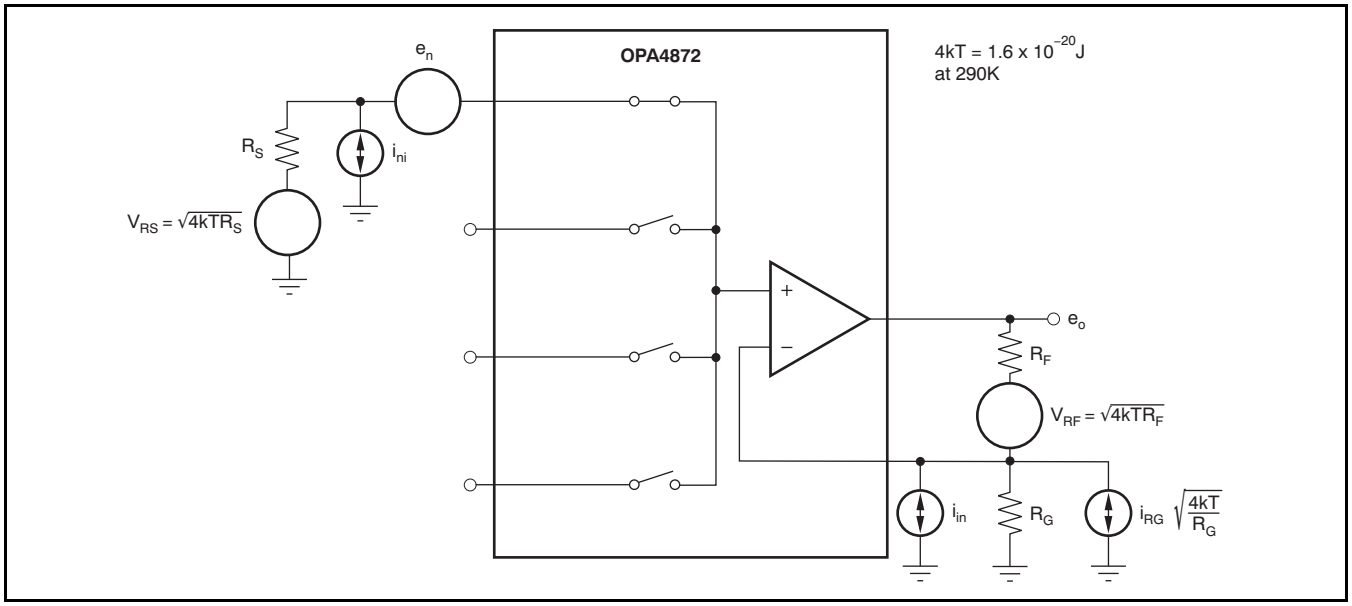

Figure 35. OPA4872 Noise Analysis Model

As a worst-case example, compute the maximum T_J using an OPA4872ID in the circuit of Figure 27 operating at the maximum specified ambient temperature of +85°C with its output driving a grounded 100Ω load to +2.5V:

$$P_D = 10V \times 11.7mA + \left(5^2/[4 \times (150\Omega \parallel 1046\Omega)]\right) = 165mW$$

$$\text{Maximum } T_J = +85°C + (165mW \times 80°C/W) = 98°C$$

This worst-case condition does not exceed the maximum junction temperature. Normally, this extreme case is not encountered.

BOARD LAYOUT GUIDELINES

Achieving optimum performance with a high-frequency amplifier such as the OPA4872 requires careful attention to board layout parasitics and external component types. Recommendations to optimize performance include:

a) Minimize parasitic capacitance to any ac ground for all of the signal I/O pins. Parasitic capacitance on the output pin can cause instability; on the noninverting input, it can react with the source impedance to cause unintentional bandlimiting. To reduce unwanted capacitance, a window around the signal I/O pins should be opened in all of the ground and power planes around those pins. Otherwise, ground and power planes should be unbroken elsewhere on the board.

b) Minimize the distance (< 0.25") from the power-supply pins to high frequency 0.1µF decoupling capacitors. At the device pins, the ground and power plane layout should not be in close proximity to the signal I/O pins. Avoid narrow power and ground traces to minimize inductance between the pins and the decoupling capacitors. The power-supply connections (on pins 9, 11, 13, and 15) should always be decoupled with these capacitors. An optional supply decoupling capacitor across the two power supplies (for bipolar operation) improves 2nd harmonic distortion performance. Larger (2.2µF to 6.8µF) decoupling capacitors, effective at lower frequency, should also be used on the main supply pins. These capacitors may be placed somewhat farther from the device and may be shared among several devices in the same area of the PCB.

c) Careful selection and placement of external components will preserve the high-frequency performance of the OPA4872. Resistors should be a very low reactance type. Surface-mount resistors work best and allow a tighter overall layout. Metal-film and carbon composition, axially-leaded resistors can also provide good high-frequency performance. Again, keep their leads and PCB trace length as short as possible. Never use wirewound type resistors in a high-frequency application. Other network components, such as noninverting input termination resistors, should also be placed close to the package.

d) Connections to other wideband devices on the board may be made with short direct traces or through onboard transmission lines. For short connections, consider the trace and the input to the next device as a lumped capacitive load. Relatively wide traces (50mils to 100mils) should be used, preferably with ground and power planes opened up around them.

Estimate the total capacitive load and set R_S from the plot of Figure 5. Low parasitic capacitive loads (greater than 5pF) may not need an R_S because the OPA4872 is nominally compensated to operate with a 2pF parasitic load. If a long trace is required, and the 6dB signal loss intrinsic to a doubly-terminated transmission line is acceptable, implement a matched impedance transmission line using microstrip or stripline techniques (consult an ECL design handbook for microstrip and stripline layout techniques). A 50Ω environment is normally not necessary on the board, and in fact, a higher impedance environment improves distortion as shown in the Distortion versus Load plot; see Figure 7. With a characteristic board trace impedance defined based on board material and trace dimensions, a matching series resistor into the trace from the output of the OPA4872 is used as well as a terminating shunt resistor at the input of the destination device. Remember also that the terminating impedance will be the parallel combination of the shunt resistor and the input impedance of the destination device; this total effective impedance should be set to match the trace impedance. The high output voltage and current capability of the OPA4872 allows multiple destination devices to be handled as separate transmission lines, each with its own series and shunt terminations. If the 6dB attenuation of a doubly-terminated transmission line is unacceptable, a long trace can be series-terminated at the source end only. Treat the trace as a capacitive load in this case and set the series resistor value as shown in Figure 5. This configuration does not preserve signal integrity as well as a doubly-terminated line. If the input impedance of the destination device is low, there will be some signal attenuation because of the voltage divider formed by the series output into the terminating impedance.

Copyright © 2007–2011, Texas Instruments Incorporated

e) Socketing a high-speed part like the OPA4872 is not recommended. The additional lead length and pin-to-pin capacitance introduced by the socket can create an extremely troublesome parasitic network that can make it almost impossible to achieve a smooth, stable frequency response. Best results are obtained by soldering the OPA4872 onto the board.

INPUT AND ESD PROTECTION

The OPA4872 is built using a very high-speed complementary bipolar process. The internal junction breakdown voltages are relatively low for these very small geometry devices. These breakdowns are reflected in the Absolute Maximum Ratings table. All device pins have limited ESD protection using internal diodes to the power supplies as shown in Figure 36.

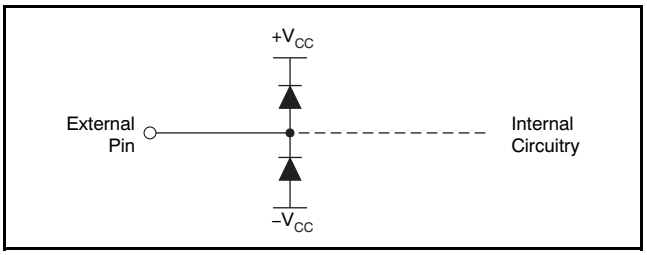

Figure 36. Internal ESD Protection

These diodes provide moderate protection to input overdrive voltages above the supplies as well. The protection diodes can typically support 30mA continuous current. Where higher currents are possible (for example, in systems with ±15V supply parts driving into the OPA4872), current-limiting series resistors should be added into the two inputs. Keep these resistor values as low as possible because high values degrade both noise performance and frequency response.

Copyright © 2007–2011, Texas Instruments Incorporated

REVISION HISTORY

NOTE: Page numbers for previous revisions may differ from page numbers in the current version.

Changes from Revision B (August 2008) to Revision C **Page**

- Changed the HBM ESD rating specification in Absolute Maximum Ratings table 2

Changes from Revision A (September 2007) to Revision B **Page**

- Changed storage temperature range rating in *Absolute Maximum Ratings* table from –40°C to +125°C to –65°C to +125°C 2
- Changed 0V to 5V in third paragraph of *Wideband Multiplexer Operation* section 10

Copyright © 2007–2011, Texas Instruments Incorporated

PACKAGING INFORMATION

Orderable Device	Status (1)	Package Type	Package Drawing	Pins	Package Qty	Eco Plan (2)	Lead/Ball Finish (6)	MSL Peak Temp (3)	Op Temp (°C)	Device Marking (4/5)	Samples
OPA4872ID	ACTIVE	SOIC	D	14	50	Green (RoHS & no Sb/Br)	CU NIPDAU	Level-2-260C-1 YEAR		OPA4872	Samples
OPA4872IDG4	ACTIVE	SOIC	D	14	50	Green (RoHS & no Sb/Br)	CU NIPDAU	Level-2-260C-1 YEAR		OPA4872	Samples
OPA4872IDR	ACTIVE	SOIC	D	14	2500	Green (RoHS & no Sb/Br)	CU NIPDAU	Level-2-260C-1 YEAR		OPA4872	Samples

(1) The marketing status values are defined as follows:
ACTIVE: Product device recommended for new designs.
LIFEBUY: TI has announced that the device will be discontinued, and a lifetime-buy period is in effect.
NRND: Not recommended for new designs. Device is in production to support existing customers, but TI does not recommend using this part in a new design.
PREVIEW: Device has been announced but is not in production. Samples may or may not be available.
OBSOLETE: TI has discontinued the production of the device.

(2) Eco Plan - The planned eco-friendly classification: Pb-Free (RoHS), Pb-Free (RoHS Exempt), or Green (RoHS & no Sb/Br) - please check http://www.ti.com/productcontent for the latest availability information and additional product content details.
TBD: The Pb-Free/Green conversion plan has not been defined.
Pb-Free (RoHS): TI's terms "Lead-Free" or "Pb-Free" mean semiconductor products that are compatible with the current RoHS requirements for all 6 substances, including the requirement that lead not exceed 0.1% by weight in homogeneous materials. Where designed to be soldered at high temperatures, TI Pb-Free products are suitable for use in specified lead-free processes.
Pb-Free (RoHS Exempt): This component has a RoHS exemption for either 1) lead-based flip-chip solder bumps used between the die and package, or 2) lead-based die adhesive used between the die and leadframe. The component is otherwise considered Pb-Free (RoHS compatible) as defined above.
Green (RoHS & no Sb/Br): TI defines "Green" to mean Pb-Free (RoHS compatible), and free of Bromine (Br) and Antimony (Sb) based flame retardants (Br or Sb do not exceed 0.1% by weight in homogeneous material)

(3) MSL, Peak Temp. - The Moisture Sensitivity Level rating according to the JEDEC industry standard classifications, and peak solder temperature.

(4) There may be additional marking, which relates to the logo, the lot trace code information, or the environmental category on the device.

(5) Multiple Device Markings will be inside parentheses. Only one Device Marking contained in parentheses and separated by a "~" will appear on a device. If a line is indented then it is a continuation of the previous line and the two combined represent the entire Device Marking for that device.

(6) Lead/Ball Finish - Orderable Devices may have multiple material finish options. Finish options are separated by a vertical ruled line. Lead/Ball Finish values may wrap to two lines if the finish value exceeds the maximum column width.

Important Information and Disclaimer: The information provided on this page represents TI's knowledge and belief as of the date that it is provided. TI bases its knowledge and belief on information provided by third parties, and makes no representation or warranty as to the accuracy of such information. Efforts are underway to better integrate information from third parties. TI has taken and

continues to take reasonable steps to provide representative and accurate information but may not have conducted destructive testing or chemical analysis on incoming materials and chemicals. TI and TI suppliers consider certain information to be proprietary, and thus CAS numbers and other limited information may not be available for release.

In no event shall TI's liability arising out of such information exceed the total purchase price of the TI part(s) at issue in this document sold by TI to Customer on an annual basis.

OTHER QUALIFIED VERSIONS OF OPA4872 :

- Enhanced Product: OPA4872-EP

NOTE: Qualified Version Definitions:

- Enhanced Product - Supports Defense, Aerospace and Medical Applications

TAPE AND REEL INFORMATION

REEL DIMENSIONS

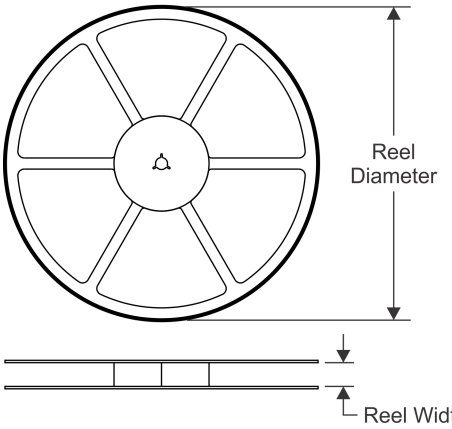

TAPE DIMENSIONS

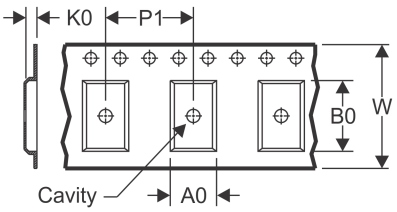

A0	Dimension designed to accommodate the component width
B0	Dimension designed to accommodate the component length
K0	Dimension designed to accommodate the component thickness
W	Overall width of the carrier tape
P1	Pitch between successive cavity centers

QUADRANT ASSIGNMENTS FOR PIN 1 ORIENTATION IN TAPE

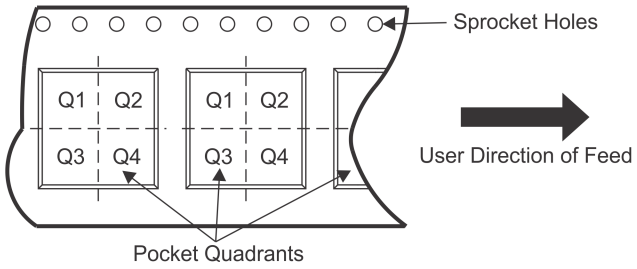

*All dimensions are nominal

Device	Package Type	Package Drawing	Pins	SPQ	Reel Diameter (mm)	Reel Width W1 (mm)	A0 (mm)	B0 (mm)	K0 (mm)	P1 (mm)	W (mm)	Pin1 Quadrant
OPA4872IDR	SOIC	D	14	2500	330.0	16.4	6.5	9.0	2.1	8.0	16.0	Q1

TAPE AND REEL BOX DIMENSIONS

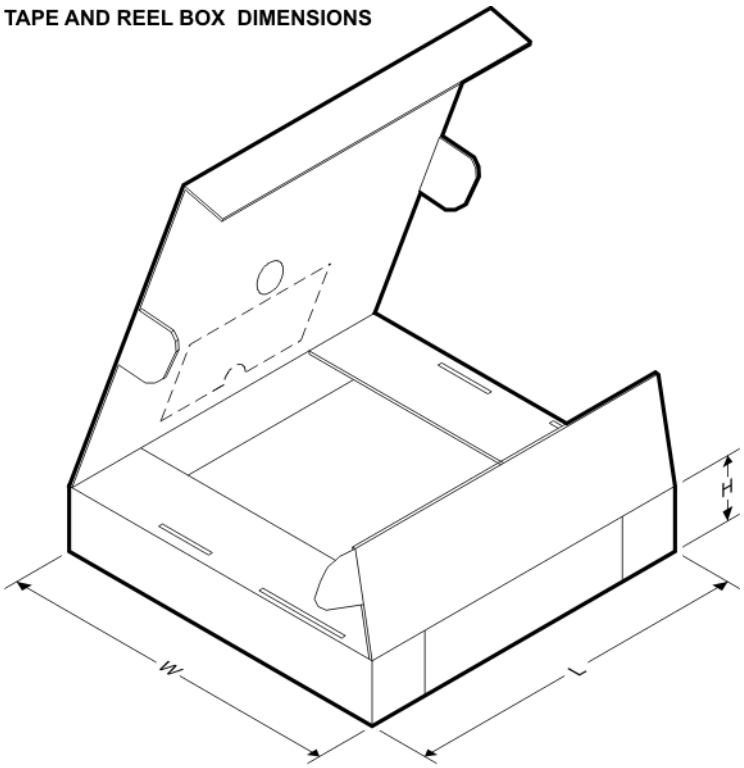

*All dimensions are nominal

Device	Package Type	Package Drawing	Pins	SPQ	Length (mm)	Width (mm)	Height (mm)
OPA4872IDR	SOIC	D	14	2500	367.0	367.0	38.0

D (R–PDSO–G14) PLASTIC SMALL OUTLINE

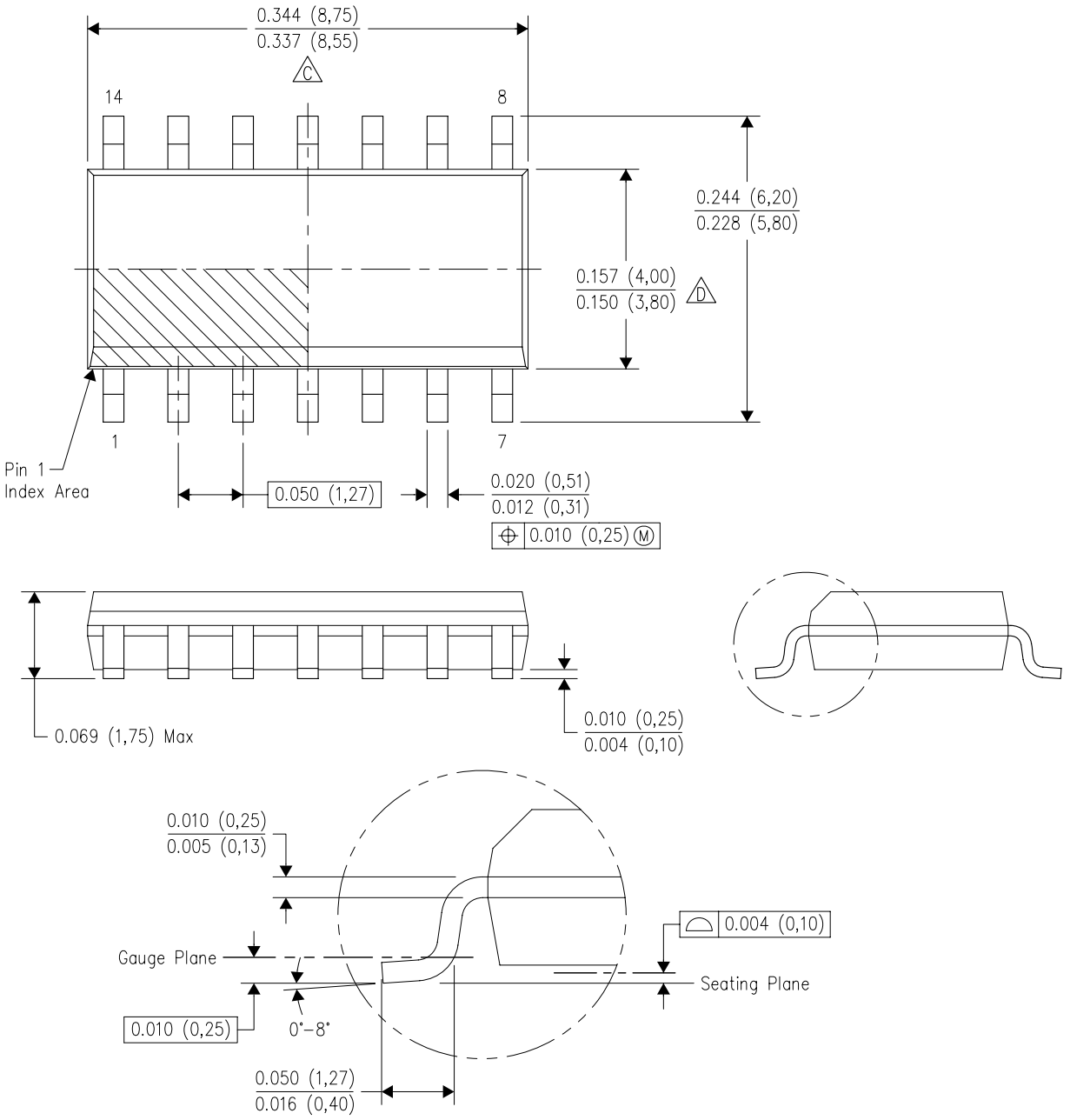

4040047–5/M 06/11

NOTES:
A. All linear dimensions are in inches (millimeters).
B. This drawing is subject to change without notice.
C. Body length does not include mold flash, protrusions, or gate burrs. Mold flash, protrusions, or gate burrs shall not exceed 0.006 (0,15) each side.
D. Body width does not include interlead flash. Interlead flash shall not exceed 0.017 (0,43) each side.
E. Reference JEDEC MS–012 variation AB.

D (R–PDSO–G14) PLASTIC SMALL OUTLINE

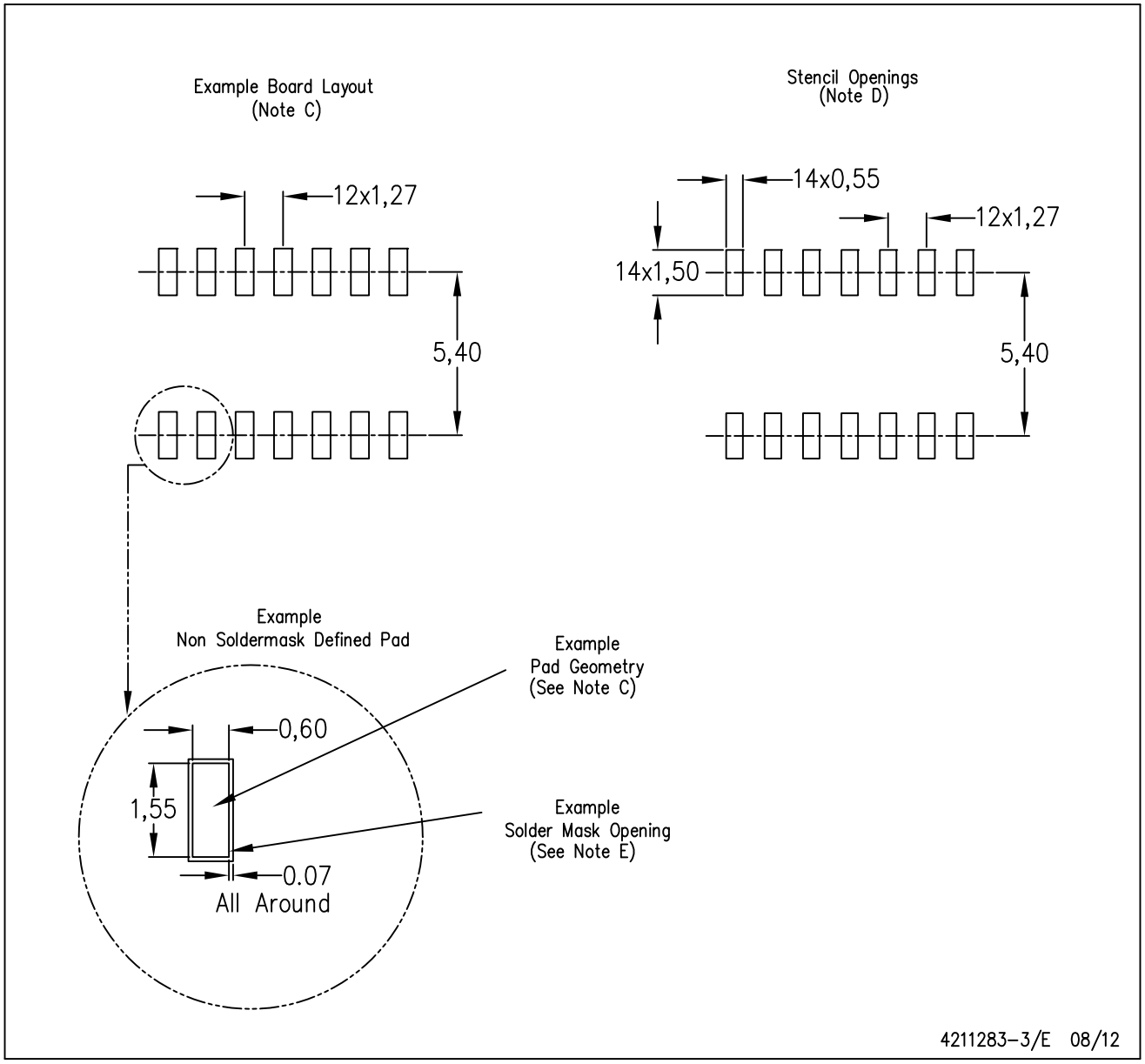

NOTES:
A. All linear dimensions are in millimeters.
B. This drawing is subject to change without notice.
C. Publication IPC–7351 is recommended for alternate designs.
D. Laser cutting apertures with trapezoidal walls and also rounding corners will offer better paste release. Customers should contact their board assembly site for stencil design recommendations. Refer to IPC–7525 for other stencil recommendations.
E. Customers should contact their board fabrication site for solder mask tolerances between and around signal pads.

IMPORTANT NOTICE

Texas Instruments Incorporated and its subsidiaries (TI) reserve the right to make corrections, enhancements, improvements and other changes to its semiconductor products and services per JESD46, latest issue, and to discontinue any product or service per JESD48, latest issue. Buyers should obtain the latest relevant information before placing orders and should verify that such information is current and complete. All semiconductor products (also referred to herein as “components”) are sold subject to TI’s terms and conditions of sale supplied at the time of order acknowledgment.

TI warrants performance of its components to the specifications applicable at the time of sale, in accordance with the warranty in TI’s terms and conditions of sale of semiconductor products. Testing and other quality control techniques are used to the extent TI deems necessary to support this warranty. Except where mandated by applicable law, testing of all parameters of each component is not necessarily performed.

TI assumes no liability for applications assistance or the design of Buyers’ products. Buyers are responsible for their products and applications using TI components. To minimize the risks associated with Buyers’ products and applications, Buyers should provide adequate design and operating safeguards.

TI does not warrant or represent that any license, either express or implied, is granted under any patent right, copyright, mask work right, or other intellectual property right relating to any combination, machine, or process in which TI components or services are used. Information published by TI regarding third-party products or services does not constitute a license to use such products or services or a warranty or endorsement thereof. Use of such information may require a license from a third party under the patents or other intellectual property of the third party, or a license from TI under the patents or other intellectual property of TI.

Reproduction of significant portions of TI information in TI data books or data sheets is permissible only if reproduction is without alteration and is accompanied by all associated warranties, conditions, limitations, and notices. TI is not responsible or liable for such altered documentation. Information of third parties may be subject to additional restrictions.

Resale of TI components or services with statements different from or beyond the parameters stated by TI for that component or service voids all express and any implied warranties for the associated TI component or service and is an unfair and deceptive business practice. TI is not responsible or liable for any such statements.

Buyer acknowledges and agrees that it is solely responsible for compliance with all legal, regulatory and safety-related requirements concerning its products, and any use of TI components in its applications, notwithstanding any applications-related information or support that may be provided by TI. Buyer represents and agrees that it has all the necessary expertise to create and implement safeguards which anticipate dangerous consequences of failures, monitor failures and their consequences, lessen the likelihood of failures that might cause harm and take appropriate remedial actions. Buyer will fully indemnify TI and its representatives against any damages arising out of the use of any TI components in safety-critical applications.

In some cases, TI components may be promoted specifically to facilitate safety-related applications. With such components, TI’s goal is to help enable customers to design and create their own end-product solutions that meet applicable functional safety standards and requirements. Nonetheless, such components are subject to these terms.

No TI components are authorized for use in FDA Class III (or similar life-critical medical equipment) unless authorized officers of the parties have executed a special agreement specifically governing such use.

Only those TI components which TI has specifically designated as military grade or “enhanced plastic” are designed and intended for use in military/aerospace applications or environments. Buyer acknowledges and agrees that any military or aerospace use of TI components which have ***not*** been so designated is solely at the Buyer's risk, and that Buyer is solely responsible for compliance with all legal and regulatory requirements in connection with such use.

TI has specifically designated certain components as meeting ISO/TS16949 requirements, mainly for automotive use. In any case of use of non-designated products, TI will not be responsible for any failure to meet ISO/TS16949.

Products		**Applications**	
Audio	www.ti.com/audio	Automotive and Transportation	www.ti.com/automotive
Amplifiers	amplifier.ti.com	Communications and Telecom	www.ti.com/communications
Data Converters	dataconverter.ti.com	Computers and Peripherals	www.ti.com/computers
DLP® Products	www.dlp.com	Consumer Electronics	www.ti.com/consumer-apps
DSP	dsp.ti.com	Energy and Lighting	www.ti.com/energy
Clocks and Timers	www.ti.com/clocks	Industrial	www.ti.com/industrial
Interface	interface.ti.com	Medical	www.ti.com/medical
Logic	logic.ti.com	Security	www.ti.com/security
Power Mgmt	power.ti.com	Space, Avionics and Defense	www.ti.com/space-avionics-defense
Microcontrollers	microcontroller.ti.com	Video and Imaging	www.ti.com/video
RFID	www.ti-rfid.com		
OMAP Applications Processors	www.ti.com/omap	**TI E2E Community**	e2e.ti.com
Wireless Connectivity	www.ti.com/wirelessconnectivity		

Mailing Address: Texas Instruments, Post Office Box 655303, Dallas, Texas 75265
Copyright © 2014, Texas Instruments Incorporated