OPA355
OPA2355
OPA3355

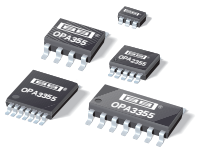

SBOS195D – MARCH 2001 – REVISED JANUARY 2004

200MHz, CMOS OPERATIONAL AMPLIFIER WITH SHUTDOWN

FEATURES

- UNITY-GAIN BANDWIDTH: 450MHz
- WIDE BANDWIDTH: 200MHz GBW
- HIGH SLEW RATE: 360V/μs
- LOW NOISE: 5.8nV/√Hz
- EXCELLENT VIDEO PERFORMANCE:
  DIFF GAIN: 0.02%, DIFF PHASE: 0.05°
  0.1dB GAIN FLATNESS: 75MHz
- INPUT RANGE INCLUDES GROUND
- RAIL-TO-RAIL OUTPUT (within 100mV)
- LOW INPUT BIAS CURRENT: 3pA
- LOW SHUTDOWN CURRENT: 3.4μA
- ENABLE/DISABLE TIME: 100ns/30ns
- THERMAL SHUTDOWN
- SINGLE-SUPPLY OPERATING RANGE: 2.5V to 5.5V
- *Micro*SIZE PACKAGES

APPLICATIONS

- VIDEO PROCESSING
- ULTRASOUND
- OPTICAL NETWORKING, TUNABLE LASERS
- PHOTODIODE TRANSIMPEDANCE AMPS
- ACTIVE FILTERS
- HIGH-SPEED INTEGRATORS
- ANALOG-TO-DIGITAL (A/D) CONVERTER INPUT BUFFERS
- DIGITAL-TO-ANALOG (D/A) CONVERTER OUTPUT AMPLIFIERS
- BARCODE SCANNERS
- COMMUNICATIONS

DESCRIPTION

The OPA355 series high-speed, voltage-feedback CMOS operational amplifiers are designed for video and other applications requiring wide bandwidth. The OPA355 is unity-gain stable and can drive large output currents. In addition, the OPA355 has a digital shutdown (Enable) function. This feature provides power savings during idle periods and places the output in a high-impedance state to support output multiplexing. Differential gain is 0.02% and differential phase is 0.05°. Quiescent current is only 8.3mA per channel.

The OPA355 is optimized for operation on single or dual supplies as low as 2.5V (±1.25V) and up to 5.5V (±2.75V). Common-mode input range for the OPA355 extends 100mV below ground and up to 1.5V from V+. The output swing is within 100mV of the rails, supporting wide dynamic range.

The OPA355 series is available in single (SOT23-6 and SO-8), dual (MSOP-10), and triple (TSSOP-14 and SO-14) versions. Multichannel versions feature completely independent circuitry for lowest crosstalk and freedom from interaction. All are specified over the extended –40°C to +125°C range.

OPA355 RELATED PRODUCTS

FEATURES	PRODUCT
200MHz, Rail-to-Rail Output, CMOS, No Shutdown	OPA356
38MHz, Rail-to-Rail Input/Output, CMOS	OPAx350
75MHz, Rail-to-Rail Output	OPAx631
150MHz, Rail-to-Rail Output	OPAx634
Differential Input/Output, 3.3V Supply	THS412x

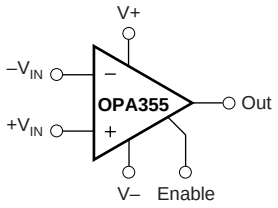

Please be aware that an important notice concerning availability, standard warranty, and use in critical applications of Texas Instruments semiconductor products and disclaimers thereto appears at the end of this data sheet.

All trademarks are the property of their respective owners.

PRODUCTION DATA information is current as of publication date. Products conform to specifications per the terms of Texas Instruments standard warranty. Production processing does not necessarily include testing of all parameters.

Copyright © 2001-2004, Texas Instruments Incorporated

ABSOLUTE MAXIMUM RATINGS[1]

Supply Voltage, V+ to V–	7.5V
Signal Input Terminals, Voltage[2]	(V–) – 0.5V to (V+) + 0.5V
Current[2]	10mA
Enable Input	(V–) – 0.5V to (V+) + 0.5V
Output Short-Circuit[3]	Continuous
Operating Temperature	–55°C to +150°C
Storage Temperature	–65°C to +150°C
Junction Temperature	+160°C
Lead Temperature (soldering, 10s)	+300°C

NOTES: (1) Stresses above these ratings may cause permanent damage. Exposure to absolute maximum conditions for extended periods may degrade device reliability. These are stress ratings only, and functional operation of the device at these or any other conditions beyond those specified is not implied. (2) Input terminals are diode-clamped to the power-supply rails. Input signals that can swing more than 0.5V beyond the supply rails should be current limited to 10mA or less. (3) Short-circuit to ground, one amplifier per package.

PACKAGE/ORDERING INFORMATION[1]

PRODUCT	PACKAGE-LEAD	PACKAGE MARKING
OPA355	SOT23-6	C55
"	"	"
OPA355	SO-8	OPA355UA
"	"	"
OPA2355	MSOP-10	D55
"	"	"
OPA3355	TSSOP-14	OPA3355EA
"	"	"
OPA3355	SO-14	OPA3355UA
"	"	"

NOTE: (1) For the most current package and ordering information, see the Package Option Addendum located at the end of this data sheet.

ELECTROSTATIC DISCHARGE SENSITIVITY

This integrated circuit can be damaged by ESD. Texas Instruments recommends that all integrated circuits be handled with appropriate precautions. Failure to observe proper handling and installation procedures can cause damage.

ESD damage can range from subtle performance degradation to complete device failure. Precision integrated circuits may be more susceptible to damage because very small parametric changes could cause the device not to meet its published specifications.

PIN CONFIGURATIONS

Top View

OPA355

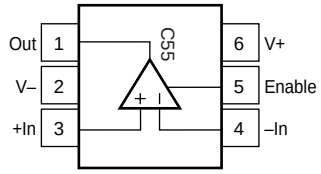

SOT23-6[1]

OPA355

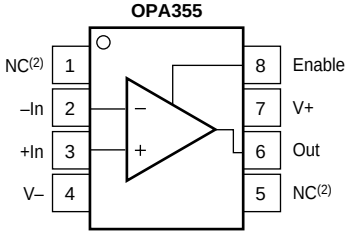

SO-8

NOTES: (1) Pin 1 of the SOT23-6 is determined by orienting the package marking as indicated in the diagram. (2) NC indicates no internal connection.

OPA2355

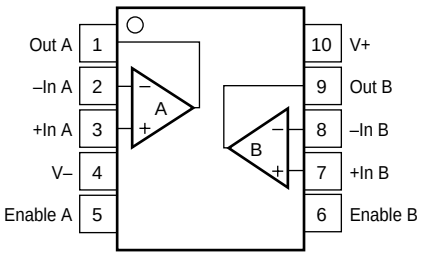

MSOP-10

OPA3355

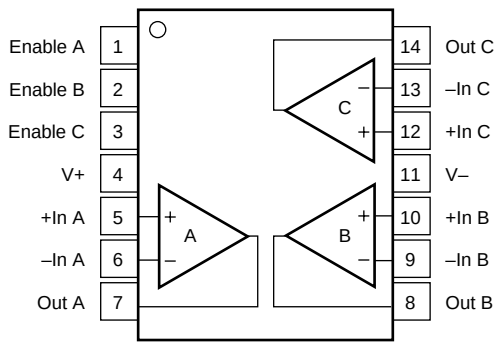

SO-14
TSSOP-14

ELECTRICAL CHARACTERISTICS: V_S = +2.7V to +5.5V Single-Supply

Boldface limits apply over the specified temperature range, T_A = –40°C to +125°C.

At T_A = +25°C, R_F = 604Ω, R_L = 150Ω, and connected to V_S/2, unless otherwise noted.

PARAMETER		CONDITION	OPA355 OPA2355 OPA3355 MIN	TYP	MAX	UNITS
OFFSET VOLTAGE						
Input Offset Voltage	V_{OS}	V_S = +5V		±2	±9	mV
		Specified Temperature Range			**±15**	**mV**
vs Temperature	**dV_{OS}/dT**	**Specified Temperature Range**		**±7**		**µV/°C**
vs Power Supply	PSRR	V_S = +2.7V to +5.5V, V_{CM} = V_S/2 – 0.15V		±80	±350	µV/V
INPUT BIAS CURRENT						
Input Bias Current	I_B			3	±50	pA
Input Offset Current	I_{OS}			±1	±50	pA
NOISE						
Input Noise Voltage Density	e_n	f = 1MHz		5.8		$nV/\sqrt{Hz}$
Current Noise Density	i_n	f = 1MHz		50		$fA/\sqrt{Hz}$
INPUT VOLTAGE RANGE						
Common-Mode Voltage Range	V_{CM}		(V–) – 0.1		(V+) – 1.5	V
Common-Mode Rejection Ratio	CMRR	V_S = +5.5V, –0.1V < V_{CM} < +4.0V	66	80		dB
		Specified Temperature Range	**66**			**dB**
INPUT IMPEDANCE						
Differential				10^{13} || 1.5		Ω || pF
Common-Mode				10^{13} || 1.5		Ω || pF
OPEN-LOOP GAIN		V_S = +5V, 0.3V < V_O < 4.7V	84	92		dB
OPA355		**V_S = +5V, 0.3V < V_O < 4.7V**	**80**			**dB**
OPA2355, OPA3355		**V_S = +5V, 0.4V < V_O < 4.6V**	**80**			**dB**
FREQUENCY RESPONSE						
Small-Signal Bandwidth	f_{-3dB}	G = +1, V_O = 100mVp-p, R_F = 0Ω		450		MHz
	f_{-3dB}	G = +2, V_O = 100mVp-p, R_L = 50Ω		100		MHz
	f_{-3dB}	G = +2, V_O = 100mVp-p, R_L = 150Ω		170		MHz
	f_{-3dB}	G = +2, V_O = 100mVp-p, R_L = 1kΩ		200		MHz
Gain-Bandwidth Product	GBW	G = +10, R_L = 1kΩ		200		MHz
Bandwidth for 0.1dB Gain Flatness	$f_{0.1dB}$	G = +2, V_O = 100mVp-p, R_F = 560Ω		75		MHz
Slew Rate	SR	V_S = +5V, G = +2, 4V Output Step		300/–360		V/µs
Rise-and-Fall Time		G = +2, V_O = 200mVp-p, 10% to 90%		2.4		ns
		G = +2, V_O = 2Vp-p, 10% to 90%		8		ns
Settling Time, 0.1%		V_S = +5V, G = +2, 2V Output Step		30		ns
0.01%		V_S = +5V, G = +2, 2V Output Step		120		ns
Overload Recovery Time		V_{IN} • Gain = V_S		8		ns
Harmonic Distortion						
2nd-Harmonic		G = +2, f = 1MHz, V_O = 2Vp-p, R_L = 200Ω		–81		dBc
3rd-Harmonic		G = +2, f = 1MHz, V_O = 2Vp-p, R_L = 200Ω		–93		dBc
Differential Gain Error		NTSC, R_L = 150Ω		0.02		%
Differential Phase Error		NTSC, R_L = 150Ω		0.05		degrees
Channel-to-Channel Crosstalk	OPA2355	f = 5MHz		–90		dB
	OPA3355	f = 5MHz		–70		dB
OUTPUT						
Voltage Output Swing from Rail		V_S = +5V, R_L = 150Ω, A_{OL} > 84dB		0.2	0.3	V
Voltage Output Swing from Rail		V_S = +5V, R_L = 1kΩ		0.1		V
Output Current, Continuous(1)	I_O			±60		mA
Output Current, Peak(1)	I_O	V_S = +5V		±100		mA
Output Current, Peak(1)	I_O	V_S = +3V		±80		mA
Closed-Loop Output Impedance		f < 100kHz		0.02		Ω
POWER SUPPLY						
Specified Voltage Range	V_S		2.7		5.5	V
Operating Voltage Range				2.5 to 5.5		V
Quiescent Current (per amplifier)	I_Q	V_S = +5V, Enabled, I_O = 0		8.3	11	mA
		Specified Temperature Range			**14**	**mA**

NOTES: (1) See typical characteristic *Output Voltage Swing vs Output Current.* (2) Logic LOW and HIGH levels are CMOS logic compatible. They are referenced to V–.

ELECTRICAL CHARACTERISTICS: V_S = +2.7V to +5.5V Single-Supply (Cont.)

Boldface limits apply over the specified temperature range, **T_A = –40°C to +125°C.**

At T_A = +25°C, R_F = 604Ω, R_L = 150Ω, and connected to V_S/2, unless otherwise noted.

PARAMETER	CONDITION	OPA355 OPA2355 OPA3355 MIN	TYP	MAX	UNITS
SHUTDOWN					
Disabled (Logic-LOW Threshold)(2)				0.8	V
Enabled (Logic-HIGH Threshold)(2)		2			V
Enable Time			100		ns
Disable Time			30		ns
Shutdown Current (per amplifier)	V_S = +5V, Disabled		3.4	6	µA
THERMAL SHUTDOWN					
Junction Temperature					
Shutdown			160		°C
Reset from Shutdown			140		°C
TEMPERATURE RANGE					
Specified Range		–40		125	°C
Operating Range		–55		150	°C
Storage Range		–65		150	°C
Thermal Resistance θ_{JA}					°C/W
SOT-23-6, MSOP-10			150		°C/W
SO-8			125		°C/W
SO-14, TSSOP-14			100		°C/W

NOTES: (1) See typical characteristic *Output Voltage Swing vs Output Current.* (2) Logic LOW and HIGH levels are CMOS logic compatible. They are referenced to V–.

TYPICAL CHARACTERISTICS

At T_A = +25°C, V_S = 5V, G = +2, R_F = 604Ω, and R_L = 150Ω connected to V_S/2, unless otherwise noted.

NONINVERTING SMALL-SIGNAL FREQUENCY RESPONSE

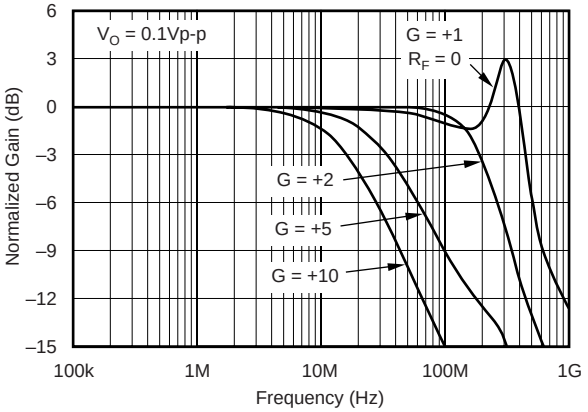

INVERTING SMALL-SIGNAL FREQUENCY RESPONSE

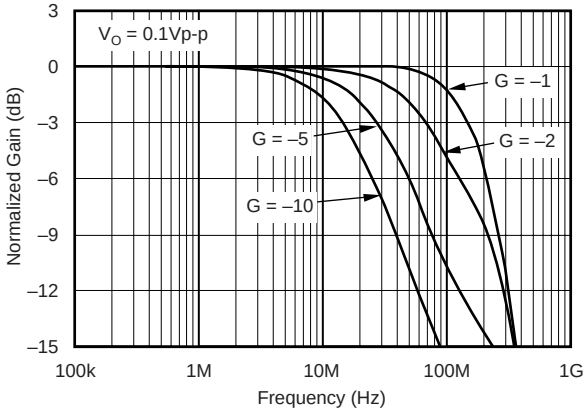

NON-INVERTING SMALL-SIGNAL STEP RESPONSE

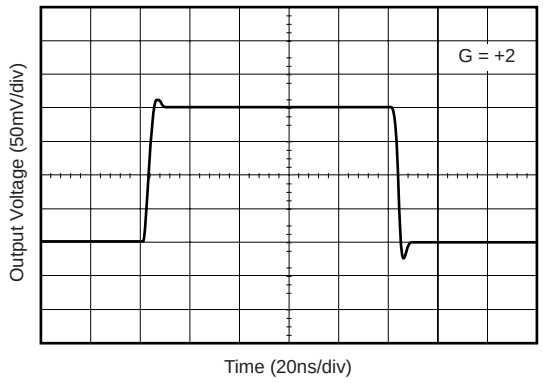

NONINVERTING LARGE-SIGNAL STEP RESPONSE

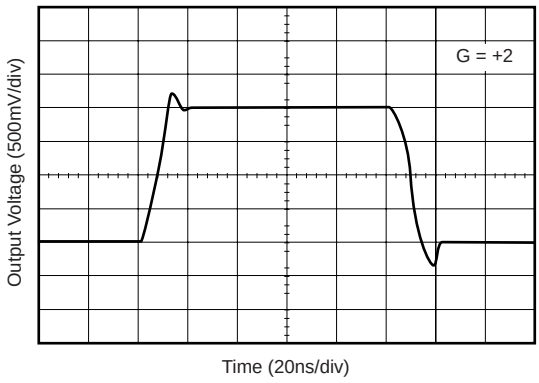

LARGE-SIGNAL DISABLE/ENABLE RESPONSE

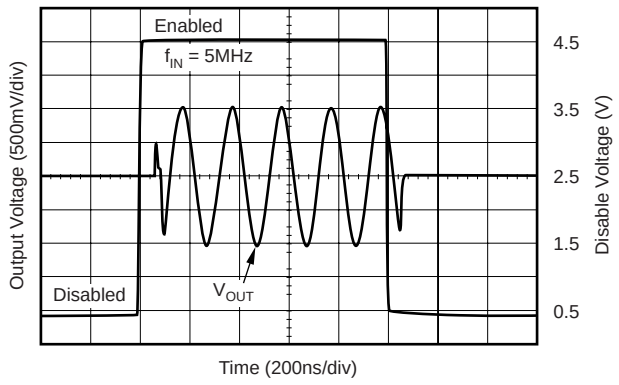

0.1dB GAIN FLATNESS FOR VARIOUS R_F

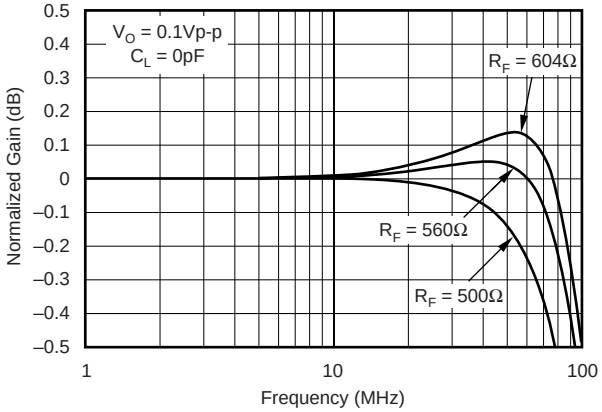

TYPICAL CHARACTERISTICS (Cont.)

At T_A = +25°C, V_S = 5V, G = +2, R_F = 604Ω, and R_L = 150Ω connected to V_S/2, unless otherwise noted.

HARMONIC DISTORTION vs OUTPUT VOLTAGE

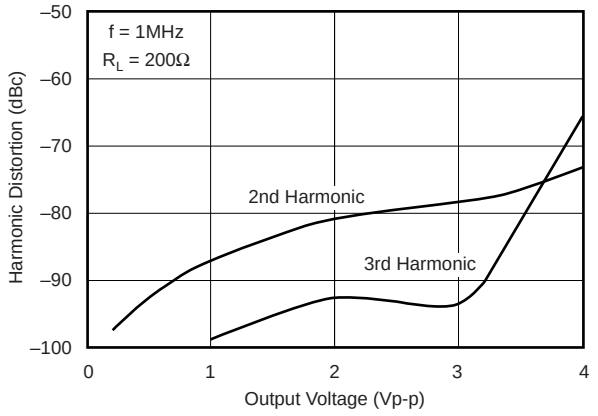

HARMONIC DISTORTION vs NONINVERTING GAIN

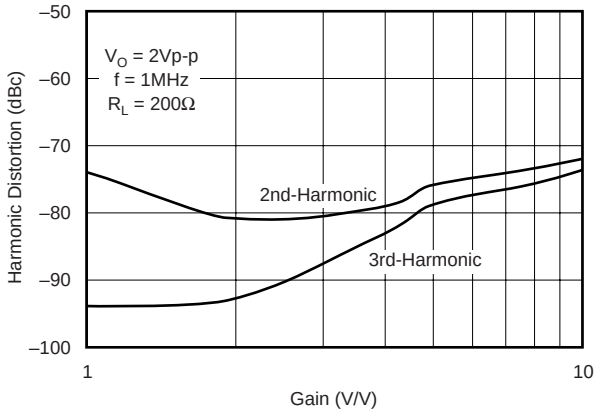

HARMONIC DISTORTION vs INVERTING GAIN

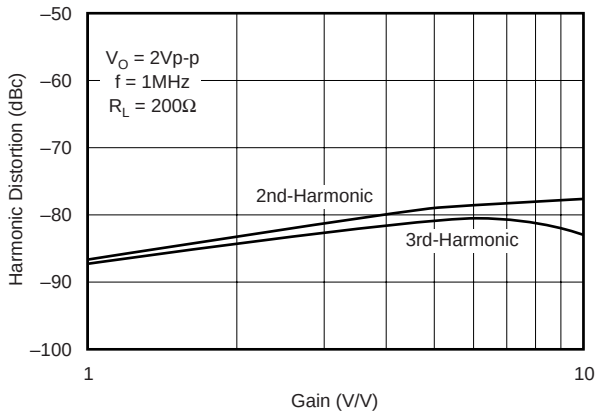

HARMONIC DISTORTION vs FREQUENCY

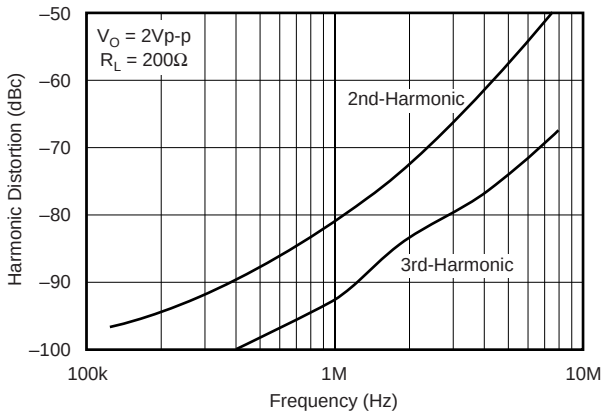

HARMONIC DISTORTION vs LOAD RESISTANCE

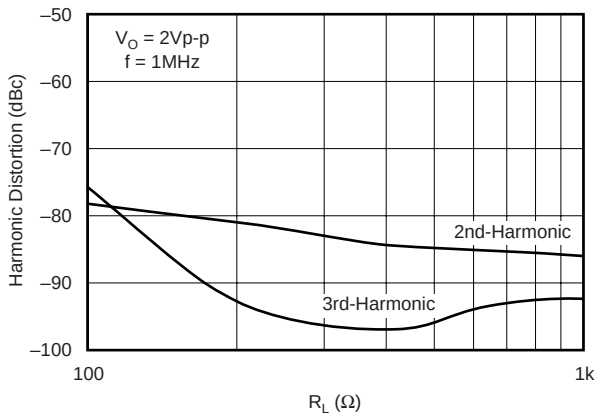

INPUT VOLTAGE AND CURRENT NOISE SPECTRAL DENSITY vs FREQUENCY

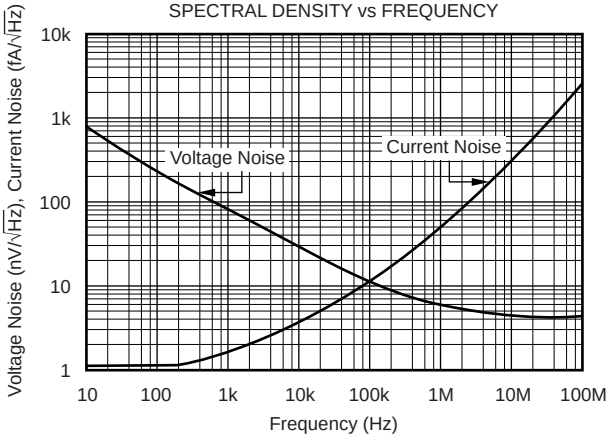

TYPICAL CHARACTERISTICS (Cont.)

At T_A = +25°C, V_S = 5V, G = +2, R_F = 604Ω, and R_L = 150Ω connected to V_S/2, unless otherwise noted.

FREQUENCY RESPONSE FOR VARIOUS R_L

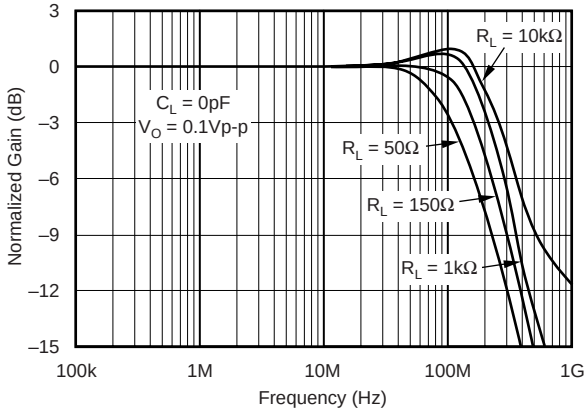

FREQUENCY RESPONSE FOR VARIOUS C_L

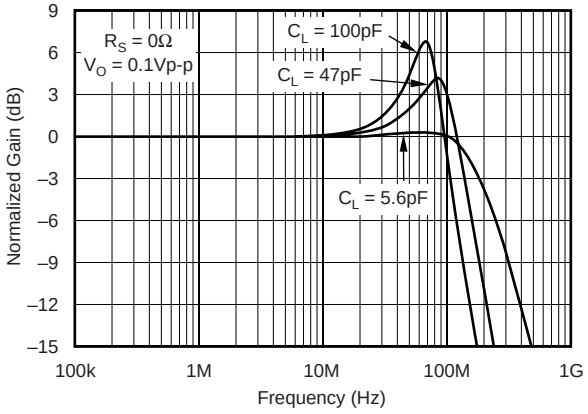

RECOMMENDED R_S vs CAPACITIVE LOAD

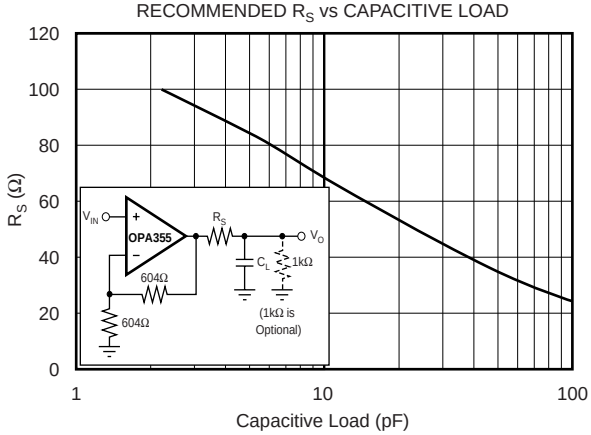

FREQUENCY RESPONSE vs CAPACITIVE LOAD

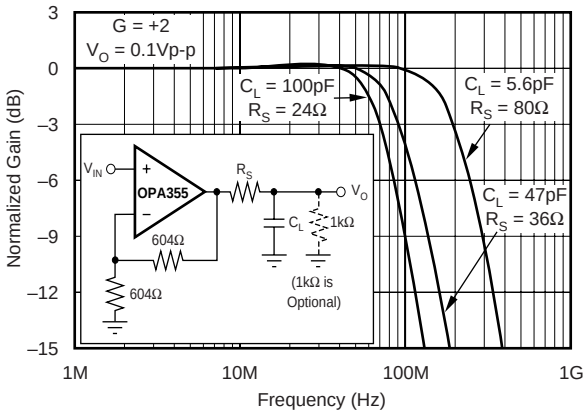

COMMON-MODE REJECTION RATIO AND
POWER-SUPPLY REJECTION RATIO vs FREQUENCY

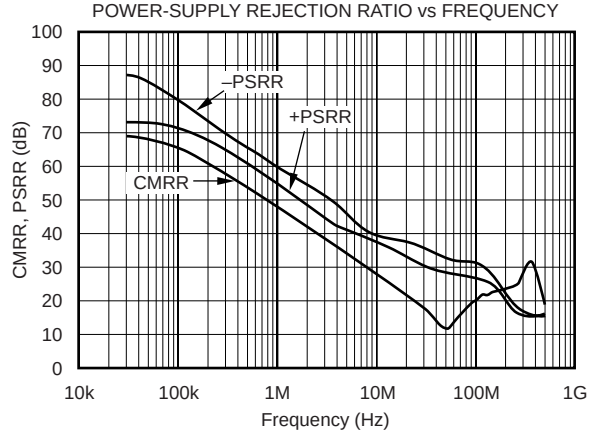

OPEN-LOOP GAIN AND PHASE

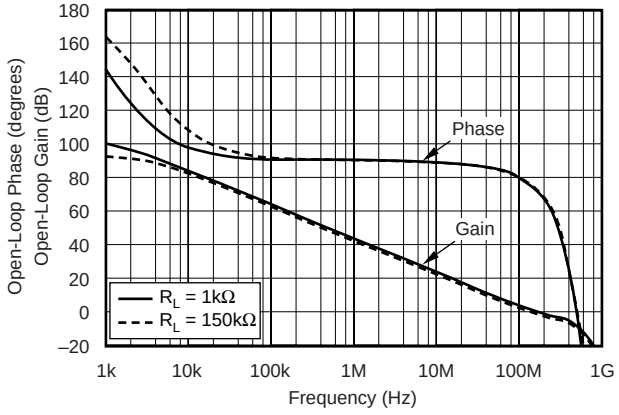

TYPICAL CHARACTERISTICS (Cont.)

At T_A = +25°C, V_S = 5V, G = +2, R_F = 604Ω, and R_L = 150Ω connected to V_S/2, unless otherwise noted.

COMPOSITE VIDEO
DIFFERENTIAL GAIN AND PHASE

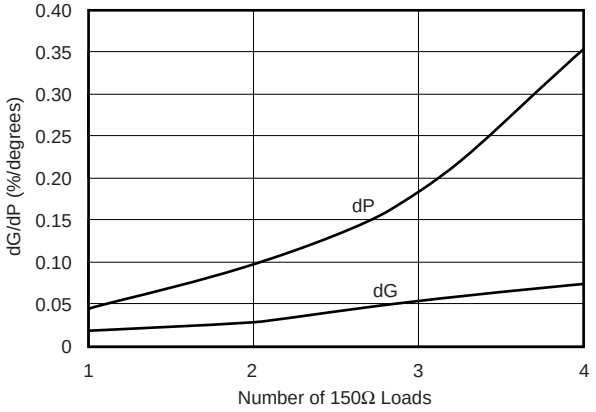

INPUT BIAS CURRENT vs TEMPERATURE

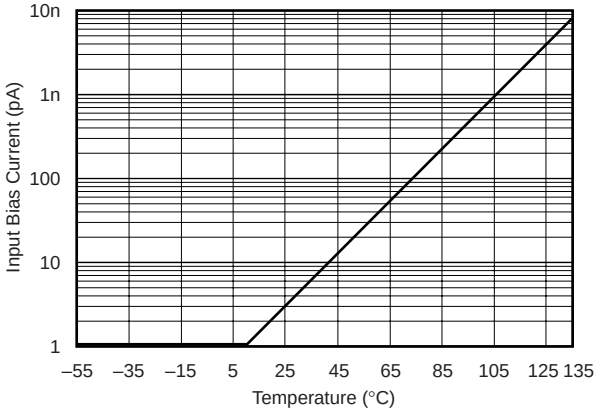

OUTPUT VOLTAGE SWING vs OUTPUT CURRENT
FOR V_S = 3V

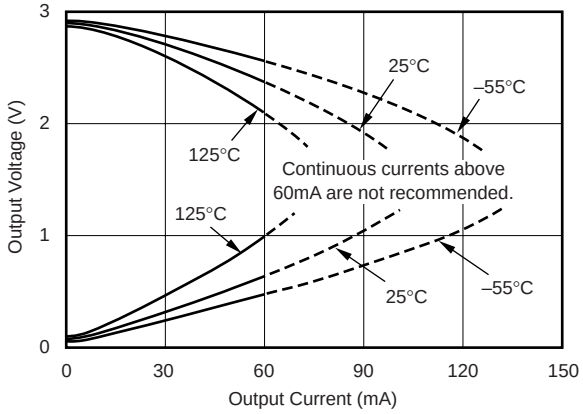

SUPPLY CURRENT vs TEMPERATURE

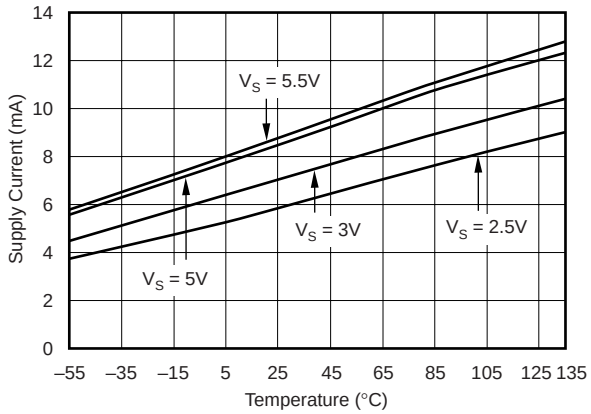

OUTPUT VOLTAGE SWING vs OUTPUT CURRENT
FOR V_S = 5V

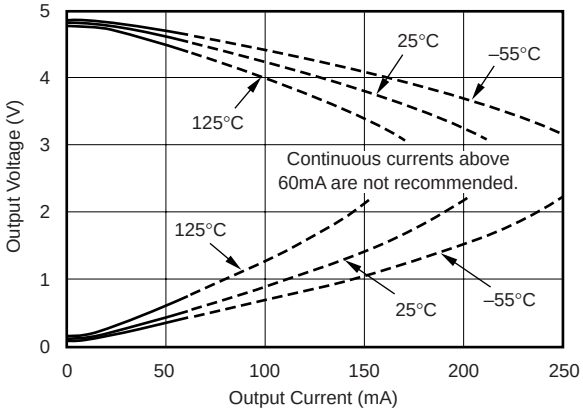

SHUTDOWN CURRENT vs TEMPERATURE

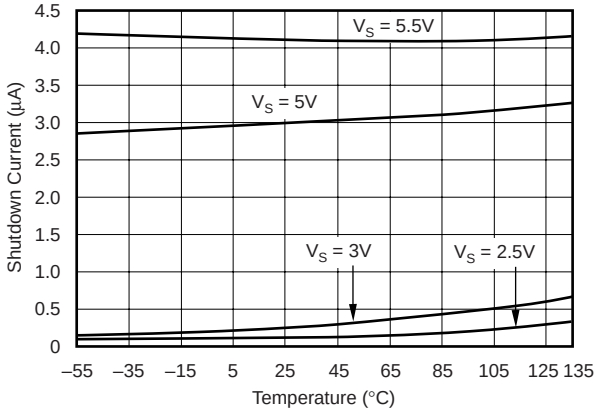

TYPICAL CHARACTERISTICS (Cont.)

At T_A = +25°C, V_S = 5V, G = +2, R_F = 604Ω, and R_L = 150Ω connected to V_S/2, unless otherwise noted.

CLOSED-LOOP OUTPUT IMPEDANCE vs FREQUENCY

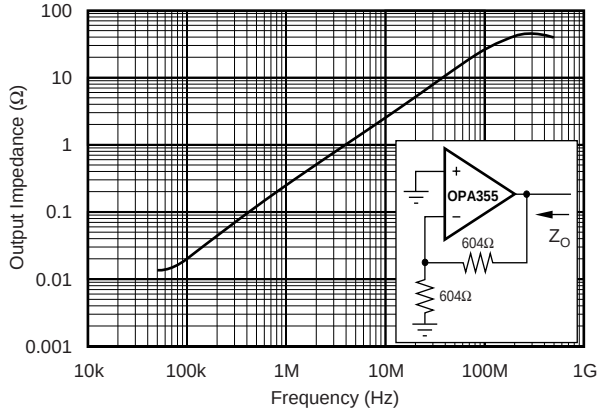

MAXIMUM OUTPUT VOLTAGE vs FREQUENCY

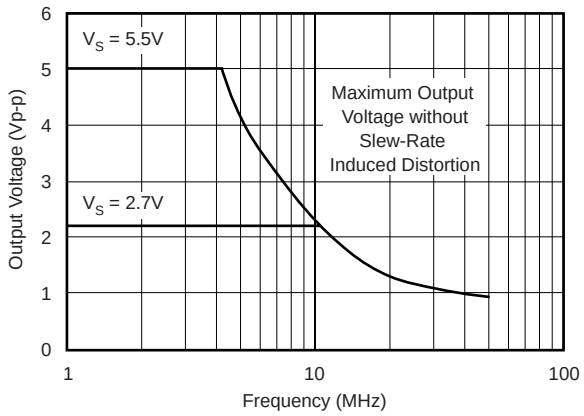

OUTPUT SETTLING TIME TO 0.1%

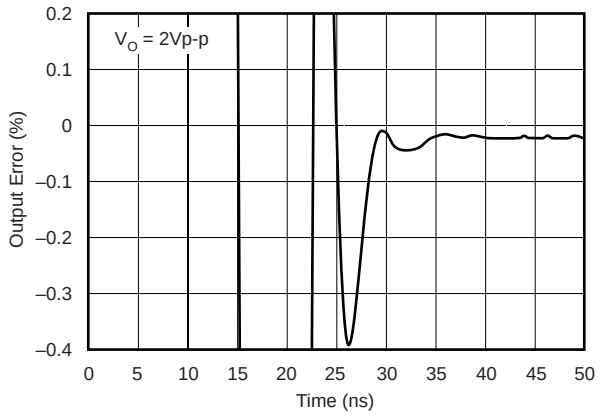

OPEN-LOOP GAIN vs TEMPERATURE

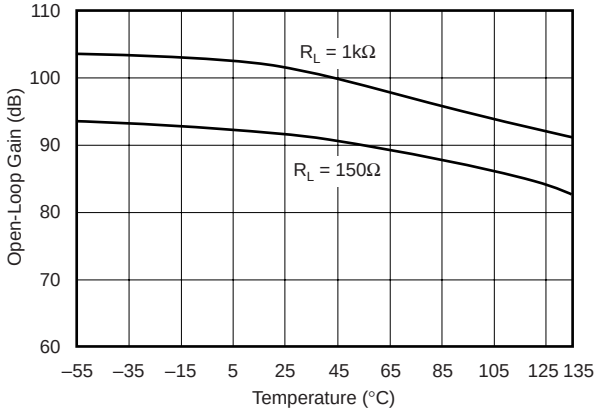

OFFSET VOLTAGE PRODUCTION DISTRIBUTION

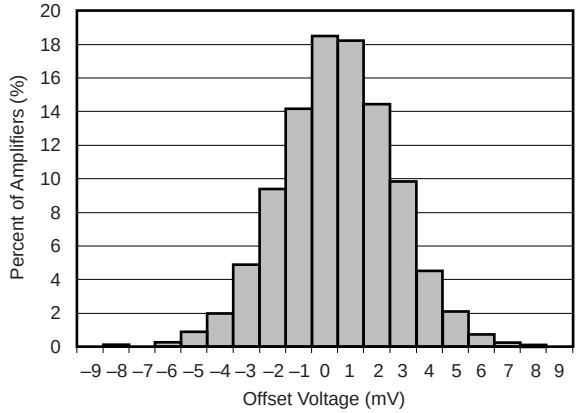

COMMON-MODE REJECTION RATIO AND POWER-SUPPLY REJECTION RATIO vs TEMPERATURE

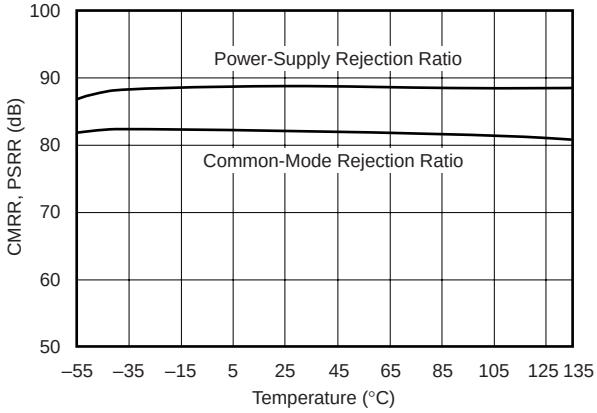

TYPICAL CHARACTERISTICS (Cont.)

At T_A = +25°C, V_S = 5V, G = +2, R_F = 604Ω, and R_L = 150Ω connected to V_S/2, unless otherwise noted.

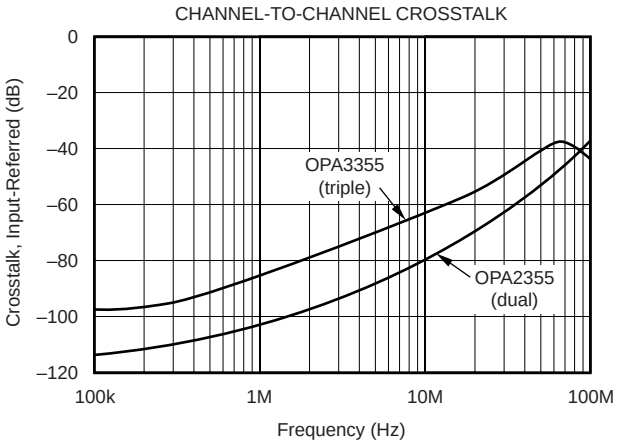

APPLICATIONS INFORMATION

The OPA355 series is a CMOS, high-speed, voltage-feedback, operational amplifier designed for video and other general-purpose applications. It is available as a single, dual, or triple op amp.

The amplifier features a 200MHz gain bandwidth and 360V/µs slew rate, but it is unity-gain stable and can be operated as a +1V/V voltage follower.

Its input common-mode voltage range includes ground, allowing the OPA355 to be used in virtually any single-supply application up to a supply voltage of +5.5V.

PCB LAYOUT

Good high-frequency PC board layout techniques should be employed for the OPA355. Generous use of ground planes, short direct signal traces, and a suitable bypass capacitor located at the V+ pin will assure clean, stable operation. Large areas of copper also provide a means of dissipating heat that is generated within the amplifier in normal operation.

Sockets are definitely not recommended for use with any high-speed amplifier.

A 10nF ceramic bypass capacitor is the minimum recommended value; adding a 1µF or larger tantalum capacitor in parallel can be beneficial when driving a low-resistance load. Providing adequate bypass capacitance is essential to achieving very low harmonic and intermodulation distortion.

OPERATING VOLTAGE

The OPA355 is specified over a power-supply range of +2.7V to +5.5V (±1.35V to ±2.75V). However, the supply voltage may range from +2.5V to +5.5V (±1.25V to ±2.75V). Supply voltages higher than 7.5V (absolute maximum) can permanently damage the amplifier.

Parameters that vary significantly over supply voltage or temperature are shown in the Typical Characteristics section of this data sheet.

ENABLE FUNCTION

The OPA355 can be enabled by applying a TTL HIGH voltage level to the Enable pin. Conversely, a TTL LOW voltage level will disable the amplifier, reducing its supply current from 8.3mA to only 3.4µA per amplifier. This pin voltage is referenced to single-supply ground. When using a split-supply, such as ±2.5V, the enable/disable voltage levels will be referenced to V–. Independent Enable pins are available for each channel, providing maximum design flexibility. For portable battery-operated applications, this feature can be used to greatly reduce the average current and thereby extend battery life.

The Enable input can be modeled as a CMOS input gate with a 100kΩ pull-up resistor to V+. Left open, the Enable pin will assume a logic HIGH, and the amplifier will be on.

The Enable time is 100ns and the disable time is only 30ns. This allows the OPA355 to be operated as a "gated" amplifier, or to have its output multiplexed onto a common output bus. When disabled, the output assumes a high-impedance state.

OUTPUT DRIVE

The output stage can supply high short-circuit current (typically over 200mA). Therefore, an on-chip thermal shutdown circuit is provided to protect the OPA355 from dangerously high junction temperatures. At 160°C, the protection circuit will shut down the amplifier. Normal operation will resume when the junction temperature cools to below 140°C.

NOTE: it is not recommended to run a continuous DC current in excess of ±60mA. Refer to the Typical Characteristics, *Output Voltage Swing vs Output Current*.

VIDEO

The OPA355 output stage is capable of driving a standard back-terminated 75Ω video cable. By back-terminating a transmission line, it does not exhibit a capacitive load to its driver. A properly back-terminated 75Ω cable does not appear as capacitance; it presents only a 150Ω resistive load to the OPA355 output.

The OPA355 can be used as an amplifier for RGB graphic signals, which have a voltage of zero at the video black level, by offsetting and AC-coupling the signal, as shown in Figure 1.

WIDEBAND VIDEO MULTIPLEXING

One common application for video speed amplifiers which include an enable pin is to wire multiple amplifier outputs together, then select which one of several possible video inputs to source onto a single line. This simple *Wired-OR Video Multiplexer* can be easily implemented using the OPA357; see Figure 2.

INPUT AND ESD PROTECTION

All OPA355 pins are static protected with internal ESD protection diodes tied to the supplies; see Figure 3.

These diodes will provide overdrive protection if the current is externally limited to 10mA by the source or by a resistor.

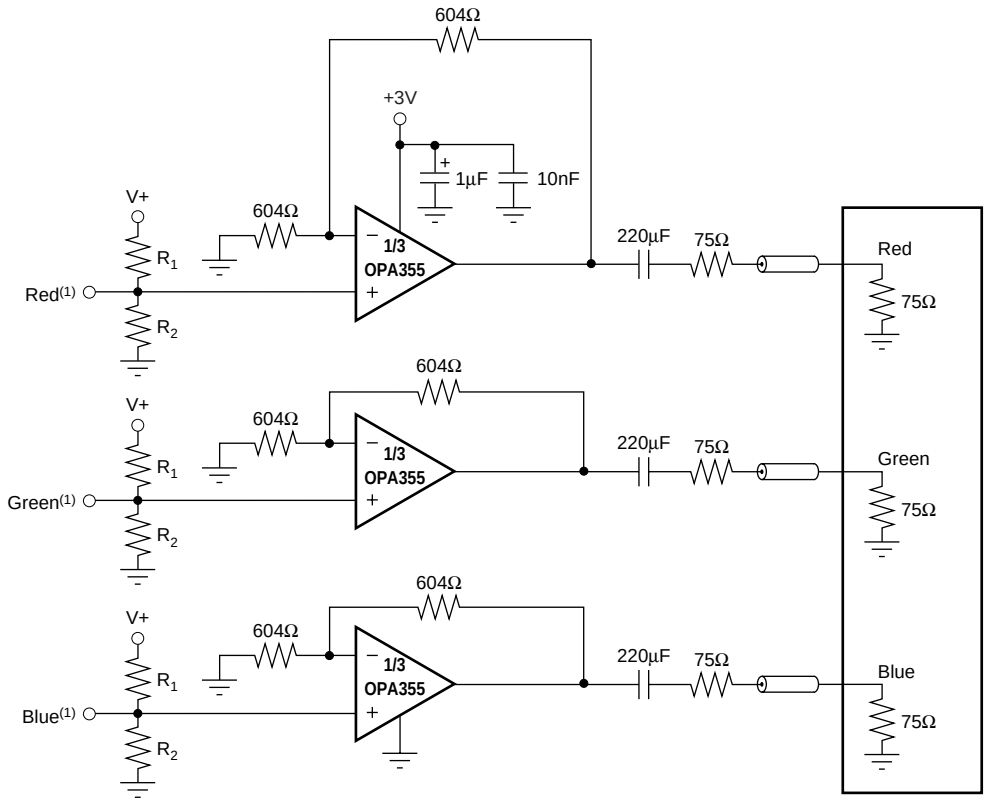

NOTE: (1) Source video signal offset 300mV above ground to accommodate op amp swing-to-ground capability.

FIGURE 1. RGB Cable Driver.

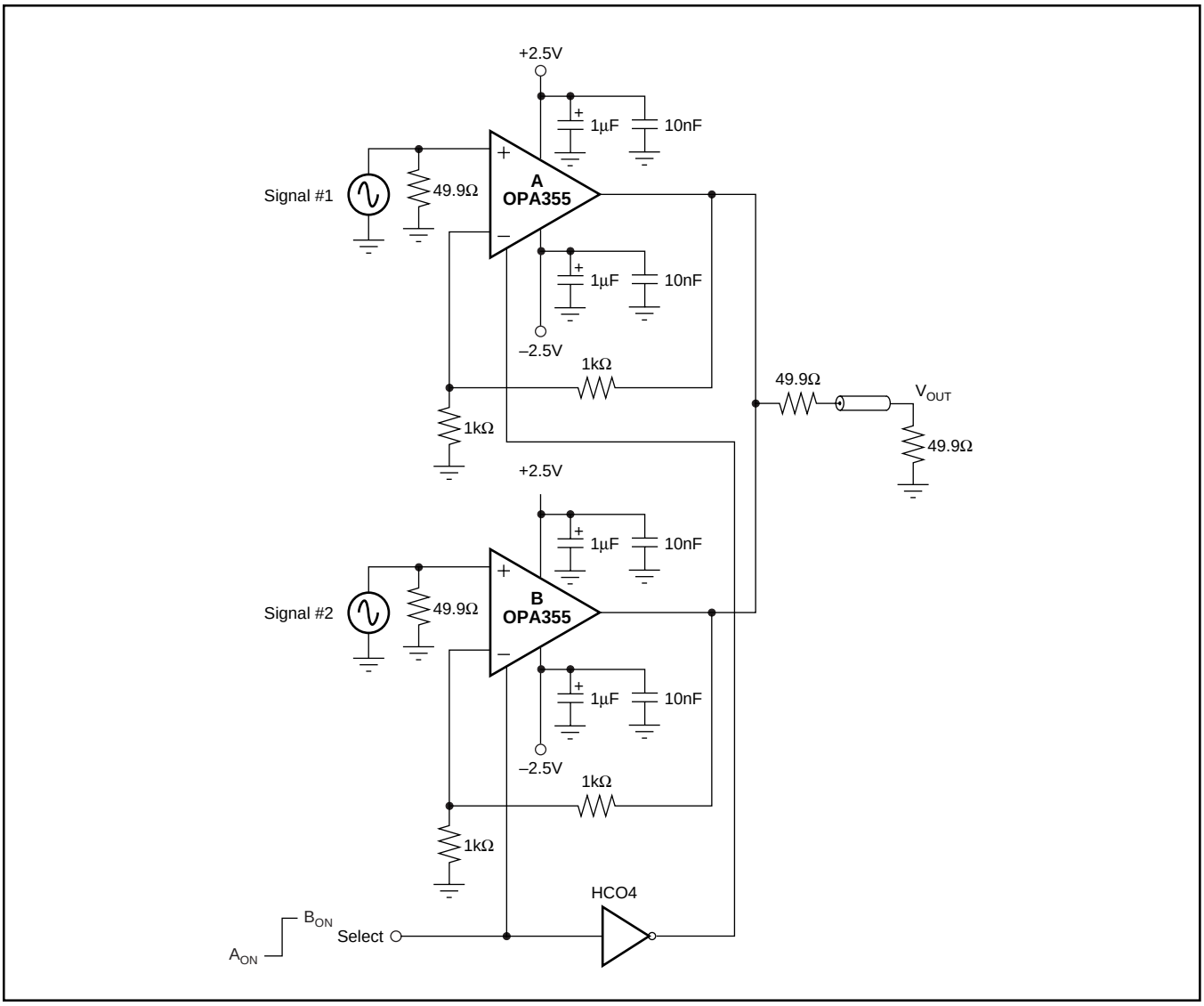

FIGURE 2. Multiplexed Output.

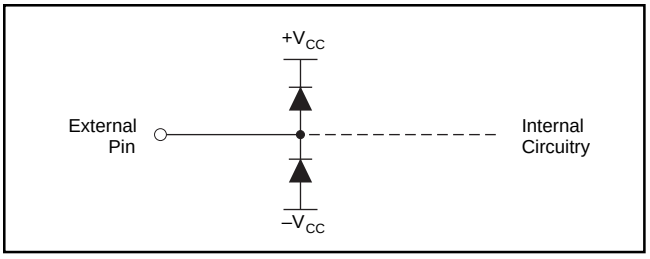

FIGURE 3. Internal ESD Protection.

PACKAGING INFORMATION

Orderable Device	Status (1)	Package Type	Package Drawing	Pins	Package Qty	Eco Plan (2)	Lead/ Ball Finish	MSL Peak Temp (3)	Samples (Requires Login)
OPA2355DGSA/250	ACTIVE	MSOP	DGS	10	250	Green (RoHS & no Sb/Br)	CU NIPDAUAG	Level-2-260C-1 YEAR	Request Free Samples
OPA2355DGSA/250G4	ACTIVE	MSOP	DGS	10	250	Green (RoHS & no Sb/Br)	CU NIPDAUAG	Level-2-260C-1 YEAR	Request Free Samples
OPA3355EA/250	ACTIVE	TSSOP	PW	14	250	Green (RoHS & no Sb/Br)	CU NIPDAU	Level-2-260C-1 YEAR	Request Free Samples
OPA3355EA/250G4	ACTIVE	TSSOP	PW	14	250	Green (RoHS & no Sb/Br)	CU NIPDAU	Level-2-260C-1 YEAR	Request Free Samples
OPA3355EA/2K5	ACTIVE	TSSOP	PW	14	2500	Green (RoHS & no Sb/Br)	CU NIPDAU	Level-2-260C-1 YEAR	Purchase Samples
OPA3355EA/2K5G4	ACTIVE	TSSOP	PW	14	2500	Green (RoHS & no Sb/Br)	CU NIPDAU	Level-2-260C-1 YEAR	Purchase Samples
OPA3355UA	ACTIVE	SOIC	D	14	50	Green (RoHS & no Sb/Br)	CU NIPDAU	Level-2-260C-1 YEAR	Request Free Samples
OPA3355UA/2K5	ACTIVE	SOIC	D	14	2500	Green (RoHS & no Sb/Br)	CU NIPDAU	Level-2-260C-1 YEAR	Purchase Samples
OPA3355UA/2K5G4	ACTIVE	SOIC	D	14	2500	Green (RoHS & no Sb/Br)	CU NIPDAU	Level-2-260C-1 YEAR	Purchase Samples
OPA3355UAG4	ACTIVE	SOIC	D	14	50	Green (RoHS & no Sb/Br)	CU NIPDAU	Level-2-260C-1 YEAR	Request Free Samples
OPA355NA/250	ACTIVE	SOT-23	DBV	6	250	Green (RoHS & no Sb/Br)	CU NIPDAU	Level-2-260C-1 YEAR	Contact TI Distributor or Sales Office
OPA355NA/250G4	ACTIVE	SOT-23	DBV	6	250	Green (RoHS & no Sb/Br)	CU NIPDAU	Level-2-260C-1 YEAR	Contact TI Distributor or Sales Office
OPA355NA/3K	ACTIVE	SOT-23	DBV	6	3000	Green (RoHS & no Sb/Br)	CU NIPDAU	Level-2-260C-1 YEAR	Request Free Samples
OPA355NA/3KG4	ACTIVE	SOT-23	DBV	6	3000	Green (RoHS & no Sb/Br)	CU NIPDAU	Level-2-260C-1 YEAR	Request Free Samples
OPA355UA	ACTIVE	SOIC	D	8	75	Green (RoHS & no Sb/Br)	CU NIPDAU	Level-2-260C-1 YEAR	Request Free Samples
OPA355UA/2K5	ACTIVE	SOIC	D	8	2500	Green (RoHS & no Sb/Br)	CU NIPDAU	Level-2-260C-1 YEAR	Purchase Samples
OPA355UA/2K5G4	ACTIVE	SOIC	D	8	2500	Green (RoHS & no Sb/Br)	CU NIPDAU	Level-2-260C-1 YEAR	Purchase Samples

Orderable Device	Status (1)	Package Type	Package Drawing	Pins	Package Qty	Eco Plan (2)	Lead/ Ball Finish	MSL Peak Temp (3)	Samples (Requires Login)
OPA355UAG4	ACTIVE	SOIC	D	8	75	Green (RoHS & no Sb/Br)	CU NIPDAU	Level-2-260C-1 YEAR	Request Free Samples

(1) The marketing status values are defined as follows:
ACTIVE: Product device recommended for new designs.
LIFEBUY: TI has announced that the device will be discontinued, and a lifetime-buy period is in effect.
NRND: Not recommended for new designs. Device is in production to support existing customers, but TI does not recommend using this part in a new design.
PREVIEW: Device has been announced but is not in production. Samples may or may not be available.
OBSOLETE: TI has discontinued the production of the device.

(2) Eco Plan - The planned eco-friendly classification: Pb-Free (RoHS), Pb-Free (RoHS Exempt), or Green (RoHS & no Sb/Br) - please check http://www.ti.com/productcontent for the latest availability information and additional product content details.
TBD: The Pb-Free/Green conversion plan has not been defined.
Pb-Free (RoHS): TI's terms "Lead-Free" or "Pb-Free" mean semiconductor products that are compatible with the current RoHS requirements for all 6 substances, including the requirement that lead not exceed 0.1% by weight in homogeneous materials. Where designed to be soldered at high temperatures, TI Pb-Free products are suitable for use in specified lead-free processes.
Pb-Free (RoHS Exempt): This component has a RoHS exemption for either 1) lead-based flip-chip solder bumps used between the die and package, or 2) lead-based die adhesive used between the die and leadframe. The component is otherwise considered Pb-Free (RoHS compatible) as defined above.
Green (RoHS & no Sb/Br): TI defines "Green" to mean Pb-Free (RoHS compatible), and free of Bromine (Br) and Antimony (Sb) based flame retardants (Br or Sb do not exceed 0.1% by weight in homogeneous material)

(3) MSL, Peak Temp. -- The Moisture Sensitivity Level rating according to the JEDEC industry standard classifications, and peak solder temperature.

Important Information and Disclaimer: The information provided on this page represents TI's knowledge and belief as of the date that it is provided. TI bases its knowledge and belief on information provided by third parties, and makes no representation or warranty as to the accuracy of such information. Efforts are underway to better integrate information from third parties. TI has taken and continues to take reasonable steps to provide representative and accurate information but may not have conducted destructive testing or chemical analysis on incoming materials and chemicals. TI and TI suppliers consider certain information to be proprietary, and thus CAS numbers and other limited information may not be available for release.

In no event shall TI's liability arising out of such information exceed the total purchase price of the TI part(s) at issue in this document sold by TI to Customer on an annual basis.

TAPE AND REEL INFORMATION

REEL DIMENSIONS

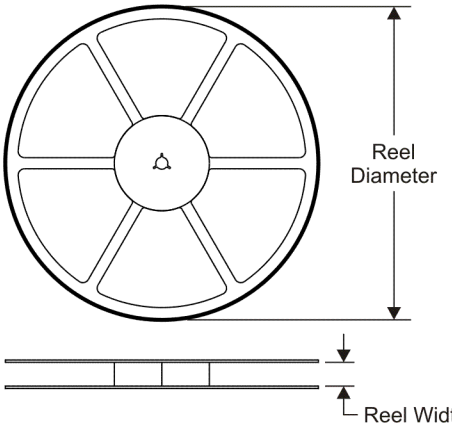

TAPE DIMENSIONS

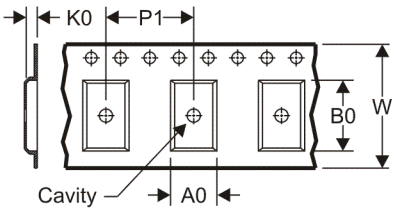

A0	Dimension designed to accommodate the component width
B0	Dimension designed to accommodate the component length
K0	Dimension designed to accommodate the component thickness
W	Overall width of the carrier tape
P1	Pitch between successive cavity centers

QUADRANT ASSIGNMENTS FOR PIN 1 ORIENTATION IN TAPE

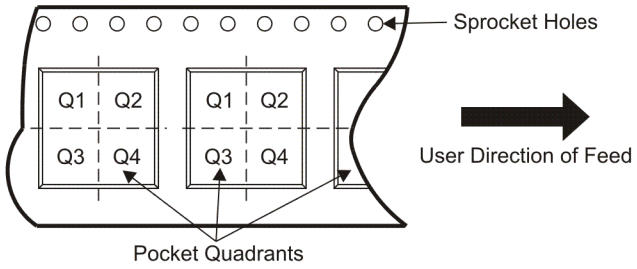

*All dimensions are nominal

Device	Package Type	Package Drawing	Pins	SPQ	Reel Diameter (mm)	Reel Width W1 (mm)	A0 (mm)	B0 (mm)	K0 (mm)	P1 (mm)	W (mm)	Pin1 Quadrant
OPA2355DGSA/250	MSOP	DGS	10	250	180.0	12.4	5.3	3.4	1.4	8.0	12.0	Q1
OPA3355EA/250	TSSOP	PW	14	250	180.0	12.4	6.9	5.6	1.6	8.0	12.0	Q1
OPA3355EA/2K5	TSSOP	PW	14	2500	330.0	12.4	6.9	5.6	1.6	8.0	12.0	Q1
OPA3355UA/2K5	SOIC	D	14	2500	330.0	16.4	6.5	9.0	2.1	8.0	16.0	Q1
OPA355UA/2K5	SOIC	D	8	2500	330.0	12.4	6.4	5.2	2.1	8.0	12.0	Q1

TAPE AND REEL BOX DIMENSIONS

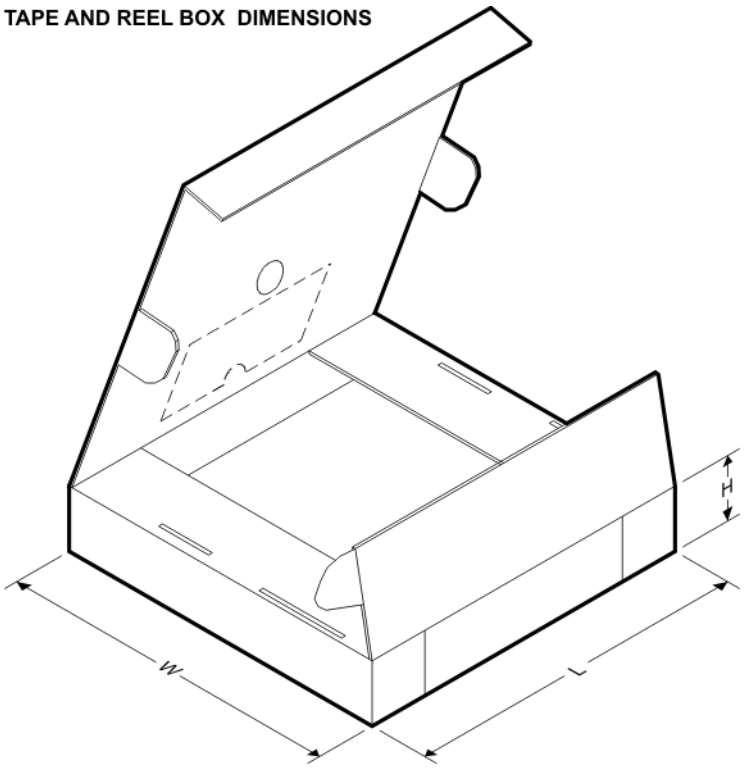

*All dimensions are nominal

Device	Package Type	Package Drawing	Pins	SPQ	Length (mm)	Width (mm)	Height (mm)
OPA2355DGSA/250	MSOP	DGS	10	250	190.5	212.7	31.8
OPA3355EA/250	TSSOP	PW	14	250	190.5	212.7	31.8
OPA3355EA/2K5	TSSOP	PW	14	2500	346.0	346.0	29.0
OPA3355UA/2K5	SOIC	D	14	2500	346.0	346.0	33.0
OPA355UA/2K5	SOIC	D	8	2500	346.0	346.0	29.0

DBV (R–PDSO–G6) PLASTIC SMALL–OUTLINE PACKAGE

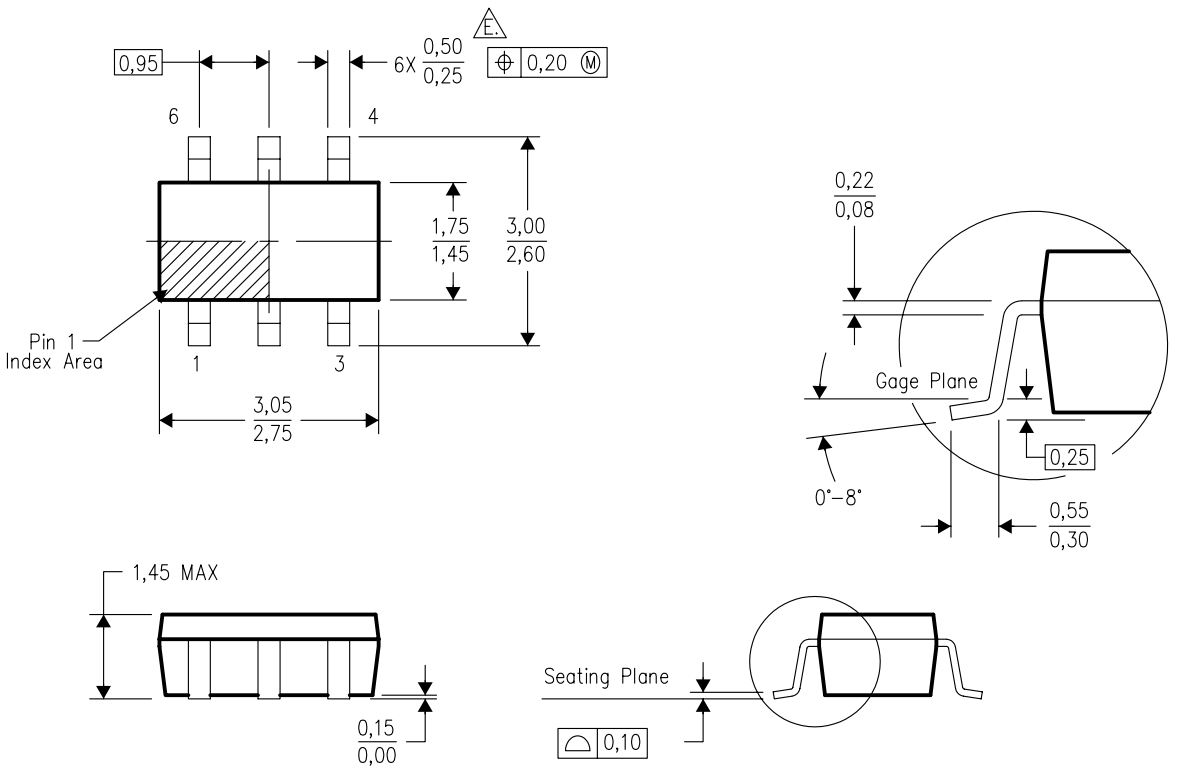

4073253–5/K 03/2006

NOTES:
A. All linear dimensions are in millimeters.
B. This drawing is subject to change without notice.
C. Body dimensions do not include mold flash or protrusion. Mold flash and protrusion shall not exceed 0.15 per side.
D. Leads 1,2,3 may be wider than leads 4,5,6 for package orientation.
E. Falls within JEDEC MO–178 Variation AB, except minimum lead width.

DBV (R–PDSO–G6)

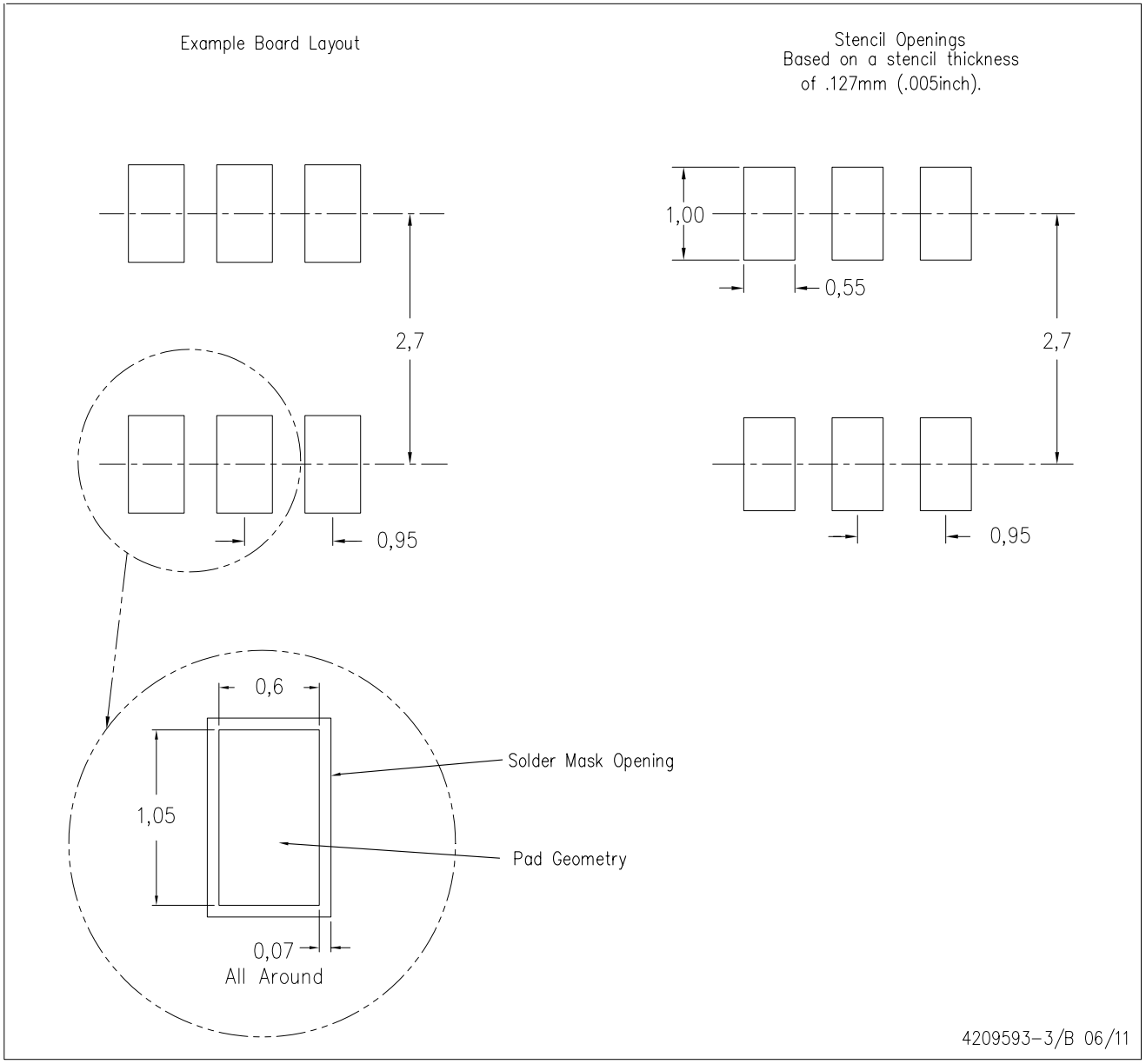

NOTES:
A. All linear dimensions are in millimeters.
B. This drawing is subject to change without notice.
C. Customers should place a note on the circuit board fabrication drawing not to alter the center solder mask defined pad.
D. Publication IPC–7351 is recommended for alternate designs.
E. Laser cutting apertures with trapezoidal walls and also rounding corners will offer better paste release. Customers should contact their board assembly site for stencil design recommendations. Example stencil design based on a 50% volumetric metal load solder paste. Refer to IPC–7525 for other stencil recommendations.

DGS (S–PDSO–G10) PLASTIC SMALL–OUTLINE PACKAGE

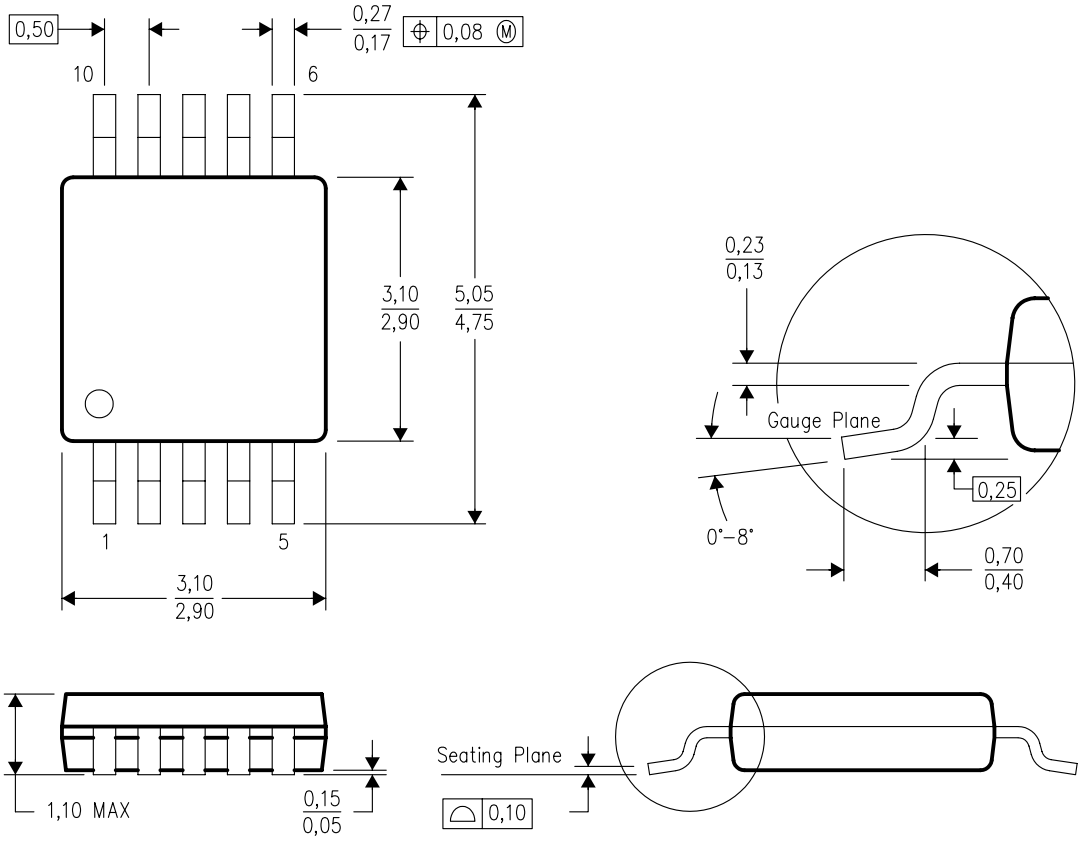

4073272/C 02/04

NOTES:
A. All linear dimensions are in millimeters.
B. This drawing is subject to change without notice.
C. Body dimensions do not include mold flash or protrusion.
D. Falls within JEDEC MO–187 variation BA.

D (R–PDSO–G14) PLASTIC SMALL OUTLINE

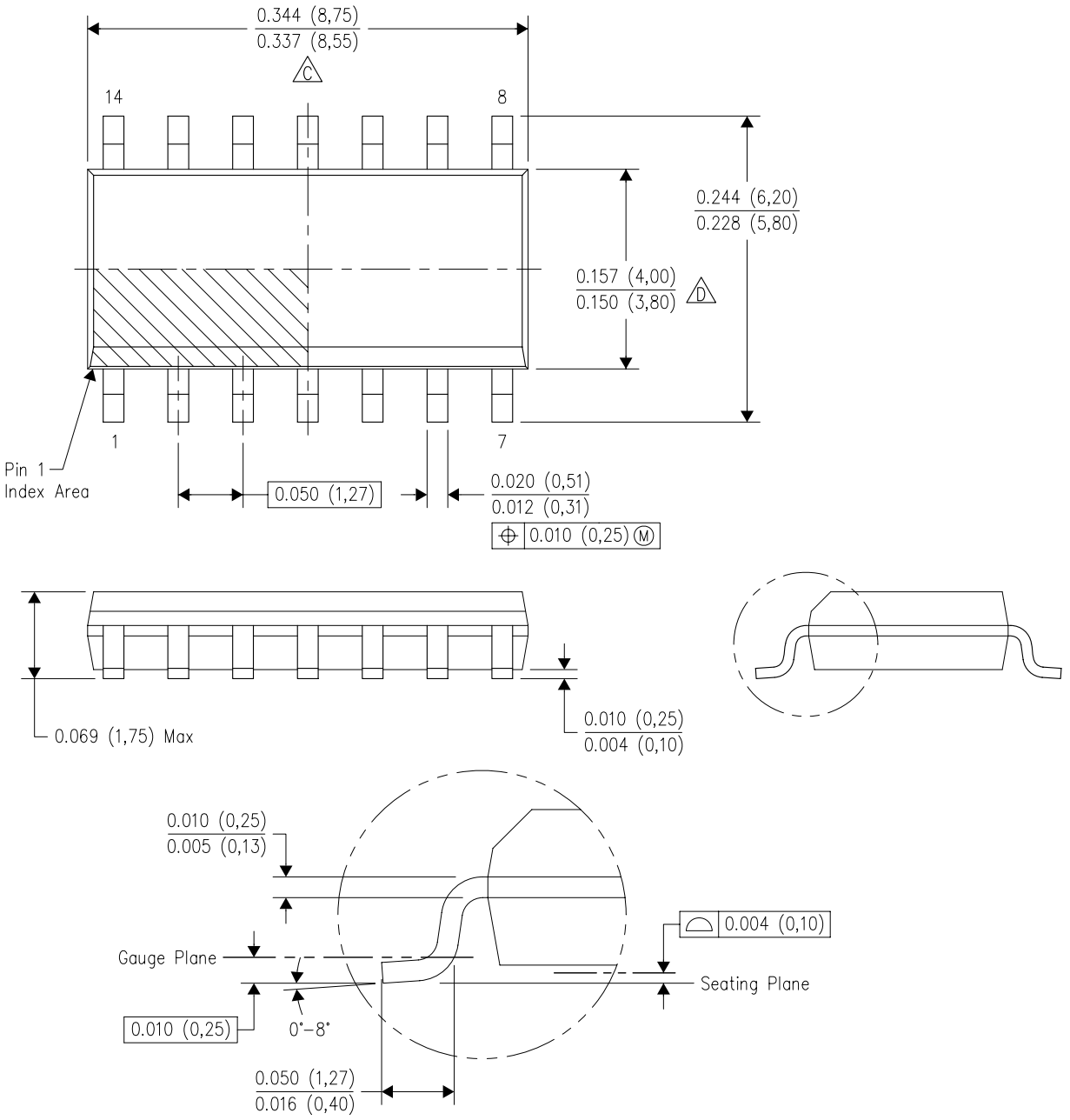

4040047–5/M 06/11

NOTES:
A. All linear dimensions are in inches (millimeters).
B. This drawing is subject to change without notice.
C. Body length does not include mold flash, protrusions, or gate burrs. Mold flash, protrusions, or gate burrs shall not exceed 0.006 (0,15) each side.
D. Body width does not include interlead flash. Interlead flash shall not exceed 0.017 (0,43) each side.
E. Reference JEDEC MS–012 variation AB.

PW (R–PDSO–G14) PLASTIC SMALL OUTLINE

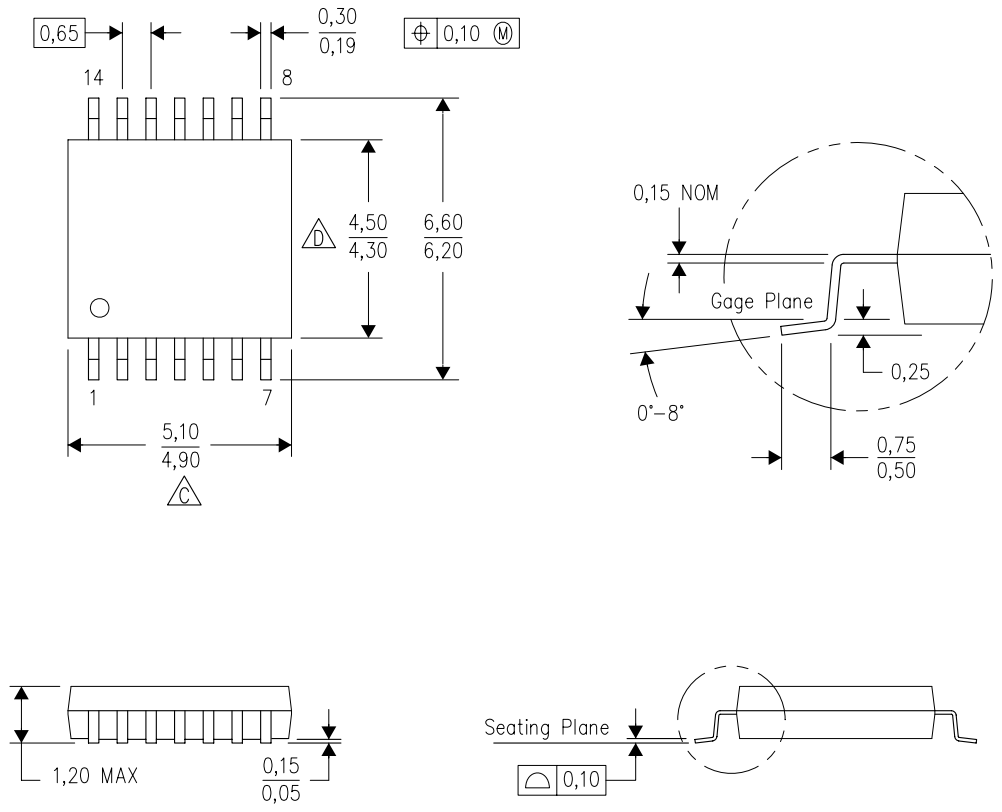

4040064–3/G 02/11

NOTES:
A. All linear dimensions are in millimeters. Dimensioning and tolerancing per ASME Y14.5M–1994.
B. This drawing is subject to change without notice.
C. Body length does not include mold flash, protrusions, or gate burrs. Mold flash, protrusions, or gate burrs shall not exceed 0,15 each side.
D. Body width does not include interlead flash. Interlead flash shall not exceed 0,25 each side.
E. Falls within JEDEC MO–153

PW (R–PDSO–G14) PLASTIC SMALL OUTLINE

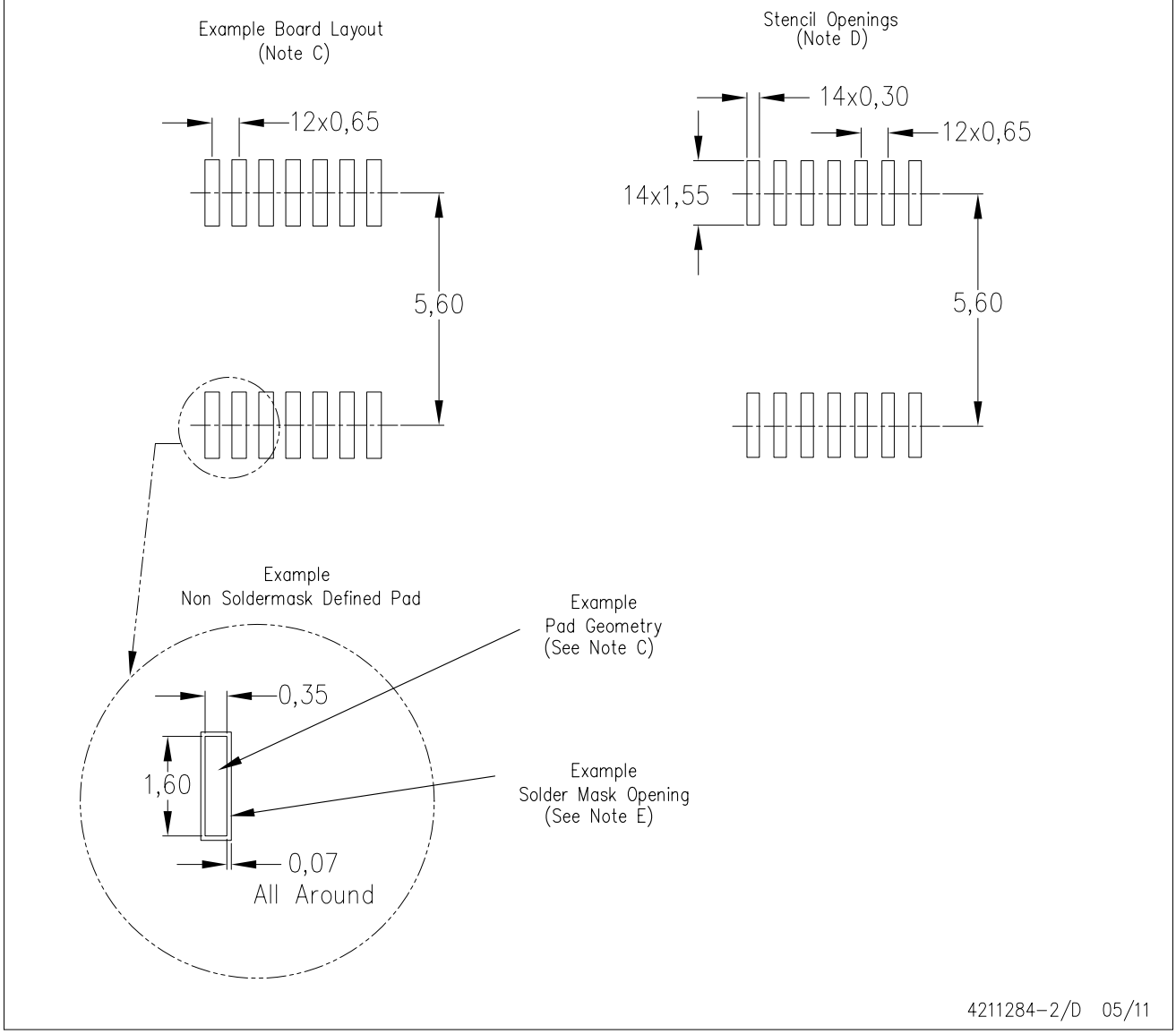

NOTES:
A. All linear dimensions are in millimeters.
B. This drawing is subject to change without notice.
C. Publication IPC–7351 is recommended for alternate designs.
D. Laser cutting apertures with trapezoidal walls and also rounding corners will offer better paste release. Customers should contact their board assembly site for stencil design recommendations. Refer to IPC–7525 for other stencil recommendations.
E. Customers should contact their board fabrication site for solder mask tolerances between and around signal pads.

D (R–PDSO–G8) PLASTIC SMALL OUTLINE

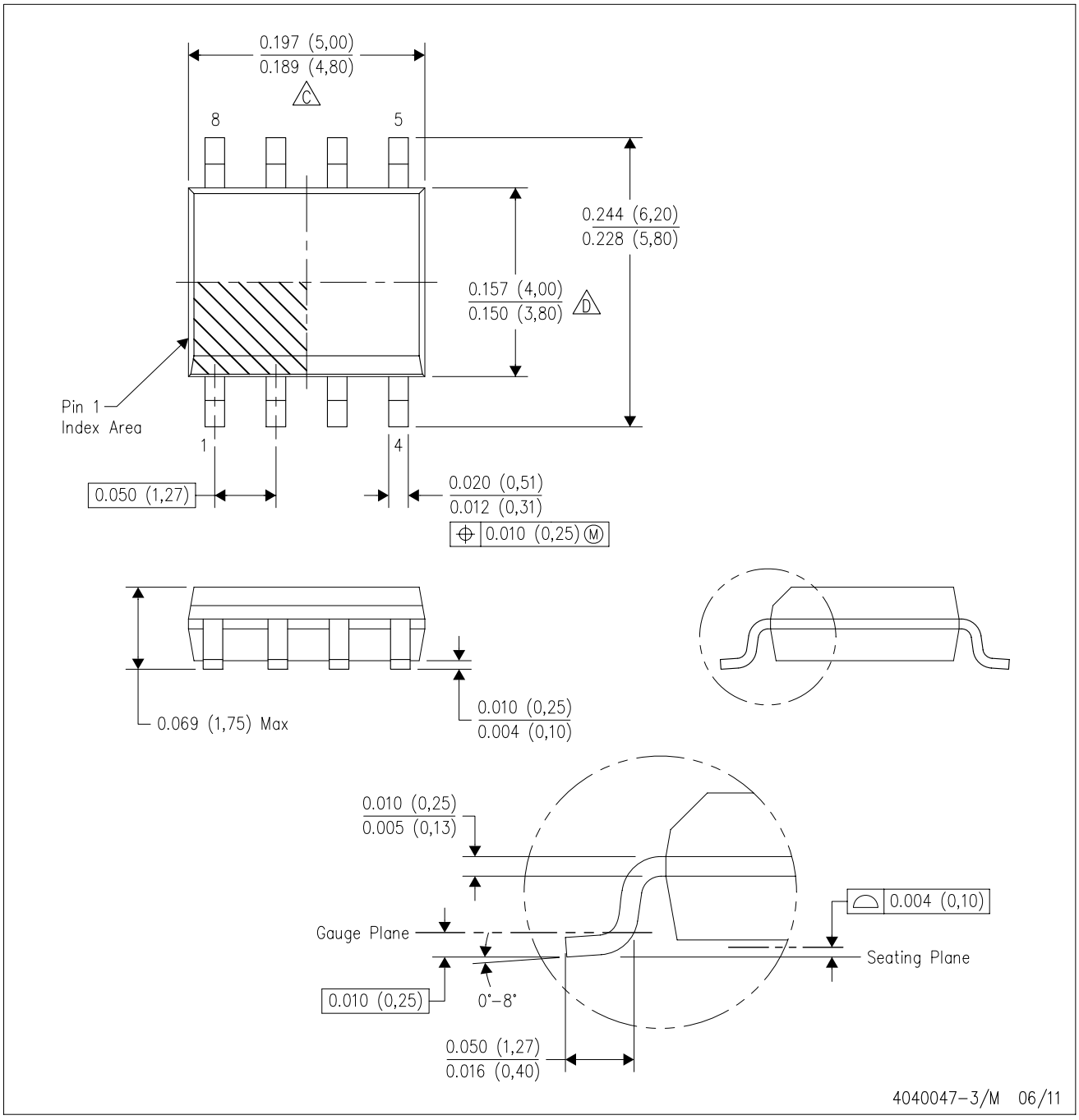

NOTES:
A. All linear dimensions are in inches (millimeters).
B. This drawing is subject to change without notice.
C. Body length does not include mold flash, protrusions, or gate burrs. Mold flash, protrusions, or gate burrs shall not exceed 0.006 (0,15) each side.
D. Body width does not include interlead flash. Interlead flash shall not exceed 0.017 (0,43) each side.
E. Reference JEDEC MS–012 variation AA.

IMPORTANT NOTICE

Texas Instruments Incorporated and its subsidiaries (TI) reserve the right to make corrections, modifications, enhancements, improvements, and other changes to its products and services at any time and to discontinue any product or service without notice. Customers should obtain the latest relevant information before placing orders and should verify that such information is current and complete. All products are sold subject to TI's terms and conditions of sale supplied at the time of order acknowledgment.

TI warrants performance of its hardware products to the specifications applicable at the time of sale in accordance with TI's standard warranty. Testing and other quality control techniques are used to the extent TI deems necessary to support this warranty. Except where mandated by government requirements, testing of all parameters of each product is not necessarily performed.

TI assumes no liability for applications assistance or customer product design. Customers are responsible for their products and applications using TI components. To minimize the risks associated with customer products and applications, customers should provide adequate design and operating safeguards.

TI does not warrant or represent that any license, either express or implied, is granted under any TI patent right, copyright, mask work right, or other TI intellectual property right relating to any combination, machine, or process in which TI products or services are used. Information published by TI regarding third-party products or services does not constitute a license from TI to use such products or services or a warranty or endorsement thereof. Use of such information may require a license from a third party under the patents or other intellectual property of the third party, or a license from TI under the patents or other intellectual property of TI.

Reproduction of TI information in TI data books or data sheets is permissible only if reproduction is without alteration and is accompanied by all associated warranties, conditions, limitations, and notices. Reproduction of this information with alteration is an unfair and deceptive business practice. TI is not responsible or liable for such altered documentation. Information of third parties may be subject to additional restrictions.

Resale of TI products or services with statements different from or beyond the parameters stated by TI for that product or service voids all express and any implied warranties for the associated TI product or service and is an unfair and deceptive business practice. TI is not responsible or liable for any such statements.

TI products are not authorized for use in safety-critical applications (such as life support) where a failure of the TI product would reasonably be expected to cause severe personal injury or death, unless officers of the parties have executed an agreement specifically governing such use. Buyers represent that they have all necessary expertise in the safety and regulatory ramifications of their applications, and acknowledge and agree that they are solely responsible for all legal, regulatory and safety-related requirements concerning their products and any use of TI products in such safety-critical applications, notwithstanding any applications-related information or support that may be provided by TI. Further, Buyers must fully indemnify TI and its representatives against any damages arising out of the use of TI products in such safety-critical applications.

TI products are neither designed nor intended for use in military/aerospace applications or environments unless the TI products are specifically designated by TI as military-grade or "enhanced plastic." Only products designated by TI as military-grade meet military specifications. Buyers acknowledge and agree that any such use of TI products which TI has not designated as military-grade is solely at the Buyer's risk, and that they are solely responsible for compliance with all legal and regulatory requirements in connection with such use.

TI products are neither designed nor intended for use in automotive applications or environments unless the specific TI products are designated by TI as compliant with ISO/TS 16949 requirements. Buyers acknowledge and agree that, if they use any non-designated products in automotive applications, TI will not be responsible for any failure to meet such requirements.

Following are URLs where you can obtain information on other Texas Instruments products and application solutions:

Products		**Applications**	
Audio	www.ti.com/audio	Communications and Telecom	www.ti.com/communications
Amplifiers	amplifier.ti.com	Computers and Peripherals	www.ti.com/computers
Data Converters	dataconverter.ti.com	Consumer Electronics	www.ti.com/consumer-apps
DLP® Products	www.dlp.com	Energy and Lighting	www.ti.com/energy
DSP	dsp.ti.com	Industrial	www.ti.com/industrial
Clocks and Timers	www.ti.com/clocks	Medical	www.ti.com/medical
Interface	interface.ti.com	Security	www.ti.com/security
Logic	logic.ti.com	Space, Avionics and Defense	www.ti.com/space-avionics-defense
Power Mgmt	power.ti.com	Transportation and Automotive	www.ti.com/automotive
Microcontrollers	microcontroller.ti.com	Video and Imaging	www.ti.com/video
RFID	www.ti-rfid.com	Wireless	www.ti.com/wireless-apps
RF/IF and ZigBee® Solutions	www.ti.com/lprf		
	TI E2E Community Home Page		e2e.ti.com

Mailing Address: Texas Instruments, Post Office Box 655303, Dallas, Texas 75265
Copyright © 2011, Texas Instruments Incorporated