OPA349
OPA2349



SBOS121B – JUNE 2000 – REVISED JANUARY 2004

1μA, Rail-to-Rail I/O CMOS OPERATIONAL AMPLIFIERS

FEATURES

- **LOW SUPPLY CURRENT: 1μA**
- **GAIN-BANDWIDTH: 70kHz**
- **UNITY-GAIN STABLE**
- **LOW INPUT BIAS CURRENT: 10pA (max)**
- **WIDE SUPPLY RANGE: 1.8V to 5.5V**
- **INPUT RANGE: 200mV Beyond Rails**
- **OUTPUT SWINGS TO 350mV OF RAILS**
- **OUTPUT DRIVE CURRENT: 8mA**
- **OPEN-LOOP GAIN: 90dB**
- ***Micro*PACKAGES: SC70, SOT23-5, SOT23-8**

APPLICATIONS

- **BATTERY PACKS AND POWER SUPPLIES**
- **PORTABLE PHONES, PAGERS, AND CAMERAS**
- **SOLAR-POWERED SYSTEMS**
- **SMOKE, GAS, AND FIRE DETECTION SYSTEMS**
- **REMOTE SENSORS**
- **PCMCIA CARDS**
- **DRIVING ANALOG-TO-DIGITAL (A/D) CONVERTERS**
- ***Micro*POWER FILTERS**

OPAx349 RELATED PRODUCTS

FEATURES	PRODUCT
1μA, 5.5kHz, Rail-To-Rail	TLV240x
1μA, 5.5kHz, Rail-To-Rail	TLV224x
7μA, 160kHz, Rail-To-Rail, 2.7V to 16V Supply	TLV238x
7μA, 160kHz, Rail-To-Rail, Micro Power	TLV27Lx
20μA, 500kHz, Rail-To-Rail, 1.8V Micro Power	TLV276x
20μA, 350kHz, Rail-To-Rail, Micro Power	OPAx347
45μA, 1MHz, Rail-To-Rail, 2.1V to 5.5V Supply	OPAx348

DESCRIPTION

The OPA349 and OPA2349 are ultra-low power operational amplifiers that provide 70kHz bandwidth with only 1μA quiescent current. These rail-to-rail input and output amplifiers are specifically designed for battery-powered applications. The input common-mode voltage range extends 200mV beyond the power-supply rails and the output swings to within 350mV of the rails, maintaining wide dynamic range. Unlike some micropower op amps, these parts are unity-gain stable and require no external compensation to achieve wide bandwidth. The OPA349 features a low input bias current that allows the use of large source and feedback resistors.

The OPA349 can be operated with power supplies from 1.8V to 5.5V with little change in performance, ensuring continuing superior performance even in low battery situations.

The OPA349 comes in miniature SOT23-5, SC70, and SO-8 surface-mount packages. The OPA2349 dual is available in SOT23-8, and SO-8 surface-mount packages. These tiny packages are ideal for use in high-density applications, such as PCMCIA cards, battery packs, and portable instruments.

The OPA349 is specified for 0°C to +70°C. The OPA2349 is specified for –40°C to +70°C.

OPEN-LOOP GAIN AND PHASE vs FREQUENCY

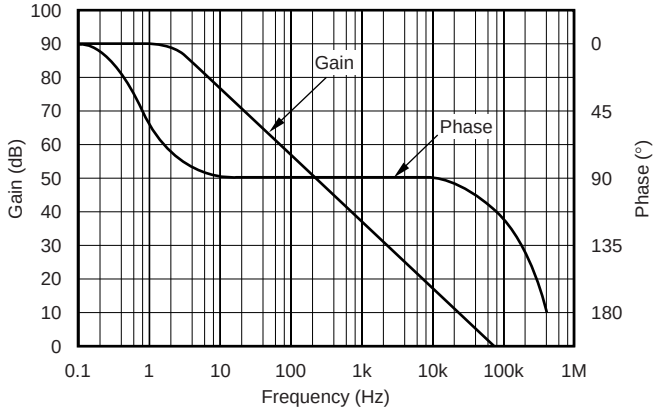

Please be aware that an important notice concerning availability, standard warranty, and use in critical applications of Texas Instruments semiconductor products and disclaimers thereto appears at the end of this data sheet.

All trademarks are the property of their respective owners.

PRODUCTION DATA information is current as of publication date. Products conform to specifications per the terms of Texas Instruments standard warranty. Production processing does not necessarily include testing of all parameters.

Copyright © 2000-2004, Texas Instruments Incorporated

ABSOLUTE MAXIMUM RATINGS[1]

Supply Voltage, V+ to V–	5.5V
Signal Input Terminals, Voltage[2]	(V–) – 0.5V to (V+) + 0.5V
Current[2]	10mA
Output Short Circuit[3]	Continuous
Operating Temperature, OPA2349	–55°C to +125°C
Operating Temperature, OPA349	0°C to +85°C
Storage Temperature	–65°C to +150°C
Junction Temperature	150°C
Lead Temperature (soldering, 3s)	300°C

NOTES: (1) Stresses above these ratings may cause permanent damage. Exposure to absolute maximum conditions for extended periods may degrade device reliability. These are stress ratings only, and functional operation of the device at these, or any other conditions beyond those specified, is not implied. (2) Input terminals are diode-clamped to the power-supply rails. Input signals that can swing more than 0.5V beyond the supply rails should be current-limited to 10mA or less. (3) Short-circuit to ground, one amplifier per package.

ELECTROSTATIC DISCHARGE SENSITIVITY

This integrated circuit can be damaged by ESD. Texas Instruments recommends that all integrated circuits be handled with appropriate precautions. Failure to observe proper handling and installation procedures can cause damage.

ESD damage can range from subtle performance degradation to complete device failure. Precision integrated circuits may be more susceptible to damage because very small parametric changes could cause the device not to meet its published specifications.

PACKAGE/ORDERING INFORMATION[1]

PRODUCT	PACKAGE	PACKAGE DESIGNATOR[1]	PACKAGE MARKING	ORDERING NUMBER	TRANSPORT MEDIA, QUANTITY
Single					
OPA349NA	SOT23-5	DBV	A49	OPA349NA/250	Tape and Reel, 250
"	"	"	"	OPA349NA/3K	Tape and Reel, 3000
OPA349UA	SO-8	D	OPA349UA	OPA349UA	Rails, 100
"	"	"	"	OPA349UA/2K5	Tape and Reel, 2500
OPA349SA	SC70-5	DCK	S49	OPA349SA/250	Tape and Reel, 250
"	"	"	"	OPA349SA/3K	Tape and Reel, 3000
Dual					
OPA2349EA	SOT23-8	DCN	C49	OPA2349EA/250	Tape and Reel, 250
"	"	"	"	OPA2349EA/3K	Tape and Reel, 3000
OPA2349UA	SO-8	D	OPA2349UA	OPA2349UA	Rails, 100
"	"	"	"	OPA2349UA/2K5	Tape and Reel, 2500

NOTE: (1) For the most current package and ordering information, see the Package Option Addendum located at the end of this data sheet.

PIN CONFIGURATIONS

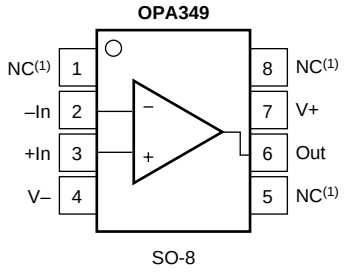

SO-8

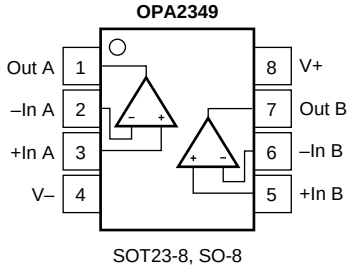

SOT23-8, SO-8

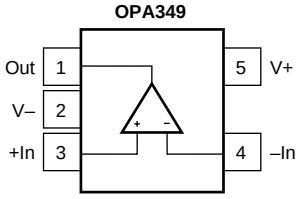

SOT23-5

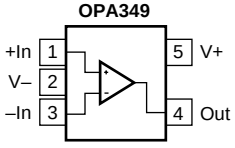

SC70-5

NOTE: (1) NC indicates no internal connection.

ELECTRICAL CHARACTERISTICS (Single): V_S = +1.8V to +5.5V

Boldface limits apply over the specified temperature range, **T_A = 0°C to +70°C.**

At T_A = +25°C, and R_L = 1MΩ connected to V_S/2, unless otherwise noted.

PARAMETER		CONDITION	OPA349 MIN	OPA349 TYP(1)	OPA349 MAX	UNITS
OFFSET VOLTAGE						
Input Offset Voltage	V_{OS}	V_S = 5V, V_{CM} = 2.5V		±2	±10	mV
Over Temperature				**±2**	**±13**	**mV**
Drift	**dV_{OS}/dT**			**±15**		**µV/°C**
vs Power-Supply Rejection Ratio	PSRR	V_S = 1.8V to 5.5V, V_{CM} = (V–) + 0.3V		350	1000	µV/V
Over Temperature					**3000**	**µV/V**
INPUT VOLTAGE RANGE						
Common-Mode Voltage Range	V_{CM}		(V–) – 0.2		(V+) + 0.2	V
Common-Mode Rejection Ratio	CMRR	V_S = +5V, –0.2V < V_{CM} < 5.2V	48	60		dB
Over Temperature			**46**			**dB**
		V_S = +5V, –0.2V < V_{CM} < 3.5V	52	72		dB
Over Temperature			**50**			**dB**
INPUT BIAS CURRENT						
Input Bias Current	I_B			±0.5	±10	pA
Input Offset Current	I_{OS}			±1	±10	pA
INPUT IMPEDANCE						
Differential				10^{13} || 2		Ω || pF
Common-Mode				10^{13} || 4		Ω || pF
NOISE						
Input Voltage Noise, f = 0.1Hz to 10Hz				8		µVp-p
Input Voltage Noise Density, f = 1kHz	e_n			300		nV/√Hz
Current Noise Density, f = 1kHz	i_n			4		fA/√Hz
OPEN-LOOP GAIN						
Open-Loop Voltage Gain	A_{OL}	R_L = 1MΩ, V_S = +5.5V, +0.3V < V_O < +5.2V	74	90		dB
Over Temperature			**72**			**dB**
Open-Loop Voltage Gain	A_{OL}	R_L = 10kΩ, V_S = +5.5V, +0.35V < V_O < +5.15V	74	90		dB
Over Temperature			**60**			**dB**
OUTPUT						
Voltage Output Swing from Rail		R_L = 1MΩ, V_S = +5.5V, A_{OL} > 74dB			300	mV
Over Temperature					**300**	**mV**
		R_L = 10kΩ, V_S = +5.5V, A_{OL} > 74dB			350	mV
Over Temperature					**350**	**mV**
Output Current				±8		mA
Short-Circuit Current	I_{SC}			±10		mA
Capacitive Load Drive	C_{LOAD}	See Typical Characteristics				
FREQUENCY RESPONSE		C_L = 10pF				
Gain-Bandwidth Product	GBW	G = +1		70		kHz
Slew Rate	SR	V_S = +5V, G = +1		0.02		V/µs
Settling Time, 0.1%	t_S	V_S = 5V, 1V Step		65		µs
0.01%		V_S = 5V, 1V Step		80		µs
Overload Recovery Time		V_{IN} • Gain = V_S		5		µs
POWER SUPPLY						
Specified Voltage Range	V_S		+1.8		+5.5	V
Quiescent Current (per amplifier)	I_Q	I_O = 0		1	2	µA
Over Temperature					**10**	**µA**
TEMPERATURE RANGE						
Specified Range			0		+70	°C
Operating Range			0		+85	°C
Storage Range			–65		+150	°C
Thermal Resistance	θ_{JA}					
SOT23-5 Surface-Mount				200		°C/W
SO-8 Surface-Mount				150		°C/W
SC70-5 Surface-Mount				250		°C/W

NOTE: (1) Refer to Typical Characteristic curves.

ELECTRICAL CHARACTERISTICS (Dual): V_S = +1.8V to +5.5V

Boldface limits apply over the specified temperature range, T_A = –40°C to +70°C.

At T_A = +25°C, and R_L = 1MΩ connected to V_S/2, unless otherwise noted.

PARAMETER		CONDITION	OPA2349 MIN	OPA2349 TYP(1)	OPA2349 MAX	UNITS
OFFSET VOLTAGE						
Input Offset Voltage	V_{OS}	V_S = 5V, V_{CM} = 2.5V		±2	±10	mV
Over Temperature				**±2**	**±13**	**mV**
Drift	**dV_{OS}/dT**			**±15**		**µV/°C**
vs Power Supply	PSRR	V_S = 1.8V to 5.5V, V_{CM} = (V–) + 0.3V		350	1000	µV/V
Over Temperature					**3000**	**µV/V**
Channel Separation, dc		R_L = 100kΩ		10		µV/V
		f = 1kHz		66(1)		dB
INPUT VOLTAGE RANGE						
Common-Mode Voltage Range	V_{CM}		(V–) – 0.2		(V+) + 0.2	V
Common-Mode Rejection Ratio	CMRR	V_S = +5V, –0.2V < V_{CM} < 5.2V	48	60		dB
Over Temperature			**46**			**dB**
		V_S = +5V, –0.2V < V_{CM} < 3.5V	52	72		dB
Over Temperature			**50**			**dB**
INPUT BIAS CURRENT						
Input Bias Current	I_B			±0.5	±10	pA
Input Offset Current	I_{OS}			±1	±10	pA
INPUT IMPEDANCE						
Differential				10^{13} || 2		Ω || pF
Common-Mode				10^{13} || 4		Ω || pF
NOISE						
Input Voltage Noise, f = 0.1Hz to 10Hz				8		µVp-p
Input Voltage Noise Density, f = 1kHz	e_n			300		$nV/\sqrt{Hz}$
Current Noise Density, f = 1kHz	i_n			4		$fA/\sqrt{Hz}$
OPEN-LOOP GAIN						
Open-Loop Voltage Gain	A_{OL}	R_L = 1MΩ, V_S = +5.5V, +0.3V < V_O < +5.2V	74	90		dB
Over Temperature			**72**			**dB**
Open-Loop Voltage Gain	A_{OL}	R_L = 10kΩ, V_S = +5.5V, +0.35V < V_O < +5.15V	74	90		dB
Over Temperature			**60**			**dB**
OUTPUT						
Voltage Output Swing from Rail		R_L = 1MΩ, V_S = +5.5V, A_{OL} > 74dB		150	300	mV
Over Temperature					**300**	**mV**
		R_L = 10kΩ, V_S = +5.5V, A_{OL} > 74dB		200	350	mV
Over Temperature					**350**	**mV**
Output Current				±8		mA
Short-Circuit Current	I_{SC}			±10		mA
FREQUENCY RESPONSE		C_L = 10pF				
Gain-Bandwidth Product	GBW	G = +1		70		kHz
Slew Rate	SR	V_S = +5V, G = +1		0.02		V/µs
Settling Time, 0.1%	t_S	V_S = 5V, 1V Step		65		µs
0.01%		V_S = 5V, 1V Step		80		µs
Overload Recovery Time		V_{IN} • Gain = V_S		5		µs
POWER SUPPLY						
Specified Voltage Range	V_S		+1.8		+5.5	V
Quiescent Current (per amplifier)	I_Q	I_O = 0		1	2	µA
Over Temperature					**10**	**µA**
TEMPERATURE RANGE						
Specified Range			–40		+70	°C
Operating Range			–40		+85	°C
Storage Range			–65		+150	°C
Thermal Resistance	θ_{JA}					
SOT23-8 Surface-Mount				200		°C/W
SO-8 Surface-Mount				150		°C/W

NOTE: (1) Refer to Typical Characteristic curves.

TYPICAL CHARACTERISTICS

At T_A = +25°C, V_S = +5V, and R_L = 1MΩ connected to V_S/2, unless otherwise noted.

OPEN-LOOP GAIN AND PHASE vs FREQUENCY

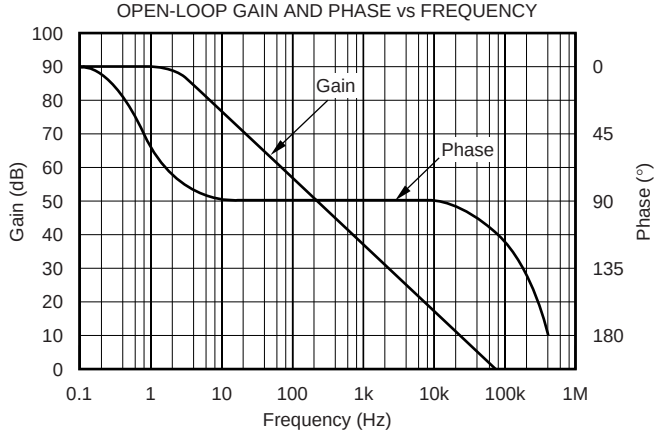

OPEN-LOOP GAIN vs TEMPERATURE

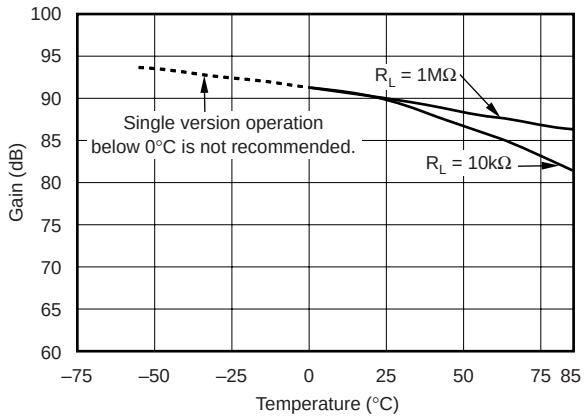

COMMON-MODE REJECTION RATIO vs FREQUENCY

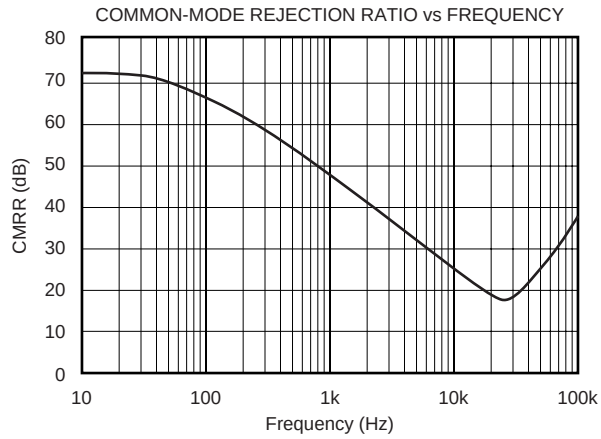

COMMON-MODE REJECTION RATIO
vs TEMPERATURE

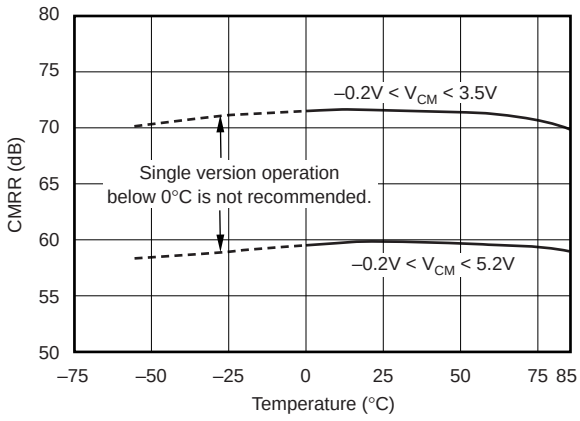

POWER-SUPPLY REJECTION RATIO vs FREQUENCY

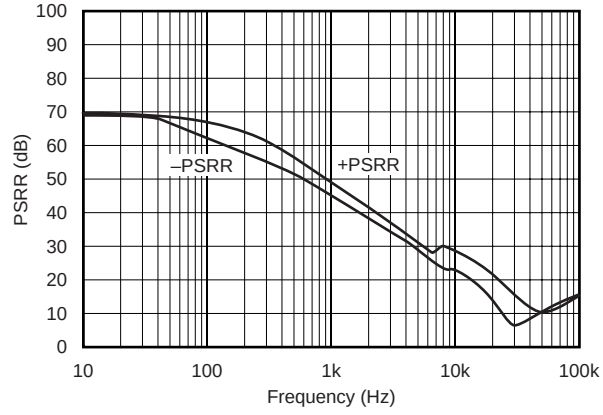

POWER-SUPPLY REJECTION RATIO
vs TEMPERATURE

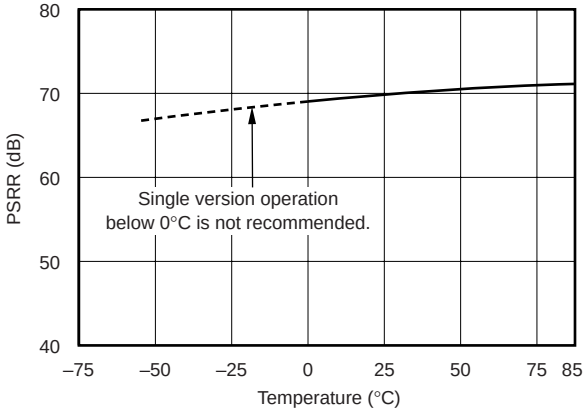

TYPICAL CHARACTERISTICS (Cont.)

At T_A = +25°C, V_S = +5V, and R_L = 1MΩ connected to V_S/2, unless otherwise noted.

QUIESCENT CURRENT vs TEMPERATURE

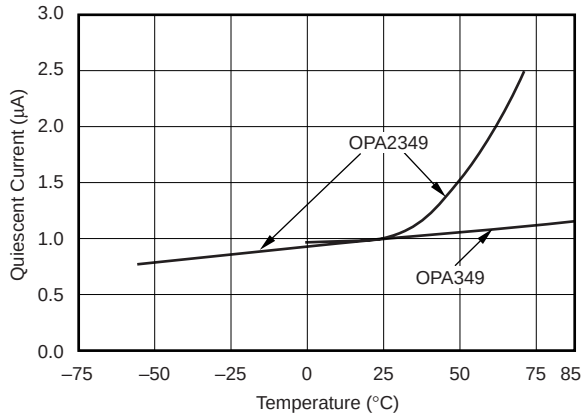

QUIESCENT AND SHORT-CIRCUIT vs SUPPLY VOLTAGE

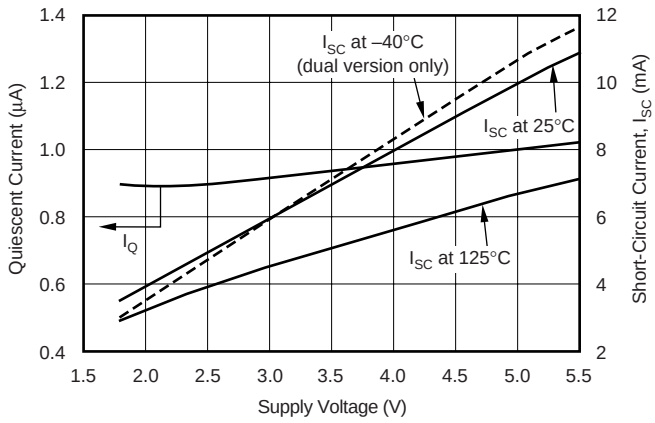

SHORT-CIRCUIT CURRENT vs TEMPERATURE

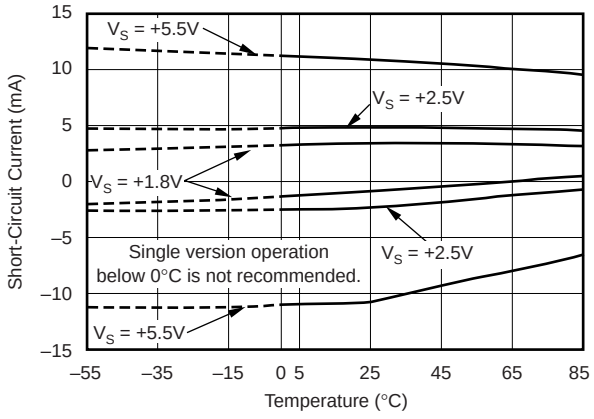

INPUT BIAS CURRENT vs TEMPERATURE

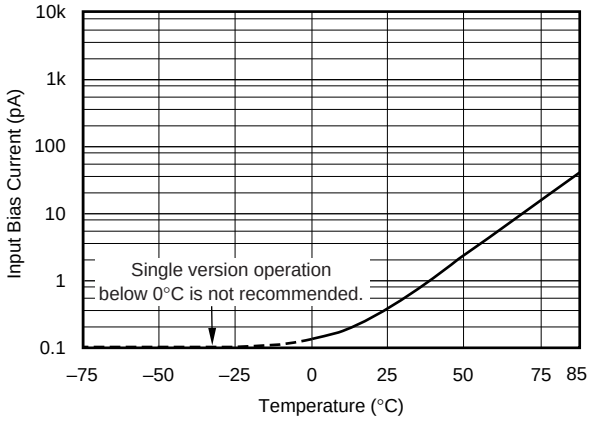

INPUT VOLTAGE NOISE DENSITY

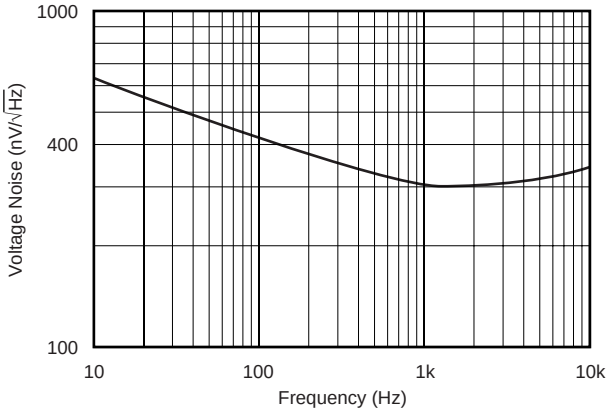

CHANNEL SEPARATION vs FREQUENCY

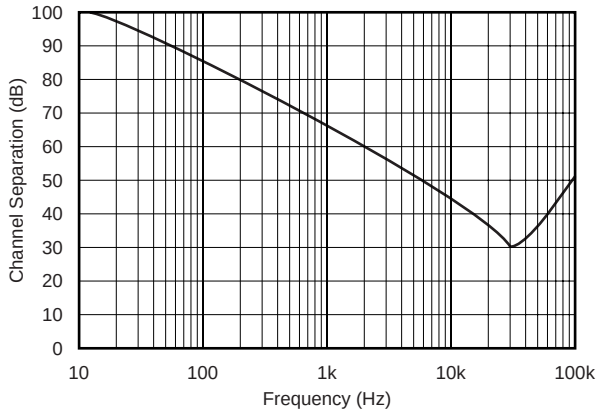

TYPICAL CHARACTERISTICS (Cont.)

At T_A = +25°C, V_S = +5V, and R_L = 1MΩ connected to V_S/2, unless otherwise noted.

OFFSET VOLTAGE DRIFT
PRODUCTION DISTRIBUTION

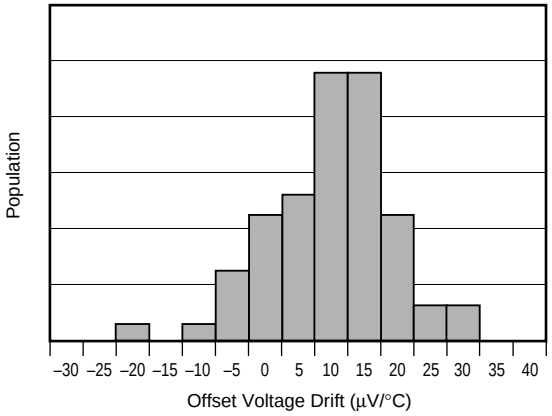

OUTPUT VOLTAGE vs OUTPUT CURRENT

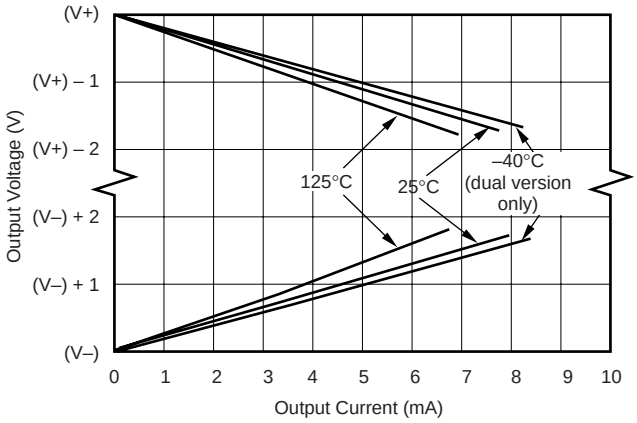

MAXIMUM OUTPUT VOLTAGE vs FREQUENCY

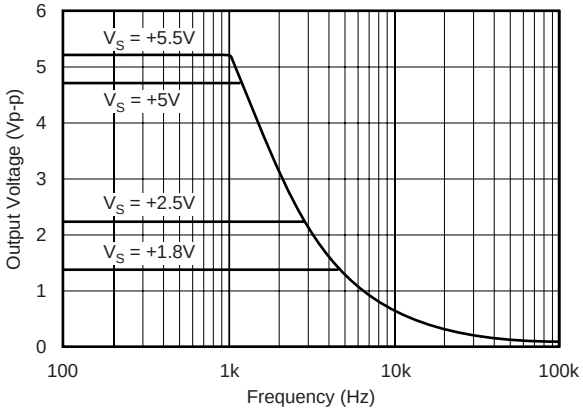

LARGE-SIGNAL STEP RESPONSE
G = 1, R_L = 1MΩ

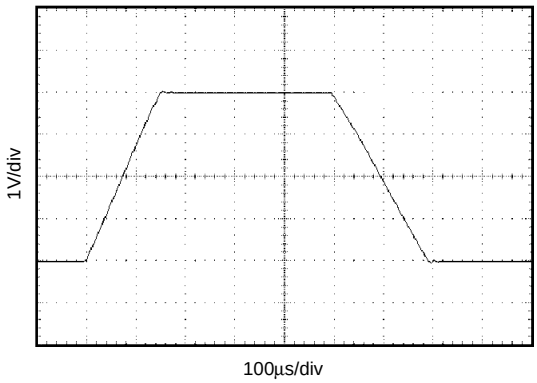

SMALL-SIGNAL STEP RESPONSE
G = 1, R_L = 1MΩ, C_L = 20pF

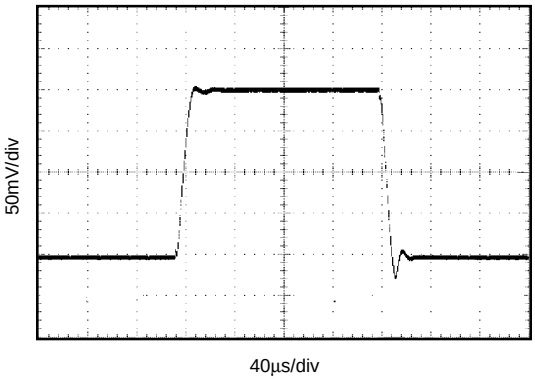

SMALL-SIGNAL STEP RESPONSE
G = 1, R_L = 1MΩ, C_L = 500pF

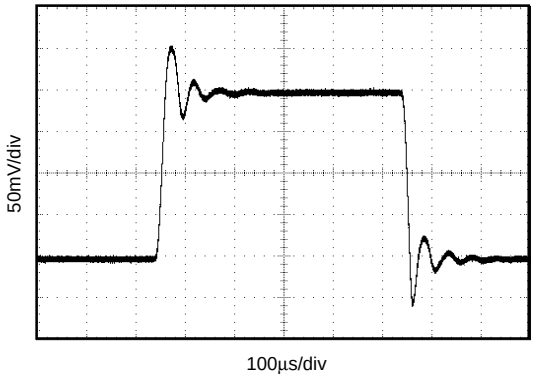

TYPICAL CHARACTERISTICS (Cont.)

At T_A = +25°C, V_S = +5V, and R_L = 1MΩ connected to V_S/2, unless otherwise noted.

SMALL-SIGNAL OVERSHOOT vs LOAD CAPACITANCE
(SC70)

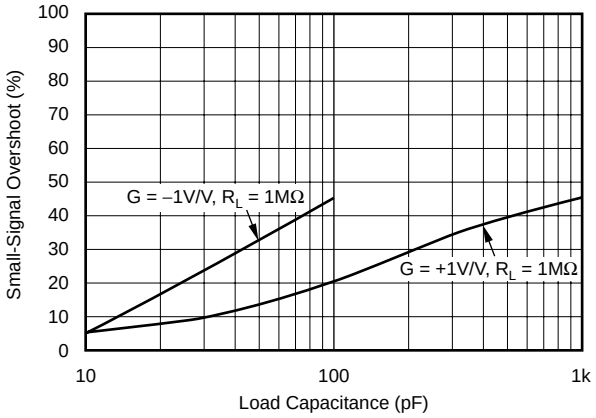

SMALL-SIGNAL OVERSHOOT vs LOAD CAPACITANCE
(SOT23, SO-8)

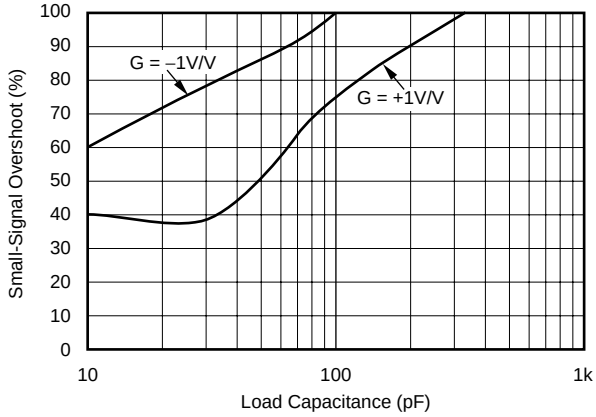

APPLICATIONS INFORMATION

The OPA349 series op amps are unity-gain stable and can operate on a single supply, making them highly versatile and easy to use. Power-supply pins should be bypassed with 0.01µF ceramic capacitors.

The OPA349 series op amps are fully specified and tested from +1.8V to +5.5V. Parameters that vary significantly with operating voltages or temperature are shown in the Typical Characteristic curves.

The ultra-low quiescent current of the OPA349 requires careful application circuit techniques to achieve low overall current consumption. Figure 1 shows an ac-coupled amplifier biased with a voltage divider. Resistor values must be very large to minimize current. The large feedback resistor value reacts with input capacitance and stray capacitance to produce a pole in the feedback network. A feedback capacitor may be required to assure stability and limit overshoot or gain peaking. Check circuit performance carefully to assure that biasing and feedback techniques meet signal and quiescent current requirements.

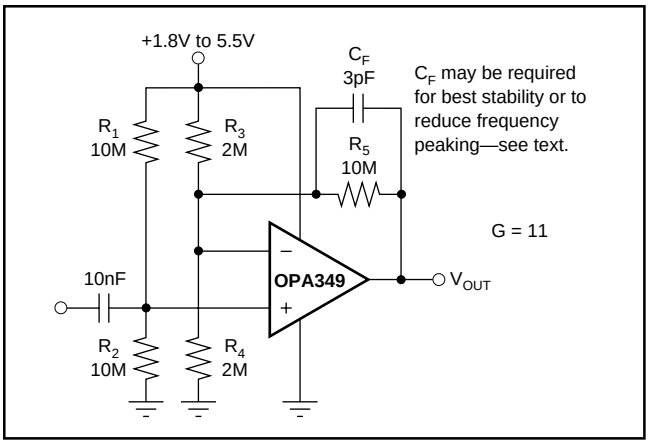

FIGURE 1. AC-Coupled Amplifier.

RAIL-TO-RAIL INPUT

The input common-mode voltage range of the OPA349 series extends 200mV beyond the supply rails. This is achieved with a complementary input stage—an N-channel input differential pair in parallel with a P-channel differential pair (as shown in Figure 2). The N-channel pair is active for input voltages close to the positive rail, typically (V+) – 1.3V to 200mV above the positive supply, while the P-channel pair is on for inputs from 200mV below the negative supply to approximately (V+) – 1.3V. There is a small transition region, typically (V+) – 1.5V to (V+) – 1.1V, in which both pairs are on. This 400mV transition region can vary 300mV with process variation. Thus, the transition region (both stages on) can range from (V+) – 1.8V to (V+) – 1.4V on the low end, up to (V+) – 1.2V to (V+) – 0.8V on the high end. Within the 400mV transition region PSRR, CMRR, offset voltage, offset drift, and THD may be degraded compared to operation outside this region. For more information on designing with rail-to-rail input op amps, see Figure 3, *Design Optimization with Rail-to-Rail Input Op Amps*.

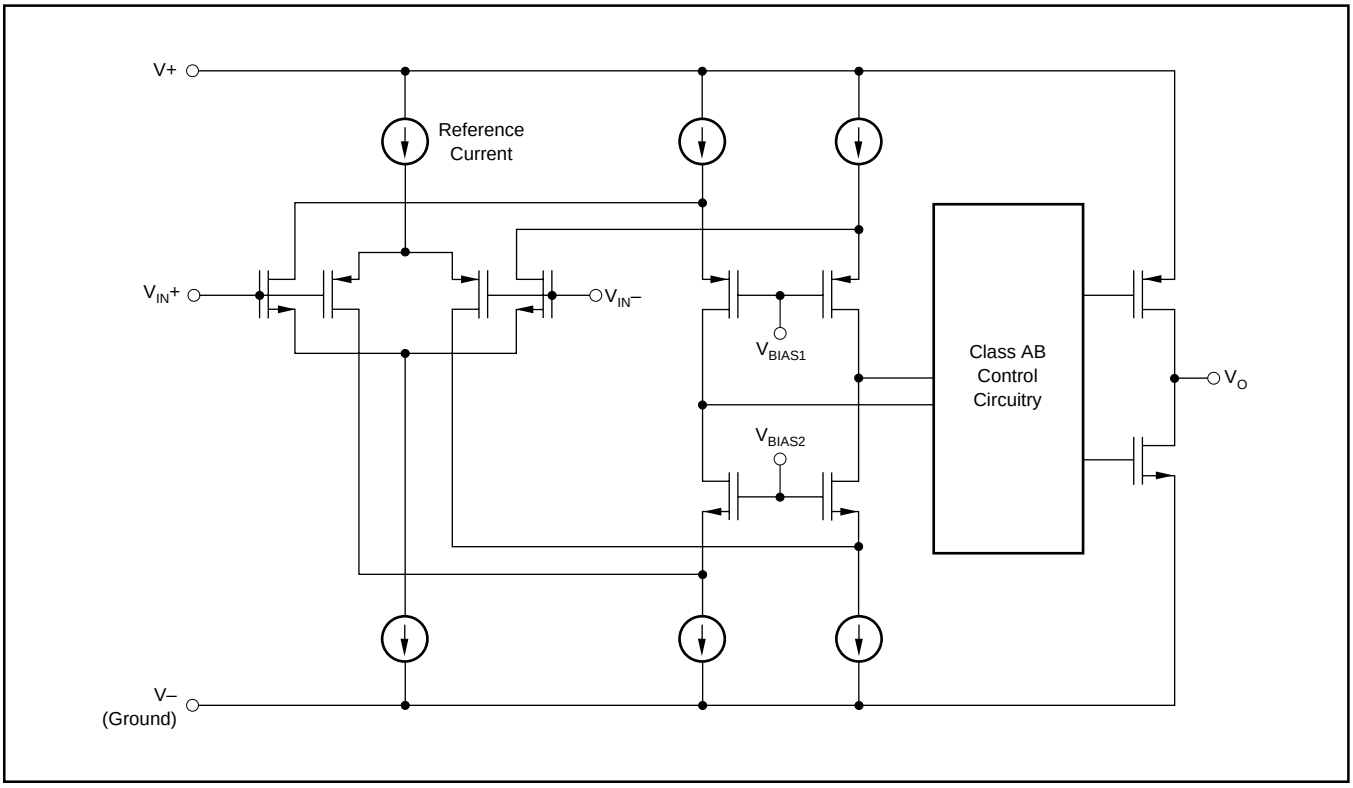

FIGURE 2. Simplified Schematic.

DESIGN OPTIMIZATION WITH RAIL-TO-RAIL INPUT OP AMPS

In most applications, operation is within the range of only one differential pair. However, some applications can subject the amplifier to a common-mode signal in the transition region. Under this condition, the inherent mismatch between the two differential pairs may lead to degradation of the CMRR and THD. The unity-gain buffer configuration is the most problematic—it will traverse through the transition region if a sufficiently wide input swing is required. A design option would be to configure the op amp as a unity-gain inverter as shown below and hold the noninverting input at a set common-mode voltage outside the transition region. This can be accomplished with a voltage divider from the supply. The voltage divider should be designed such that the biasing point for the noninverting input is outside the transition region.

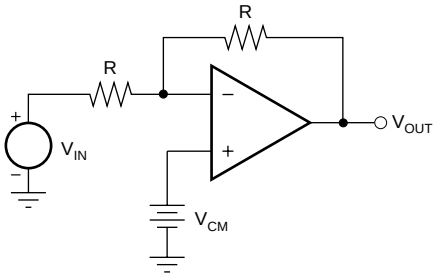

FIGURE 3. Design Optimization.

COMMON-MODE REJECTION

The CMRR for the OPA349 is specified in two ways so the best match for a given application may be used. First, the CMRR of the device in the common-mode range below the transition region (V_{CM} < (V+) – 1.5V) is given. This specification is the best indicator of the capability of the device when the application requires use of one of the differential input pairs. Second, the CMRR at V_S = 5V over the entire common-mode range is specified.

OUTPUT DRIVEN TO V– RAIL

Loads that connect to single-supply ground (or the V– supply pin) can cause the OPA349 or OPA2349 to oscillate if the output voltage is driven into the negative rail (as shown in Figure 4a). Similarly, loads that can cause current to flow out of the output pin when the output voltage is near V– can cause oscillations. The op amp will recover to normal operation a few microseconds after the output is driven positively out of the rail.

Some op amp applications can produce this condition even without a load connected to V–. The integrator in Figure 4b shows an example of this effect. Assume that the output ramps negatively, and saturates near 0V. Any negative-going step at V_{IN} will produce a positive output current pulse through R_1 and C_1. This may incite the oscillation. Diode D_1 prevents the input step from pulling output current when the output is saturated at the rail, thus preventing the oscillation.

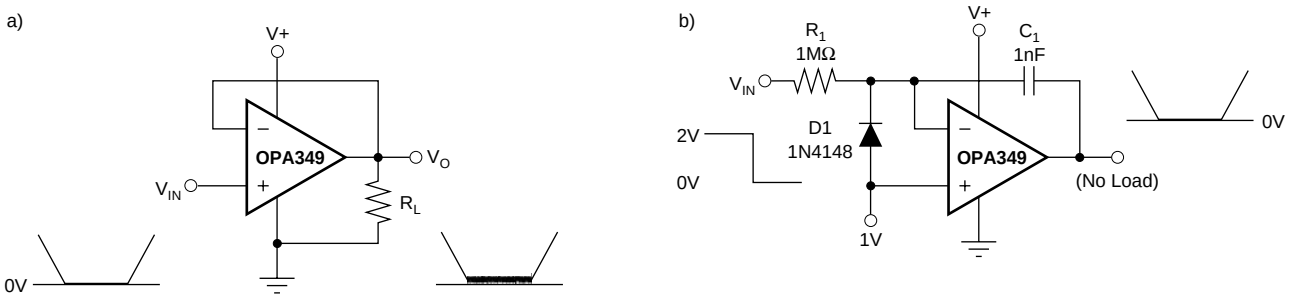

FIGURE 4. Output Driven to Negative Rail.

PACKAGING INFORMATION

Orderable Device	Status (1)	Package Type	Package Drawing	Pins	Package Qty	Eco Plan (2)	Lead/Ball Finish	MSL Peak Temp (3)	Op Temp (°C)	Top-Side Markings (4)	Samples
OPA2349EA/250	ACTIVE	SOT-23	DCN	8	250	Green (RoHS & no Sb/Br)	CU NIPDAU	Level-2-260C-1 YEAR		C49	Samples
OPA2349EA/3K	ACTIVE	SOT-23	DCN	8	3000	Green (RoHS & no Sb/Br)	CU NIPDAU	Level-2-260C-1 YEAR		C49	Samples
OPA2349UA	ACTIVE	SOIC	D	8	75	Green (RoHS & no Sb/Br)	CU NIPDAU	Level-2-260C-1 YEAR		OPA 2349UA	Samples
OPA2349UA/2K5	ACTIVE	SOIC	D	8	2500	Green (RoHS & no Sb/Br)	CU NIPDAU	Level-2-260C-1 YEAR		OPA 2349UA	Samples
OPA2349UA/2K5G4	ACTIVE	SOIC	D	8	2500	Green (RoHS & no Sb/Br)	CU NIPDAU	Level-2-260C-1 YEAR		OPA 2349UA	Samples
OPA2349UAG4	ACTIVE	SOIC	D	8	75	Green (RoHS & no Sb/Br)	CU NIPDAU	Level-2-260C-1 YEAR		OPA 2349UA	Samples
OPA349NA/250	ACTIVE	SOT-23	DBV	5	250	Green (RoHS & no Sb/Br)	CU NIPDAU	Level-2-260C-1 YEAR		A49	Samples
OPA349NA/250G4	ACTIVE	SOT-23	DBV	5	250	Green (RoHS & no Sb/Br)	CU NIPDAU	Level-2-260C-1 YEAR		A49	Samples
OPA349NA/3K	ACTIVE	SOT-23	DBV	5	3000	Green (RoHS & no Sb/Br)	CU NIPDAU	Level-2-260C-1 YEAR		A49	Samples
OPA349NA/3KG4	ACTIVE	SOT-23	DBV	5	3000	Green (RoHS & no Sb/Br)	CU NIPDAU	Level-2-260C-1 YEAR		A49	Samples
OPA349SA/250	ACTIVE	SC70	DCK	5	250	Green (RoHS & no Sb/Br)	CU NIPDAU	Level-1-260C-UNLIM		S49	Samples
OPA349SA/250G4	ACTIVE	SC70	DCK	5	250	Green (RoHS & no Sb/Br)	CU NIPDAU	Level-1-260C-UNLIM		S49	Samples
OPA349SA/3K	ACTIVE	SC70	DCK	5	3000	Green (RoHS & no Sb/Br)	CU NIPDAU	Level-1-260C-UNLIM		S49	Samples
OPA349SA/3KG4	ACTIVE	SC70	DCK	5	3000	Green (RoHS & no Sb/Br)	CU NIPDAU	Level-1-260C-UNLIM		S49	Samples
OPA349UA	ACTIVE	SOIC	D	8	75	Green (RoHS & no Sb/Br)	CU NIPDAU	Level-2-260C-1 YEAR		OPA 349UA	Samples
OPA349UA/2K5	ACTIVE	SOIC	D	8	2500	Green (RoHS & no Sb/Br)	CU NIPDAU	Level-2-260C-1 YEAR		OPA 349UA	Samples
OPA349UA/2K5G4	ACTIVE	SOIC	D	8	2500	Green (RoHS & no Sb/Br)	CU NIPDAU	Level-2-260C-1 YEAR		OPA 349UA	Samples

Orderable Device	Status (1)	Package Type	Package Drawing	Pins	Package Qty	Eco Plan (2)	Lead/Ball Finish	MSL Peak Temp (3)	Op Temp (°C)	Top-Side Markings (4)	Samples
OPA349UAG4	ACTIVE	SOIC	D	8	75	Green (RoHS & no Sb/Br)	CU NIPDAU	Level-2-260C-1 YEAR		OPA 349UA	Samples

(1) The marketing status values are defined as follows:
ACTIVE: Product device recommended for new designs.
LIFEBUY: TI has announced that the device will be discontinued, and a lifetime-buy period is in effect.
NRND: Not recommended for new designs. Device is in production to support existing customers, but TI does not recommend using this part in a new design.
PREVIEW: Device has been announced but is not in production. Samples may or may not be available.
OBSOLETE: TI has discontinued the production of the device.

(2) Eco Plan - The planned eco-friendly classification: Pb-Free (RoHS), Pb-Free (RoHS Exempt), or Green (RoHS & no Sb/Br) - please check http://www.ti.com/productcontent for the latest availability information and additional product content details.
TBD: The Pb-Free/Green conversion plan has not been defined.
Pb-Free (RoHS): TI's terms "Lead-Free" or "Pb-Free" mean semiconductor products that are compatible with the current RoHS requirements for all 6 substances, including the requirement that lead not exceed 0.1% by weight in homogeneous materials. Where designed to be soldered at high temperatures, TI Pb-Free products are suitable for use in specified lead-free processes.
Pb-Free (RoHS Exempt): This component has a RoHS exemption for either 1) lead-based flip-chip solder bumps used between the die and package, or 2) lead-based die adhesive used between the die and leadframe. The component is otherwise considered Pb-Free (RoHS compatible) as defined above.
Green (RoHS & no Sb/Br): TI defines "Green" to mean Pb-Free (RoHS compatible), and free of Bromine (Br) and Antimony (Sb) based flame retardants (Br or Sb do not exceed 0.1% by weight in homogeneous material)

(3) MSL, Peak Temp. -- The Moisture Sensitivity Level rating according to the JEDEC industry standard classifications, and peak solder temperature.

(4) Only one of markings shown within the brackets will appear on the physical device.

Important Information and Disclaimer: The information provided on this page represents TI's knowledge and belief as of the date that it is provided. TI bases its knowledge and belief on information provided by third parties, and makes no representation or warranty as to the accuracy of such information. Efforts are underway to better integrate information from third parties. TI has taken and continues to take reasonable steps to provide representative and accurate information but may not have conducted destructive testing or chemical analysis on incoming materials and chemicals. TI and TI suppliers consider certain information to be proprietary, and thus CAS numbers and other limited information may not be available for release.

In no event shall TI's liability arising out of such information exceed the total purchase price of the TI part(s) at issue in this document sold by TI to Customer on an annual basis.

TAPE AND REEL INFORMATION

REEL DIMENSIONS

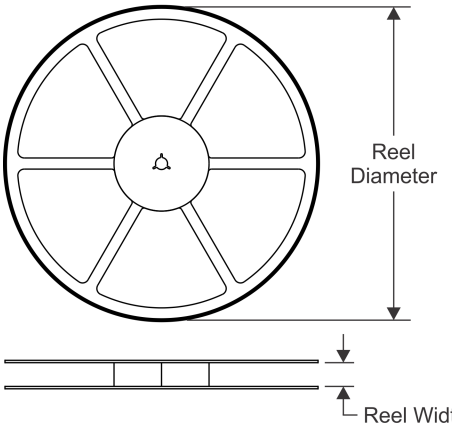

TAPE DIMENSIONS

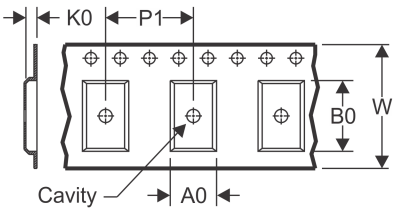

A0	Dimension designed to accommodate the component width
B0	Dimension designed to accommodate the component length
K0	Dimension designed to accommodate the component thickness
W	Overall width of the carrier tape
P1	Pitch between successive cavity centers

QUADRANT ASSIGNMENTS FOR PIN 1 ORIENTATION IN TAPE

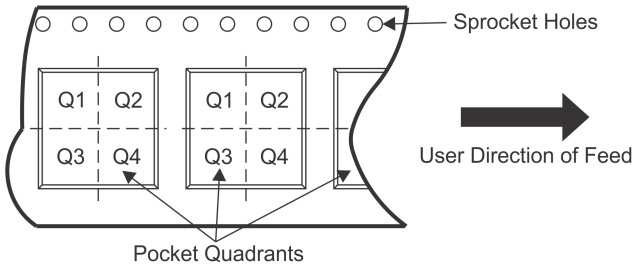

*All dimensions are nominal

Device	Package Type	Package Drawing	Pins	SPQ	Reel Diameter (mm)	Reel Width W1 (mm)	A0 (mm)	B0 (mm)	K0 (mm)	P1 (mm)	W (mm)	Pin1 Quadrant
OPA2349EA/250	SOT-23	DCN	8	250	180.0	8.4	3.2	3.1	1.39	4.0	8.0	Q3
OPA2349EA/3K	SOT-23	DCN	8	3000	180.0	8.4	3.2	3.1	1.39	4.0	8.0	Q3
OPA349SA/250	SC70	DCK	5	250	179.0	8.4	2.2	2.5	1.2	4.0	8.0	Q3
OPA349SA/3K	SC70	DCK	5	3000	179.0	8.4	2.2	2.5	1.2	4.0	8.0	Q3
OPA349UA/2K5	SOIC	D	8	2500	330.0	12.4	6.4	5.2	2.1	8.0	12.0	Q1

TAPE AND REEL BOX DIMENSIONS

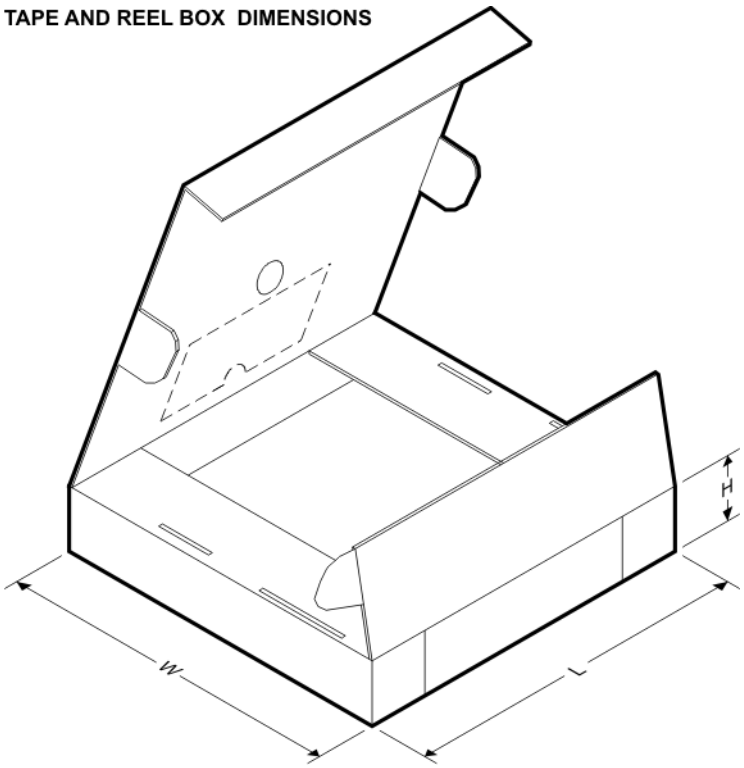

*All dimensions are nominal

Device	Package Type	Package Drawing	Pins	SPQ	Length (mm)	Width (mm)	Height (mm)
OPA2349EA/250	SOT-23	DCN	8	250	210.0	185.0	35.0
OPA2349EA/3K	SOT-23	DCN	8	3000	210.0	185.0	35.0
OPA349SA/250	SC70	DCK	5	250	203.0	203.0	35.0
OPA349SA/3K	SC70	DCK	5	3000	203.0	203.0	35.0
OPA349UA/2K5	SOIC	D	8	2500	367.0	367.0	35.0

DBV (R–PDSO–G5) PLASTIC SMALL–OUTLINE PACKAGE

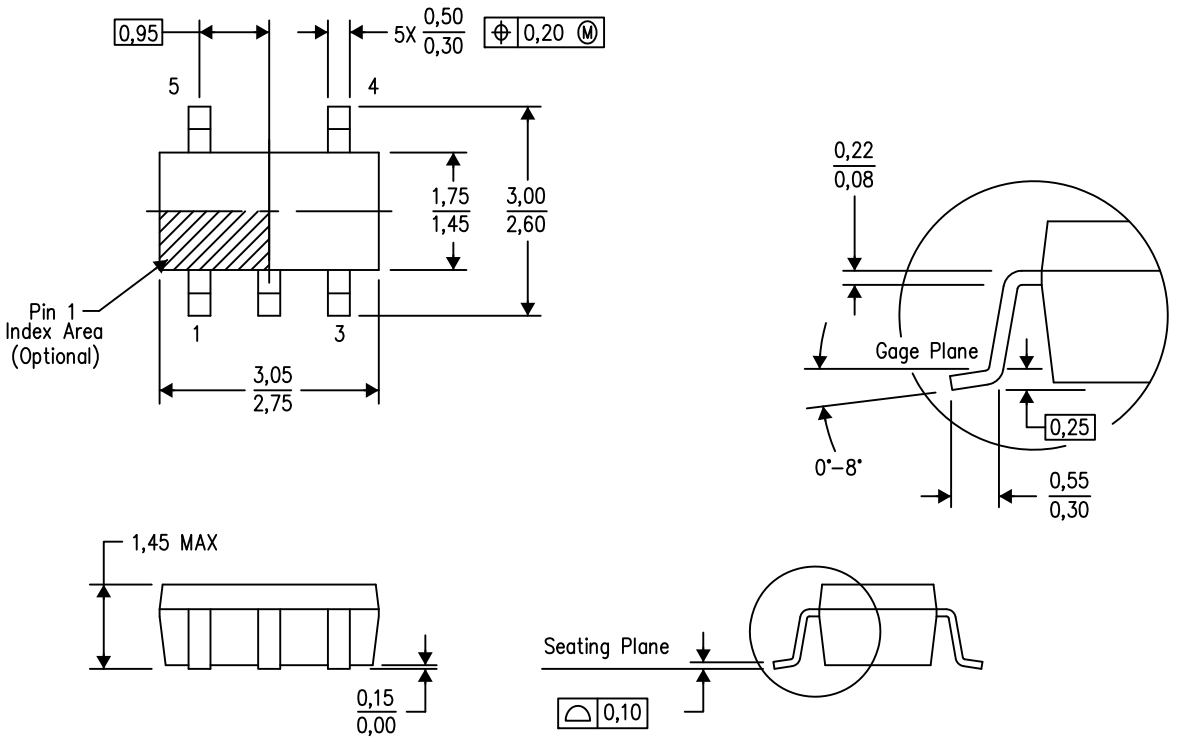

4073253–4/L 08/2013

NOTES:
A. All linear dimensions are in millimeters.
B. This drawing is subject to change without notice.
C. Body dimensions do not include mold flash or protrusion. Mold flash and protrusion shall not exceed 0.15 per side.
D. Falls within JEDEC MO–178 Variation AA.

DBV (R–PDSO–G5) PLASTIC SMALL OUTLINE

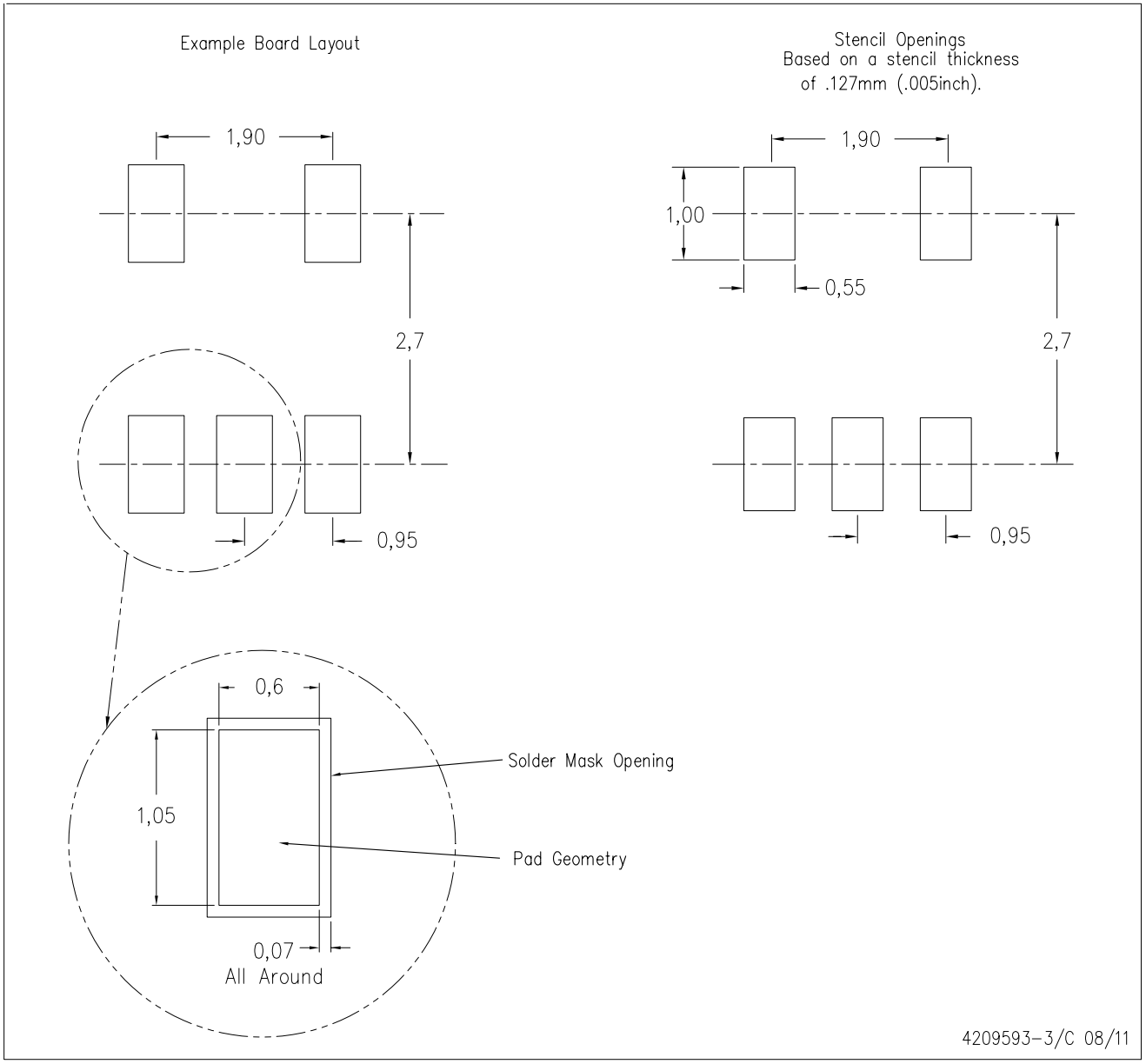

NOTES:
A. All linear dimensions are in millimeters.
B. This drawing is subject to change without notice.
C. Customers should place a note on the circuit board fabrication drawing not to alter the center solder mask defined pad.
D. Publication IPC–7351 is recommended for alternate designs.
E. Laser cutting apertures with trapezoidal walls and also rounding corners will offer better paste release. Customers should contact their board assembly site for stencil design recommendations. Example stencil design based on a 50% volumetric metal load solder paste. Refer to IPC–7525 for other stencil recommendations.

DCK (R–PDSO–G5) PLASTIC SMALL–OUTLINE PACKAGE

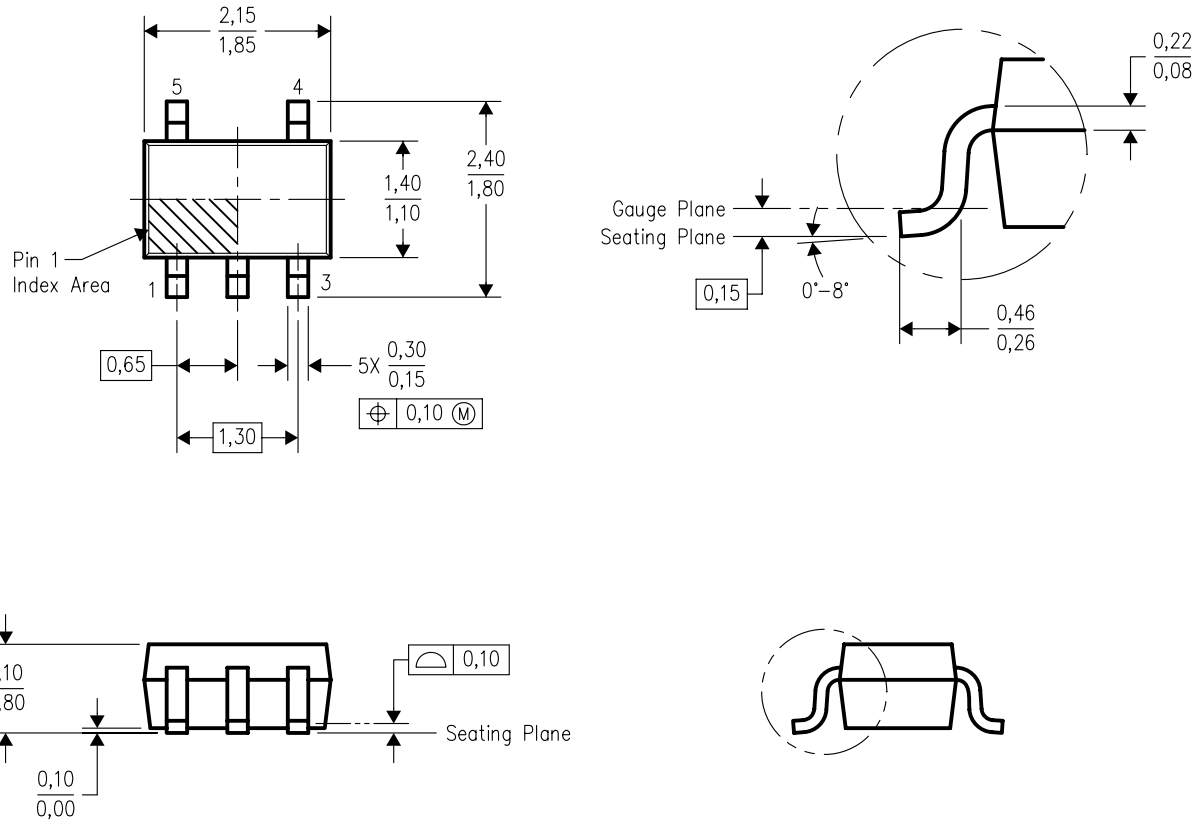

4093553–3/G 01/2007

NOTES:
A. All linear dimensions are in millimeters.
B. This drawing is subject to change without notice.
C. Body dimensions do not include mold flash or protrusion. Mold flash and protrusion shall not exceed 0.15 per side.
D. Falls within JEDEC MO–203 variation AA.

DCK (R–PDSO–G5) PLASTIC SMALL OUTLINE

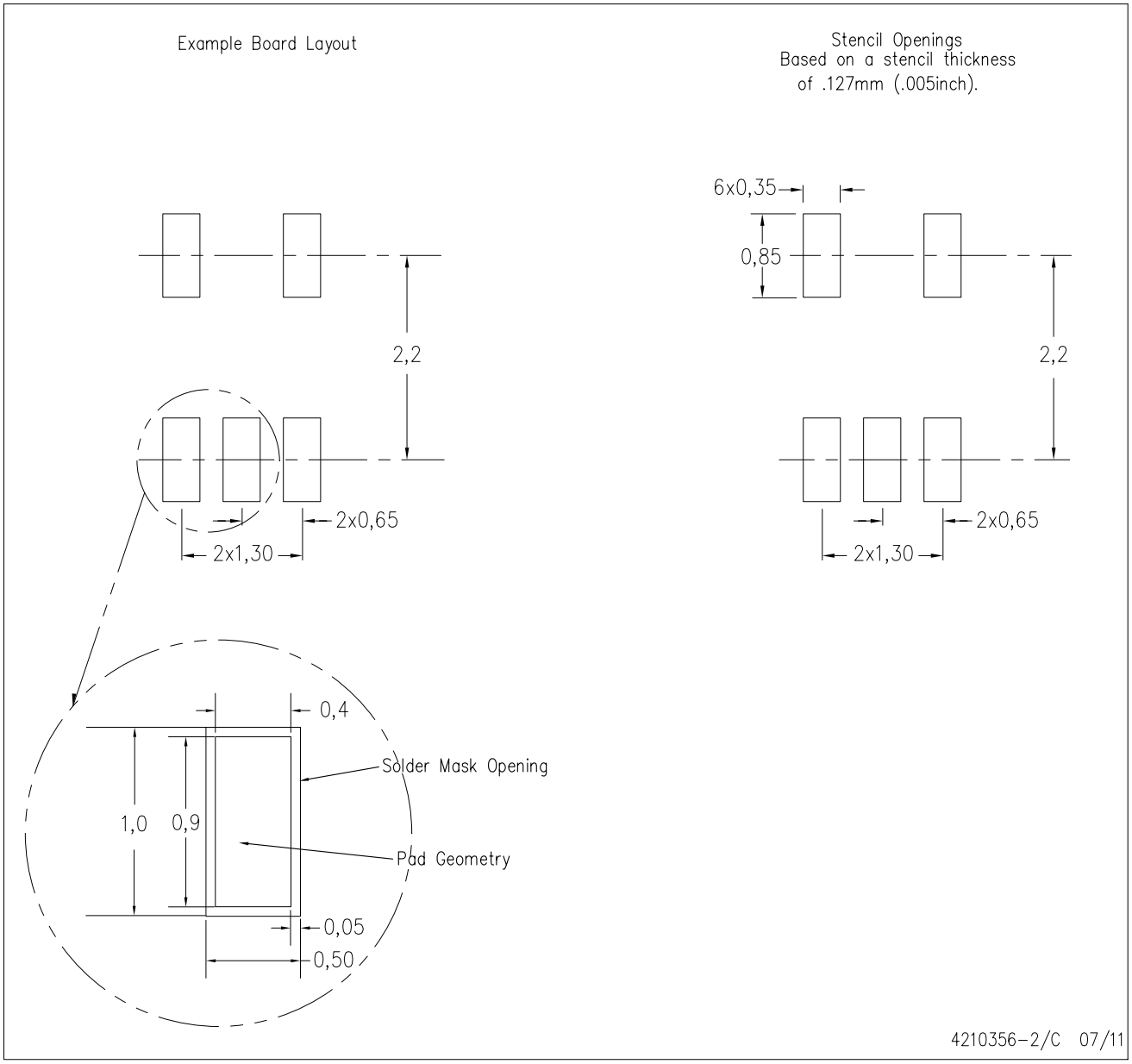

NOTES:
A. All linear dimensions are in millimeters.
B. This drawing is subject to change without notice.
C. Customers should place a note on the circuit board fabrication drawing not to alter the center solder mask defined pad.
D. Publication IPC–7351 is recommended for alternate designs.
E. Laser cutting apertures with trapezoidal walls and also rounding corners will offer better paste release. Customers should contact their board assembly site for stencil design recommendations. Example stencil design based on a 50% volumetric metal load solder paste. Refer to IPC–7525 for other stencil recommendations.

DCN (R–PDSO–G8) PLASTIC SMALL–OUTLINE PACKAGE (DIE DOWN)

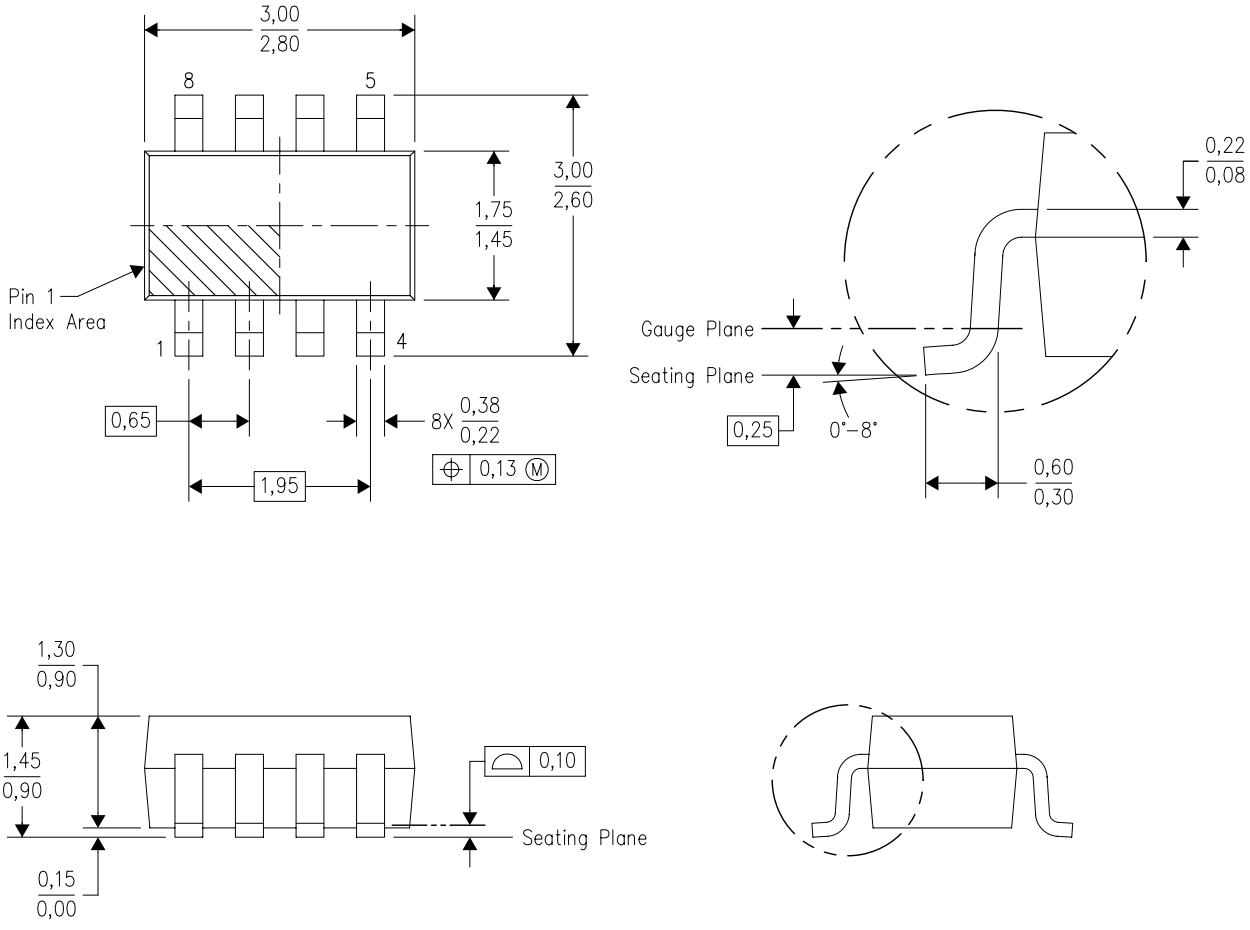

NOTES:
A. All linear dimensions are in millimeters.
B. This drawing is subject to change without notice.
C. Package outline exclusive of metal burr & dambar protrusion/intrusion.
D. Package outline inclusive of solder plating.
E. A visual index feature must be located within the Pin 1 index area.
F. Falls within JEDEC MO–178 Variation BA.
G. Body dimensions do not include flash or protrusion. Mold flash and protrusion shall not exceed 0.25 per side.

DCN (R–PDSO–G8) PLASTIC SMALL–OUTLINE PACKAGE (DIE DOWN)

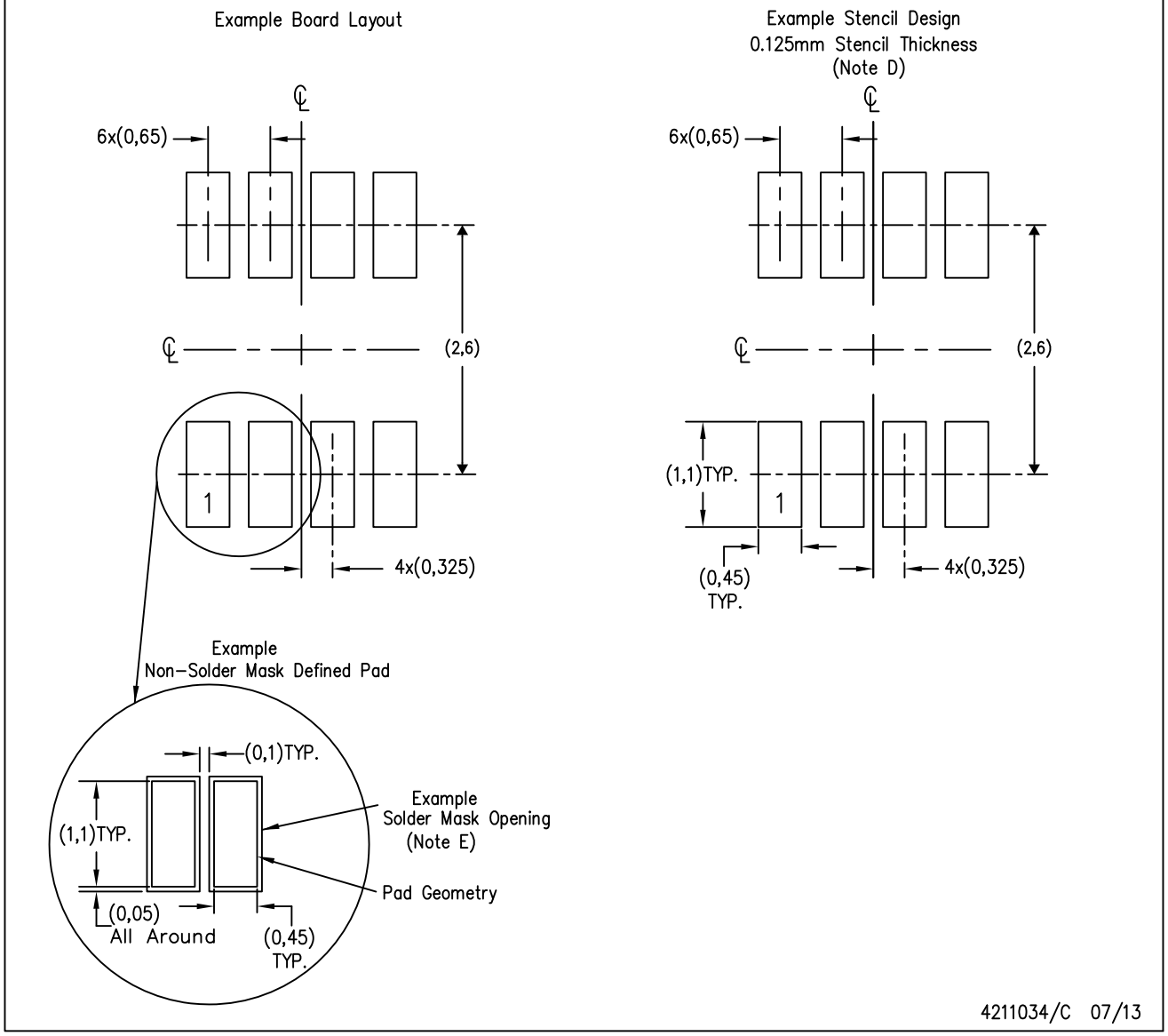

NOTES:
A. All linear dimensions are in millimeters.
B. This drawing is subject to change without notice.
C. Publication IPC–7351 is recommended for alternate designs.
D. Laser cutting apertures with trapezoidal walls and also rounding corners will offer better paste release. Customers should contact their board assembly site for stencil design recommendations. Refer to IPC–7525.
E. Customers should contact their board fabrication site for solder mask tolerances between and around signal pads.

D (R–PDSO–G8) PLASTIC SMALL OUTLINE

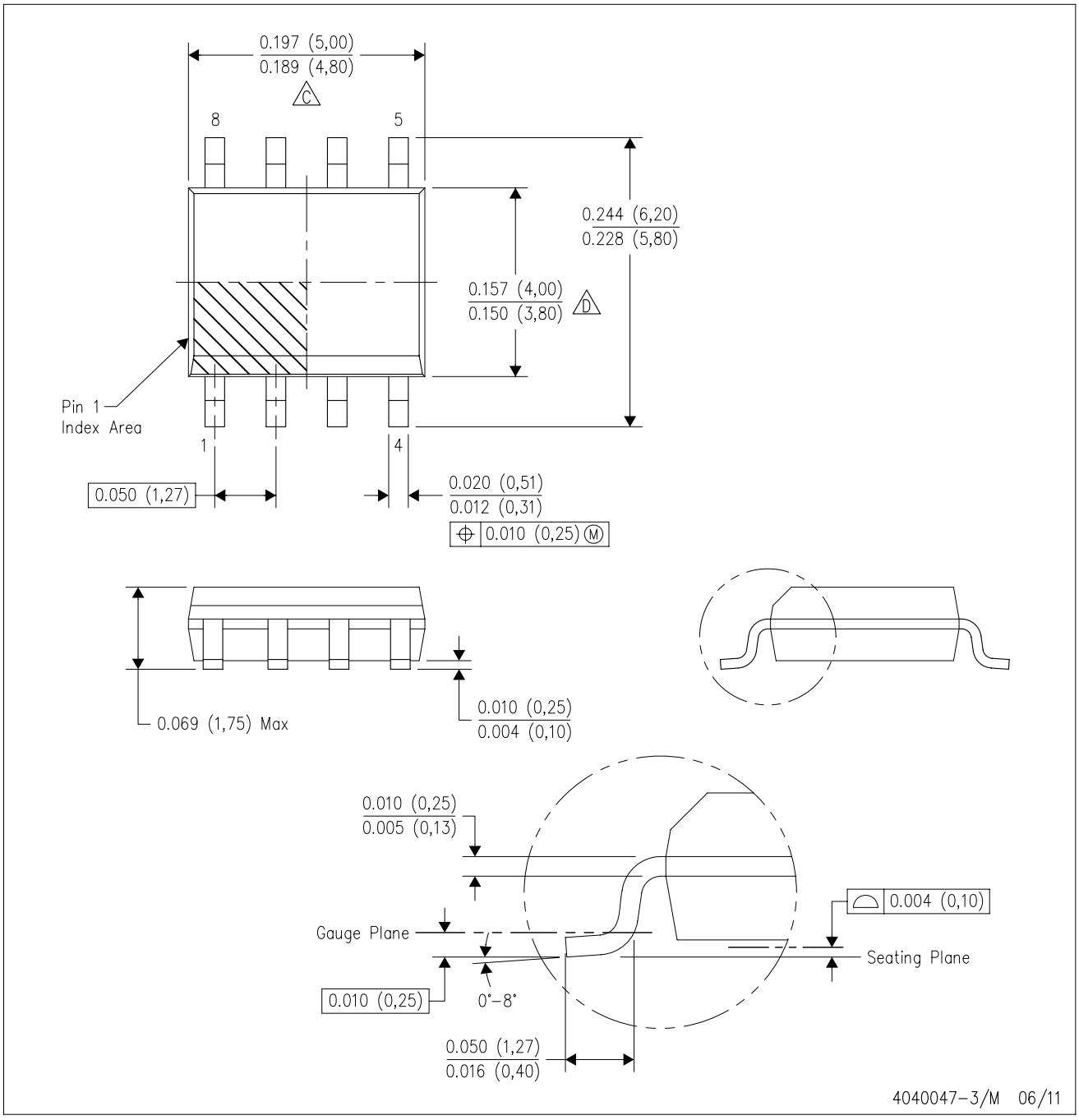

NOTES:
A. All linear dimensions are in inches (millimeters).
B. This drawing is subject to change without notice.
C. Body length does not include mold flash, protrusions, or gate burrs. Mold flash, protrusions, or gate burrs shall not exceed 0.006 (0,15) each side.
D. Body width does not include interlead flash. Interlead flash shall not exceed 0.017 (0,43) each side.
E. Reference JEDEC MS–012 variation AA.

D (R–PDSO–G8) PLASTIC SMALL OUTLINE

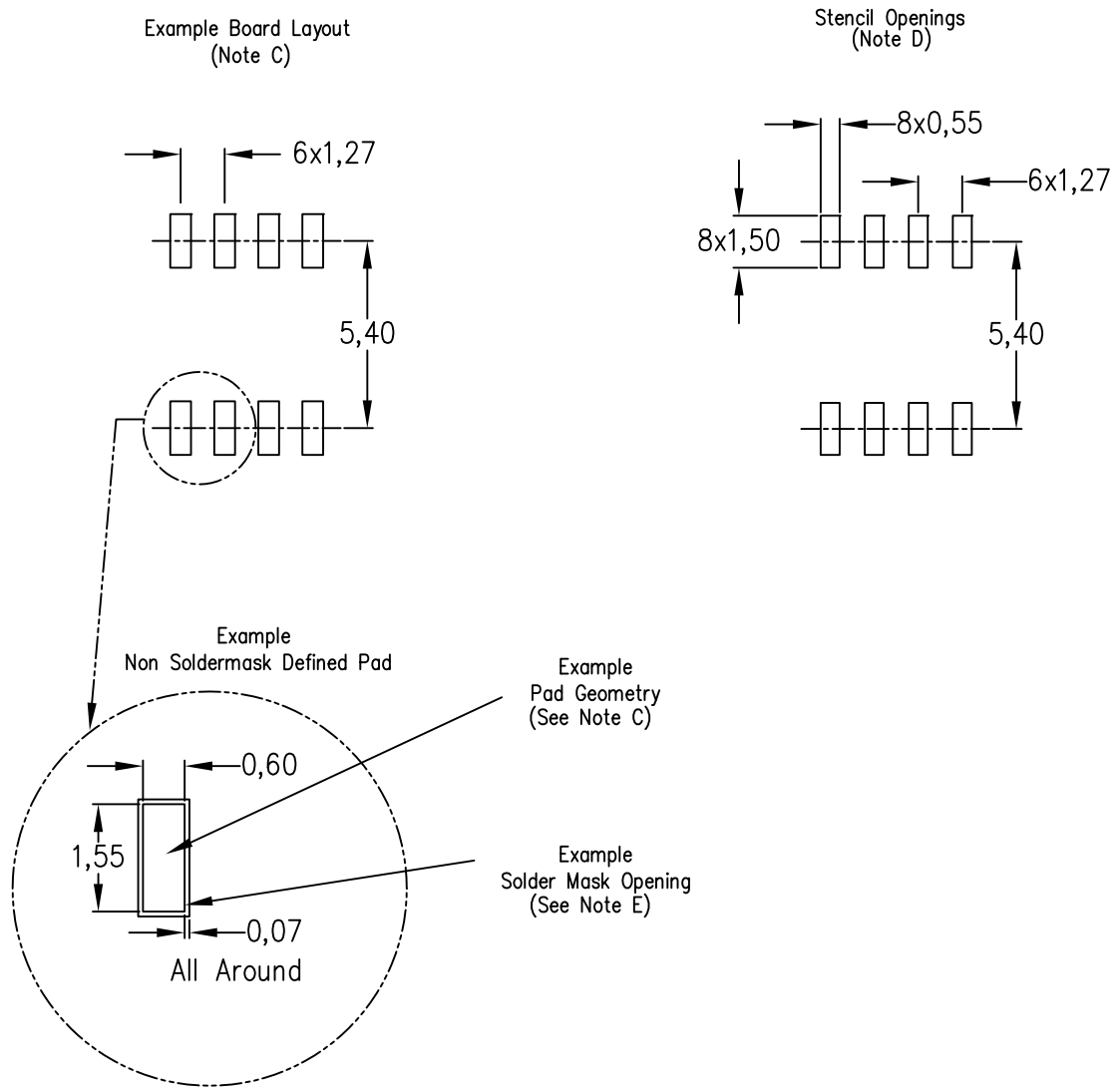

NOTES:
A. All linear dimensions are in millimeters.
B. This drawing is subject to change without notice.
C. Publication IPC–7351 is recommended for alternate designs.
D. Laser cutting apertures with trapezoidal walls and also rounding corners will offer better paste release. Customers should contact their board assembly site for stencil design recommendations. Refer to IPC–7525 for other stencil recommendations.
E. Customers should contact their board fabrication site for solder mask tolerances between and around signal pads.

IMPORTANT NOTICE

Texas Instruments Incorporated and its subsidiaries (TI) reserve the right to make corrections, enhancements, improvements and other changes to its semiconductor products and services per JESD46, latest issue, and to discontinue any product or service per JESD48, latest issue. Buyers should obtain the latest relevant information before placing orders and should verify that such information is current and complete. All semiconductor products (also referred to herein as “components”) are sold subject to TI’s terms and conditions of sale supplied at the time of order acknowledgment.

TI warrants performance of its components to the specifications applicable at the time of sale, in accordance with the warranty in TI’s terms and conditions of sale of semiconductor products. Testing and other quality control techniques are used to the extent TI deems necessary to support this warranty. Except where mandated by applicable law, testing of all parameters of each component is not necessarily performed.

TI assumes no liability for applications assistance or the design of Buyers’ products. Buyers are responsible for their products and applications using TI components. To minimize the risks associated with Buyers’ products and applications, Buyers should provide adequate design and operating safeguards.

TI does not warrant or represent that any license, either express or implied, is granted under any patent right, copyright, mask work right, or other intellectual property right relating to any combination, machine, or process in which TI components or services are used. Information published by TI regarding third-party products or services does not constitute a license to use such products or services or a warranty or endorsement thereof. Use of such information may require a license from a third party under the patents or other intellectual property of the third party, or a license from TI under the patents or other intellectual property of TI.

Reproduction of significant portions of TI information in TI data books or data sheets is permissible only if reproduction is without alteration and is accompanied by all associated warranties, conditions, limitations, and notices. TI is not responsible or liable for such altered documentation. Information of third parties may be subject to additional restrictions.

Resale of TI components or services with statements different from or beyond the parameters stated by TI for that component or service voids all express and any implied warranties for the associated TI component or service and is an unfair and deceptive business practice. TI is not responsible or liable for any such statements.

Buyer acknowledges and agrees that it is solely responsible for compliance with all legal, regulatory and safety-related requirements concerning its products, and any use of TI components in its applications, notwithstanding any applications-related information or support that may be provided by TI. Buyer represents and agrees that it has all the necessary expertise to create and implement safeguards which anticipate dangerous consequences of failures, monitor failures and their consequences, lessen the likelihood of failures that might cause harm and take appropriate remedial actions. Buyer will fully indemnify TI and its representatives against any damages arising out of the use of any TI components in safety-critical applications.

In some cases, TI components may be promoted specifically to facilitate safety-related applications. With such components, TI’s goal is to help enable customers to design and create their own end-product solutions that meet applicable functional safety standards and requirements. Nonetheless, such components are subject to these terms.

No TI components are authorized for use in FDA Class III (or similar life-critical medical equipment) unless authorized officers of the parties have executed a special agreement specifically governing such use.

Only those TI components which TI has specifically designated as military grade or “enhanced plastic” are designed and intended for use in military/aerospace applications or environments. Buyer acknowledges and agrees that any military or aerospace use of TI components which have ***not*** been so designated is solely at the Buyer's risk, and that Buyer is solely responsible for compliance with all legal and regulatory requirements in connection with such use.

TI has specifically designated certain components as meeting ISO/TS16949 requirements, mainly for automotive use. In any case of use of non-designated products, TI will not be responsible for any failure to meet ISO/TS16949.

Products		**Applications**	
Audio	www.ti.com/audio	Automotive and Transportation	www.ti.com/automotive
Amplifiers	amplifier.ti.com	Communications and Telecom	www.ti.com/communications
Data Converters	dataconverter.ti.com	Computers and Peripherals	www.ti.com/computers
DLP® Products	www.dlp.com	Consumer Electronics	www.ti.com/consumer-apps
DSP	dsp.ti.com	Energy and Lighting	www.ti.com/energy
Clocks and Timers	www.ti.com/clocks	Industrial	www.ti.com/industrial
Interface	interface.ti.com	Medical	www.ti.com/medical
Logic	logic.ti.com	Security	www.ti.com/security
Power Mgmt	power.ti.com	Space, Avionics and Defense	www.ti.com/space-avionics-defense
Microcontrollers	microcontroller.ti.com	Video and Imaging	www.ti.com/video
RFID	www.ti-rfid.com		
OMAP Applications Processors	www.ti.com/omap	**TI E2E Community**	e2e.ti.com
Wireless Connectivity	www.ti.com/wirelessconnectivity		

Mailing Address: Texas Instruments, Post Office Box 655303, Dallas, Texas 75265
Copyright © 2013, Texas Instruments Incorporated