OP4005B

622.08 MHz Optical Timing Clock

- ***Quartz SAW Stabilized Differential Output Technology***
- ***Very Low Jitter Fundamental-Mode Operation at 622.08 MHz***
- ***Voltage Tunable for Phase Locked Loop Applications***
- ***Timing Reference for Optical Data Communications Systems***
- ***Complies with Directive 2002/95/EC (RoHS)***

The OP4005B is a voltage-controlled SAW clock (VCSC) designed for phase-locked loop (PLL) applications in optical data communications systems. The differential outputs of the OP4005B are generated by high-Q, fundamental mode quartz surface acoustic wave (SAW) technology. This technique provides very low output jitter and phase noise, plus excellent immunity to power supply noise. The OP4005B differential outputs feature ±1% symmetry, and can be DC-configured to drive a wide range of high-speed logic families. The OP4005B is packaged in a hermetic metal-ceramic LCC.

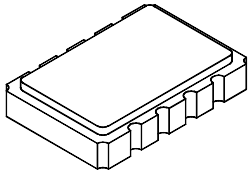

SMC-08

Absolute Maximum Ratings

Rating	Value	Units
DC Suppy Voltage	0 to 5.5	Vdc
Tuning Voltage	0 to 5.5	Vdc
Case Temperature	-55 to 100	°C

Electrical Characteristics

Characteristic		Sym	Notes	Minimum	Typical	Maximum	Units
Operating Frequency		f_O	1		622.08		MHz
Tuning Range			2	±100			ppm
Tuning Voltage			1	0		3.3	V
Tuning Linearity			1, 8		±5		%
Tuning Sensitivity		df/dv	2	140		300	ppm/V
Modulation Bandwidth				200	265	300	kHz
Q and $\overline{Q}$ Output Voltage into 50 Ω, VSWR <1.2:1		V_O	1,3	0.60		1.1	V_{P-P}
Operating Load VSWR			1,3			2:1	
Symmetry			3, 4, 5	45		55	%
Harmonic Spurious			3, 4, 6			-30	dBc
Nonharmonic Spurious			3, 4, 6, 7			-60	dBc
Phase Noise	@ 100 Hz offset		3, 6		-70		dBc/Hz
	@ 1 kHz offset		3, 6		-100		dBc/Hz
	@ 10 kHz offset		3, 6		-125		dBc/Hz
	Noise Floor		3, 6		-150		dBc/Hz
Q and $\overline{Q}$ Jitter	RMS Jitter, 10 kHz to 80 MHz		3, 4, 6, 7		0.1		ps
	No Noise on V_{CC}		3, 4, 6, 7		12		ps_{P-P}
	200 mV_{P-P} Noise, from 1 MHz to ½ f_O on V_{CC}		3		12		ps_{P-P}
Tuning Port Input Impedance				8	10		KΩ
Output DC Resistance (between Q & $\overline{Q}$)			1, 3	50			KΩ
DC Power Supply	Operating Voltage	V_{CC}	1, 3	3.13	3.3 or 5.0	5.25	Vdc
	Operating Current	I_{CC}	1, 3			70	mA
Operating Case Temperature		T_C	1, 3	-40		+85	°C
Lid Symbolization (YY=Year, WW=Week)				RFM OP4005B YYWW			

CAUTION: Electrostatic Sensitive Device. Observe precautions for handling.
COCOM CAUTION: Approval by the U.S. Department of Commerce is required prior to export of this device.

Notes:

1. Unless otherwise noted, all specifications include the combined effects of load VSWR, V_{CC} and T_C.
2. Net tuning range after tuning out the effects of initial manufacturing tolerances, VSWR pushing/pulling, V_{CC}, T_C and aging.
3. The internal design, manufacturing processes, and specifications of this device are subject to change without notice.
4. Specified only for a balanced load with a VSWR < 1.2 (50 ohms each side), and a V_{CC} = 3.0 Vdc.
5. Symmetry is defined as the width in (% of total period) measure at 50% of the peak-to-peak voltage of either output.
6. Jitter and other noise outputs due to power supply noise or mechanical vibration are not included in this specification except where noted.
7. Applies to period jitter of either differential output. Measured with a Tektronix CSA803 signal analyzer with at least 1000 samples.
8. See Figure 4.
9. One or more of the following United States patents apply: 4, 616,197; 4,670,681; 4,760,352.

©2008-2010 by RF Monolithics, Inc.

OP4005B Performance Parameters

The OP4005B has been developed to achieve high performance in five parameters critical to optical data communications applications:

Low Jitter and Phase Noise - low clock jitter (or low phase noise in the frequency domain) is critical to achieving low bit error rates in optical data communications systems. The OP4005B provides very low free-running jitter and phase noise at the OC-12 clock rate, as shown in Figures 1 and 2. This makes the OP4005B an excellent reference for the generation or regeneration of low-jitter clocks and data streams from the OC-12 rate up through OC-768. The OP4005B achieves this performance over its full -40 to +85 °C operating temperature range using RFM's patented SAW oscillator architecture.

Single-Sideband Phase Noise

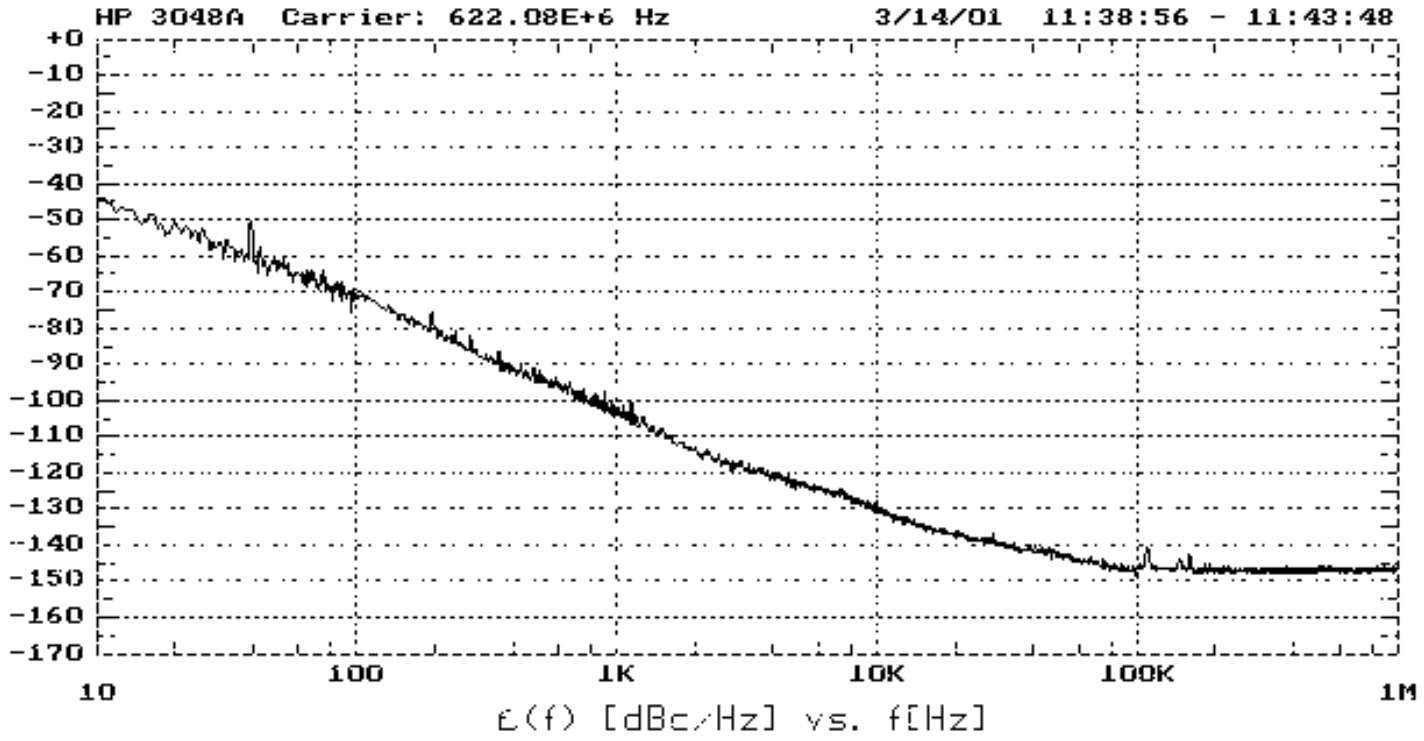

High Power Supply Noise Immunity - the OP4005B uses both differential active devices and differential SAW technology to minimize the effects of power supply noise on jitter and phase noise, as shown in Figures 2 and 3. Optical data communications circuits must switch relatively high levels of current, making power supply noise immunity an important clock requirement.

Controlled Tuning Characteristics - the OP4005B voltage tuning constant, K_V, is bounded between 140 and 300 ppm/V under locked conditions for reference signals with ±100 ppm or better stability over the OP4005B's full operating temperature and supply voltage range. This allows a PLL based on the OP4005B to be designed with a well-controlled loop bandwidth and damping factor, avoiding problems such a jitter peaking, etc. The voltage tuning characteristic of the OP4005B is monotonic from 0 to 3.3 V, supporting reliable acquisition of phase lock. Figure 4 shows typical OP4005B tuning characteristics.

©2008-2010 by RF Monolithics, Inc.

OP4005B Jitter Plot
No Power Supply Noise

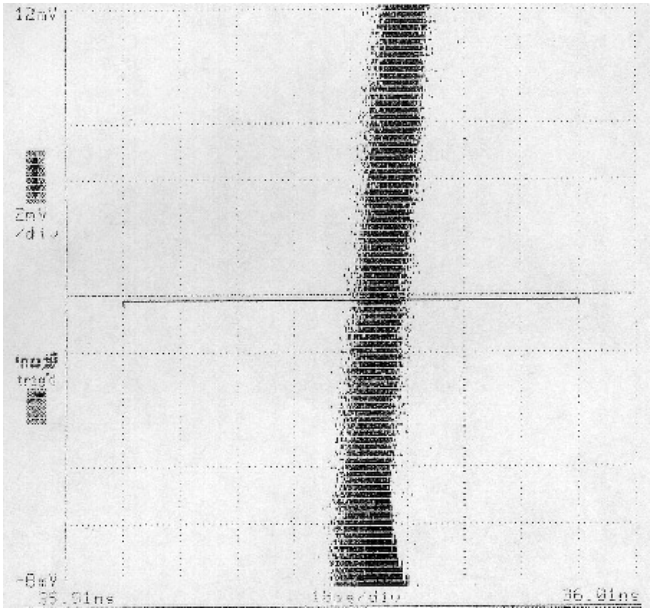

OP4005B Jitter Plot
200 mV of Power Supply Noise

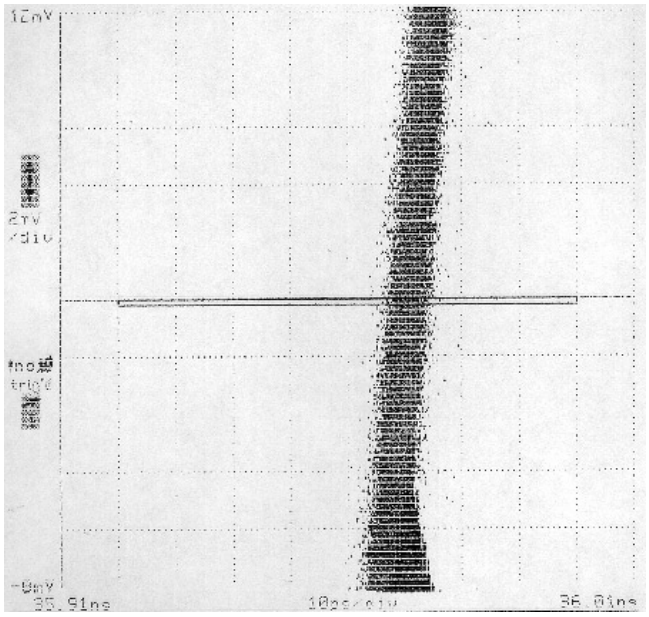

Typical OP4005B Tuning Characteristics

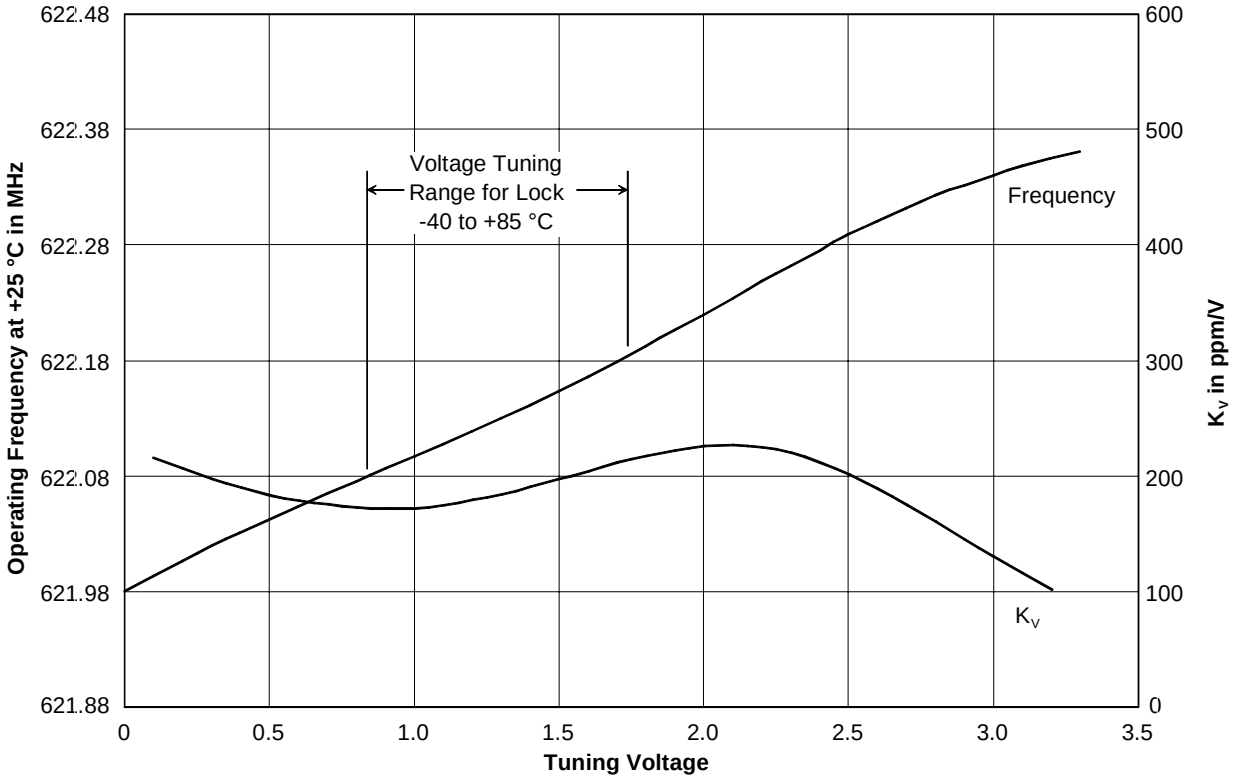

©2008-2010 by RF Monolithics, Inc.

Differential Output Symmetry - for balanced output loads, the differential output symmetry of the OP4005B is ±1%. This differential output symmetry meets the requirements of the most demanding high-speed logic families.

Output DC Voltage Configurability - the OP4005B differential outputs can be DC-configured to support a wide range of high-speed logic families and ASIC drive requirements by the selection of four resistors (see Configuring the OP4005B DC Output Voltage below) and a logic supply voltage. Each differential output of the OP4005B is AC-coupled to provide this flexibility.

OP4005B Tuning Details

The frequency tuning of the OP4005B is characterized over a voltage range of 0 to 3.3 V. The tuning voltage applied to the OP4005B should be limited to this range. Figure 4 shows the typical locked tuning range for operation over -40 or +85 °C. The frequency shift of a quartz SAW frequency control device with temperature has the shape of an inverted parabola, with the highest frequency occurring around +25 °C. At both -40 and +85 °C, there will be a 170 ppm downward shift in the frequency of the SAW device compared to +25 °C. Tuning to compensate for this temperature shift is the same as tuning 170 ppm higher at +25 °C. This is well within the tuning range of the OP4005B, as shown in Figure 4. Note that the voltage tuning constant, K_V, is bounded between 140 and 300 ppm/V under locked conditions for any temperature within the OP4005B's specified operating range.

The OP4005B tuning port presents a input impedance greater than 100 kilohms from DC to 50 kHz, and at least 1 kilohm for any RF frequency up to the operating frequency of the OP4005B. Most operational amplifiers used in active loop filters will be stable when driving the tuning port directly. Special care are should be taken to avoid ground loops in the path from the output of the phase detector though the loop filter to the tuning input of the OP4005B. For most applications, the bandwidth of the loop filter in a OP4005B PLL will be less than 50 Hz, as discussed in the example OP4005B PLL application section below.

Configuring the OP4005B DC Output Voltage

Each differential output of the OP4005B is AC coupled, allowing the static DC level at each output to be set with a resistive divider to match the logic family being driven by the clock. The parallel-equivalent resistance of the two resistors in each divider should be approximately 50 ohms. The supply voltage to the dividers, V_{LOAD}, should be two to three times the value of the static DC voltage, V_{DC}.

Referring to the accompanying figure:

$$V_{DC} = V_{LOAD} * R1/(R1 + R2)$$

and

$$50 = R1 * R2/(R1 + R2)$$

The values of the resistors R2 and R1 are given directly as:

$$R2 = 50 * V_{LOAD}/V_{DC}$$

$$R1 = 1/(0.02 - (1/R2))$$

OP4005B DC Output Voltage Adjustment

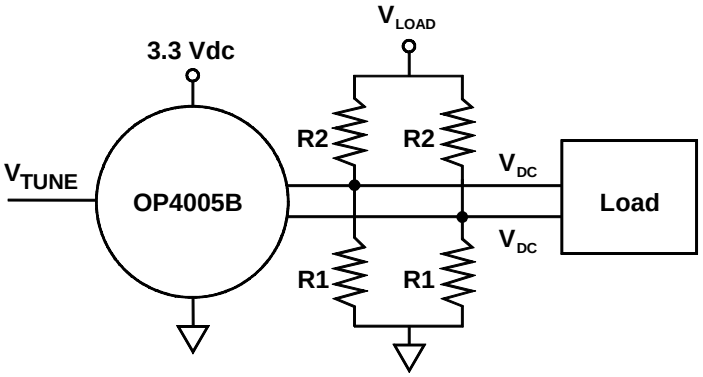

©2008-2010 by RF Monolithics, Inc.

The following table provides R1 and R2 values for six high-speed logic families commonly used in optical data communications systems. Note that the OP4005B can be used with logic families that run from a negative power supply voltage by simply using a negative V_{LOAD} voltage.

Load Type	V_{DC}	R1	R2	V_{LOAD}
10K 3.3 V PECL	1.95	120	91	3.3 V
100K 3.3 V PECL	1.88	120	91	3.3 V
10K 5 V PECL	3.65	180	68	5.0 V
100K 5 V PECL	3.58	180	68	5.0 V
10K -5 V NECL	-1.30	240	62	-5.0 V
100K -5 V NECL	-1.42	240	62	-5.0 V

OP4005B Enable/Disable

Pin 3 on the OP4005B is the enable/disable control pin for the clock outputs. When Pin 3 is grounded, full output power is available from the clock. When Pin 3 is pulled to Vcc, the power on the clock outputs is decreased at least 25 dB.

PLL for Generating a High Stability, Low Jitter OC-12 Clock

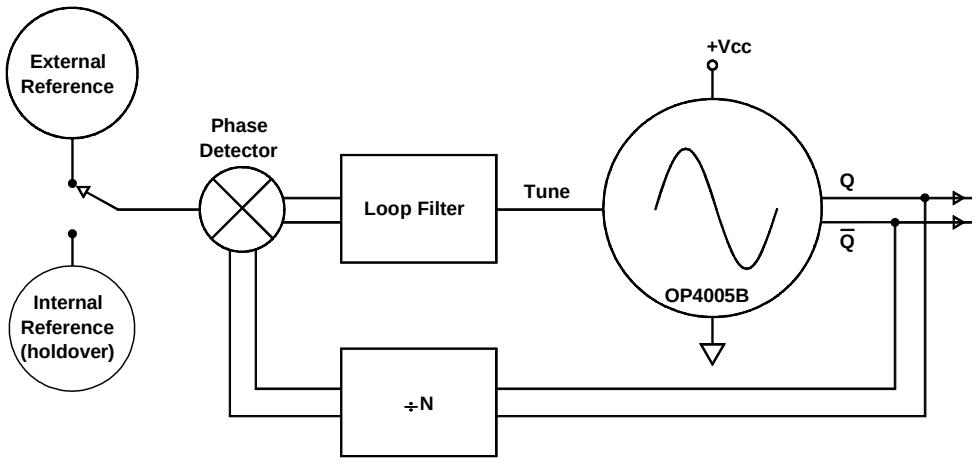

Example OP4005B Phase-Locked Loop Application

One of the most important applications for the OP4005B is in a PLL circuit used to generate a very high quality OC-12 clock. The PLL combines the long-term stability of a precision external or internal 19.44 MHz reference clock with the very low jitter and phase noise of the OP4005B. A block diagram of the PLL is shown in Figure 6. A sample of the OP4005B output is divided by 32 and is compared to a 19.44 MHz reference clock in the phase detector. The loop filter at the output of the phase detector is set to a very low bandwidth (less than 50 Hz typical). This imparts the long-term stability of the precision 19.44 MHz reference to the OP4005B without degrading the OP4005B's low jitter and phase noise.

©2008-2010 by RF Monolithics, Inc.

SMC-8 8-Terminal Surface Mount Case

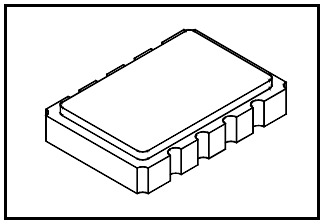

Dimension	mm		Inches	
	MIN	MAX	MIN	MAX
A	13.46	13.97	0.530	0.550
B	9.14	9.66	0.360	0.380
C	1.93 Nominal		0.076 Nominal	
D	3.56 Nominal		0.141 Nominal	
E	2.24 Nominal		0.088 Nominal	
F	1.27 Nominal		0.050 Nominal	
G	2.54 Nominal		0.100 Nominal	
H	3.05 Nominal		0.120 Nominal	
J	1.93 Nominal		0.076 Nominal	
K	5.54 Nominal		0.218 Nominal	
L	4.32 Nominal		0.170 Nominal	
M	4.83 Nominal		0.190 Nominal	
N	0.50 Nominal		0.020 Nominal	

ELECTRICAL CONNECTIONS

Terminal Number	Connection
1	V_{CC}
2	Ground
3	Enable/Disable
4	Q Output
5	$\overline{Q}$ Output
6	Ground
7	
8	Tuning Input
LID	Ground

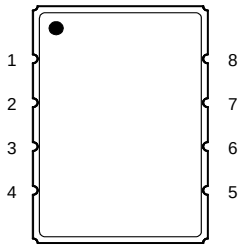

TOP VIEW

Typical Printed Circuit Board Land Pattern

A typical land pattern for a circuit board is shown on the right.

Grounding of the metallic center pad is optional.

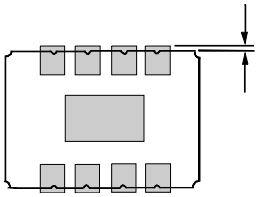

Typically 0.01" to 0.05" or 0.25 mm to 1.25 mm (8 Places)

(The optimum value of this dimension is dependent on the PCB assembly process employed.)

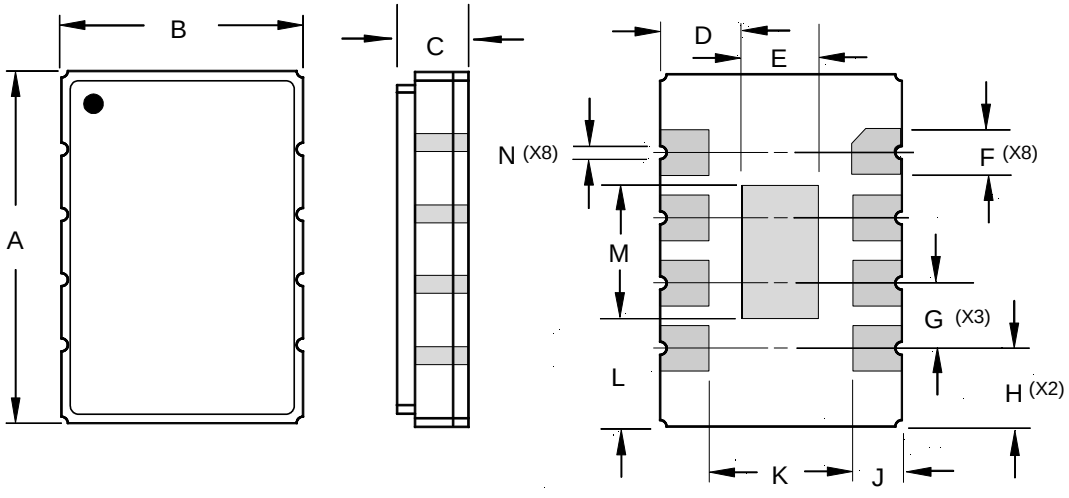

©2008-2010 by RF Monolithics, Inc.

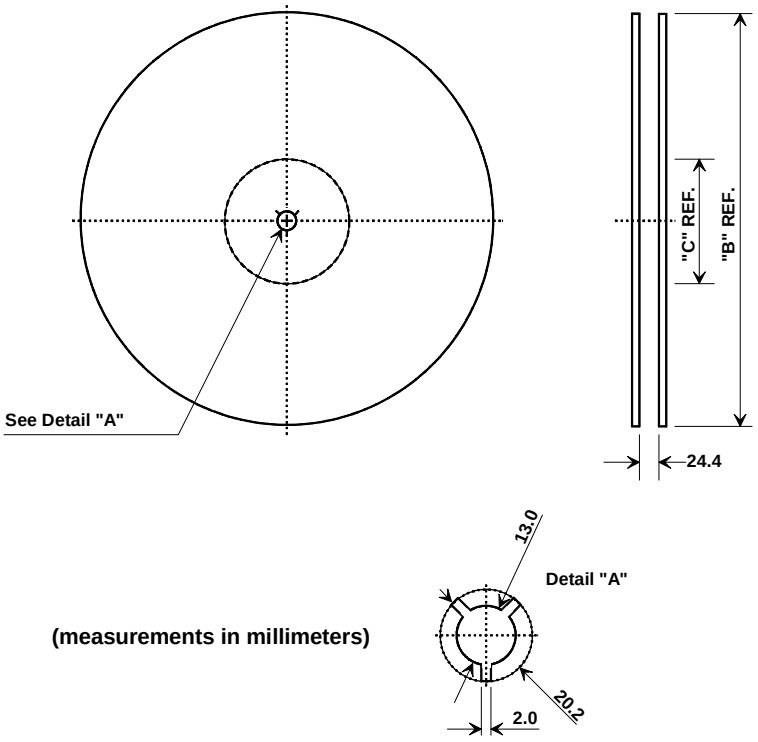

(measurements in millimeters)

SMC-08 Case

Reel Size			Quantity Per Reel	
"B" Nominal		"C" Nominal	Min	Max
13 Inch	330 mm	100 mm	200	1000

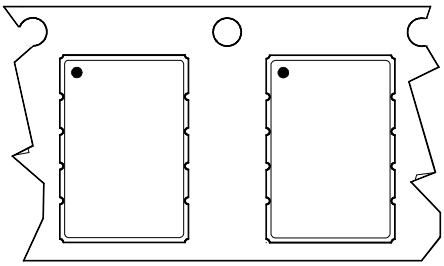

Orientation in Tape Carrier as Shipped

Dimensions

Carrier Tape Dimensions		Cover Tape Size
Ao	.383 ± .004 (9.7 mm)	21.3 mm
Bo	.554 ± .004 (14.1 mm)	
Ko	.130 ± .004 (3.3 mm)	
P	12 mm	
W	24 mm	
Tape Length	60 m	
Pockets/m	83	

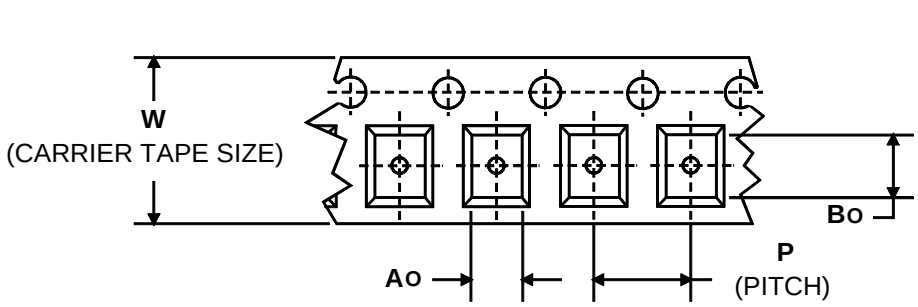

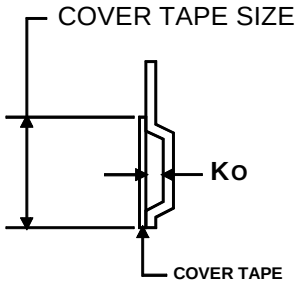

©2008-2010 by RF Monolithics, Inc.