Plastic Infrared Emitting Diode

OP165, OP166 Series



Features:

- T-1 (3 mm) package style
- Choice of narrow or wide irradiance pattern
- Choice of dome lens or flat lens
- Mechanically and spectrally matched to other OPTEK devices
- Higher power output than GaAs at equivalent drive currents

Description:

Each device in the **OP165** and **OP166** series is a high intensity gallium arsenide infrared emitting diode (GaAlAs) that is molded in an IR transmissive clear epoxy package with either a dome or flat lens. Devices feature narrow and wide irradiance patterns and a variety of electrical characteristics. The small T-1 package style makes these devices ideal for space -limited applications.

OP165 and OP166 devices are mechanically and spectrally matched to the OP505 and OP535 series devices.

Please refer to Application Bulletins 208 and 210 for additional design information and reliability (degradation) data.

Applications:

- Space-limited applications
- Applications requiring coupling efficiency

Ordering Information

Part Number	LED Peak Wavelength	Output Power (mW/cm^2) Min / Max	I_F (mA) Typ / Max	Total Beam Angle	Lead Length
OP165A	935 nm	1.95 / NA	20 / 50	18°	0.50"
OP165B		1.40 / 2.20			
OP165C		0.85 / 1.60			
OP165D		0.28 / NA			
OP165W		0.50 / NA		90°	
OP166A		1.95 / NA		18°	
OP166B		1.40 / 2.20			
OP166W		0.50 / NA		90°	

RoHS

General Note
TT Electronics reserves the right to make changes in product specification without notice or liability. All information is subject to TT Electronics' own data and is considered accurate at time of going to print.

© TT electronics plc

OPTEK Technology, Inc.
1645 Wallace Drive, Carrollton, TX 75006|Ph: +1 972 323 2200
www.optekinc.com | www.ttelectronics.com

Plastic Infrared Emitting Diode

OP165, OP166 Series

OP165 (A, B, C, D)

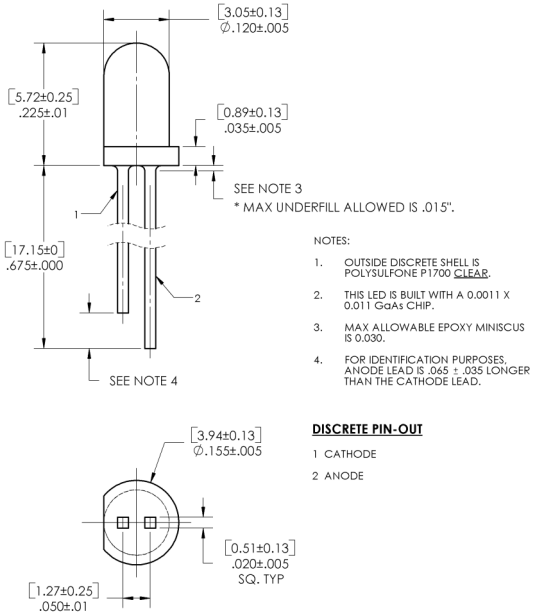

NOTES:

1. OUTSIDE DISCRETE SHELL IS POLYSULFONE P1700 CLEAR.
2. THIS LED IS BUILT WITH A 0.0011 X 0.011 GaAs CHIP.
3. MAX ALLOWABLE EPOXY MINISCUS IS 0.030.
4. FOR IDENTIFICATION PURPOSES, ANODE LEAD IS .065 ± .035 LONGER THAN THE CATHODE LEAD.

DISCRETE PIN-OUT

1 CATHODE

2 ANODE

OP165W

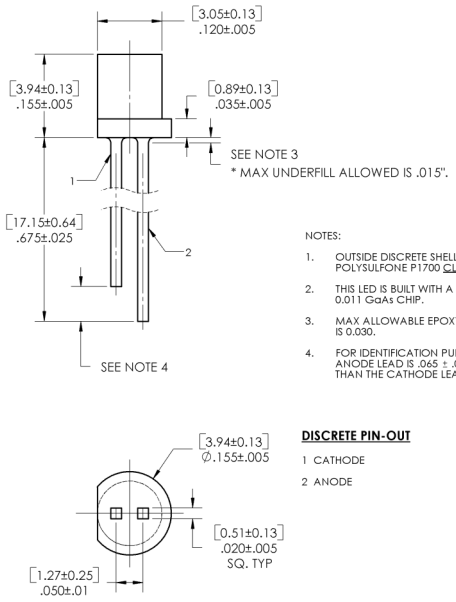

NOTES:

1. OUTSIDE DISCRETE SHELL IS POLYSULFONE P1700 CLEAR.
2. THIS LED IS BUILT WITH A 0.011 X 0.011 GaAs CHIP.
3. MAX ALLOWABLE EPOXY MINISCUS IS 0.030.
4. FOR IDENTIFICATION PURPOSES, ANODE LEAD IS .065 ± .035 LONGER THAN THE CATHODE LEAD.

DISCRETE PIN-OUT

1 CATHODE

2 ANODE

DIMENSIONS ARE IN: [MILLIMETERS] INCHES

OP166 (A, B)

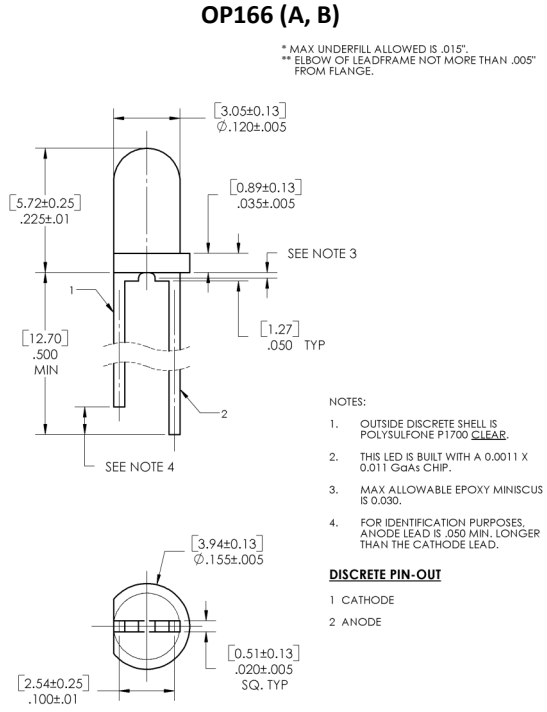

NOTES:

1. OUTSIDE DISCRETE SHELL IS POLYSULFONE P1700 CLEAR.
2. THIS LED IS BUILT WITH A 0.0011 X 0.011 GaAs CHIP.
3. MAX ALLOWABLE EPOXY MINISCUS IS 0.030.
4. FOR IDENTIFICATION PURPOSES, ANODE LEAD IS .050 MIN. LONGER THAN THE CATHODE LEAD.

DISCRETE PIN-OUT

1 CATHODE

2 ANODE



Pin #	LED
1	Cathode
2	Anode

OP166W

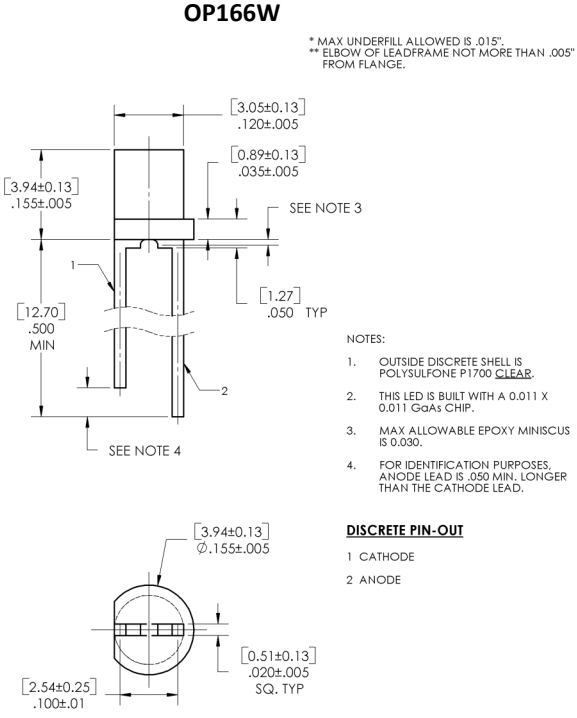

NOTES:

1. OUTSIDE DISCRETE SHELL IS POLYSULFONE P1700 CLEAR.
2. THIS LED IS BUILT WITH A 0.011 X 0.011 GaAs CHIP.
3. MAX ALLOWABLE EPOXY MINISCUS IS 0.030.
4. FOR IDENTIFICATION PURPOSES, ANODE LEAD IS .050 MIN. LONGER THAN THE CATHODE LEAD.

DISCRETE PIN-OUT

1 CATHODE

2 ANODE

CONTAINS POLYSULFONE

To avoid stress cracking, we suggest using ND Industries' **Vibra-Tite** for thread-locking. **Vibra-Tite** evaporates fast without causing structural failure in OPTEK'S molded plastics.

General Note
TT Electronics reserves the right to make changes in product specification without notice or liability. All information is subject to TT Electronics' own data and is considered accurate at time of going to print.

© TT electronics plc

OPTEK Technology, Inc.
1645 Wallace Drive, Carrollton, TX 75006 | Ph: +1 972 323 2200
www.optekinc.com | www.ttelectronics.com

Electrical Specifications

Absolute Maximum Ratings (T_A = 25° C unless otherwise noted)	
Storage and Operating Temperature Range	-40° C to +100° C
Reverse Voltage	2.0 V
Continuous Forward Current	50 mA
Peak Forward Current (1 µs pulse width, 300 pps)	3.0 A
Lead Soldering Temperature [1/16 inch (1.6 mm) from case for 5 seconds with soldering iron]	260° C
Power Dissipation	100 mW(1)

Electrical Characteristics (T_A = 25° C unless otherwise noted)

SYMBOL	PARAMETER	MIN	TYP	MAX	UNITS	TEST CONDITIONS
Input Diode						
$E_{E\ (APT)}$	Apertured Radiant Incidence OP165A, OP166A	1.95	-	-	mW/cm^2	I_F = 20 mA(2)
P_O	Radiant Power Output OP165W, OP166W	0.50	-	-	mW	I_F = 20 mA
V_F	Forward Voltage	-	-	1.60	V	I_F = 20 mA
I_R	Reverse Current	-	-	100	µA	V_R= 2 V
λ_P	Wavelength at Peak Emission	-	935	-	nm	I_F = 10 mA
B	Spectral Bandwidth between Half Power Points	-	50	-	nm	I_F = 10 mA
$\Delta\lambda_P/\Delta T$	Spectral Shift with Temperature OP165, OP166 (A, B, C, D) OP165W, OP166W	- -	- ±0.30	- -	nm/°C	I_F = Constant
θ_{HP}	Emission Angle at Half Power Points OP165, OP166 (A, B, C, D) OP165W, OP166W	- -	18 90	- -	Degree	I_F = 20 mA
t_r	Output Rise Time	-	1000	-	ns	$I_{F(PK)}$=100 mA, PW=10 µs, D.C.=10.0%
t_f	Output Fall Time	-	500	-	ns	

Notes:

1. Derate linearly 1.33 mW/°C above 25°C
2. $E_{E(APT)}$ is a measurement of the average apertured rediant incidence ipon a sensing area 0.081" (2.06 mm) in diameter, perpendicular to and centered on the mechanical axis of the lens, and 0.590" (14.99 mm) from the measurement surface. $E_{E(APT)}$ is not necessarily uniform within the measured areas.

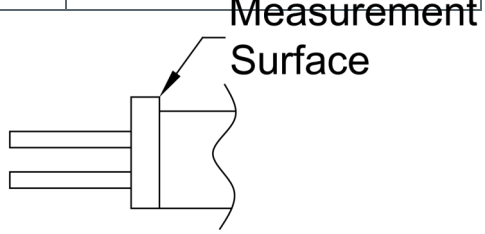

General Note
TT Electronics reserves the right to make changes in product specification without notice or liability. All information is subject to TT Electronics' own data and is considered accurate at time of going to print.

© TT electronics plc

OPTEK Technology, Inc.
1645 Wallace Drive, Carrollton, TX 75006 | Ph: +1 972 323 2200
www.optekinc.com | www.ttelectronics.com

Performance

OP165, OP166 (A, B, C, D, W)

Forward Voltage vs Forward Current vs Temperature

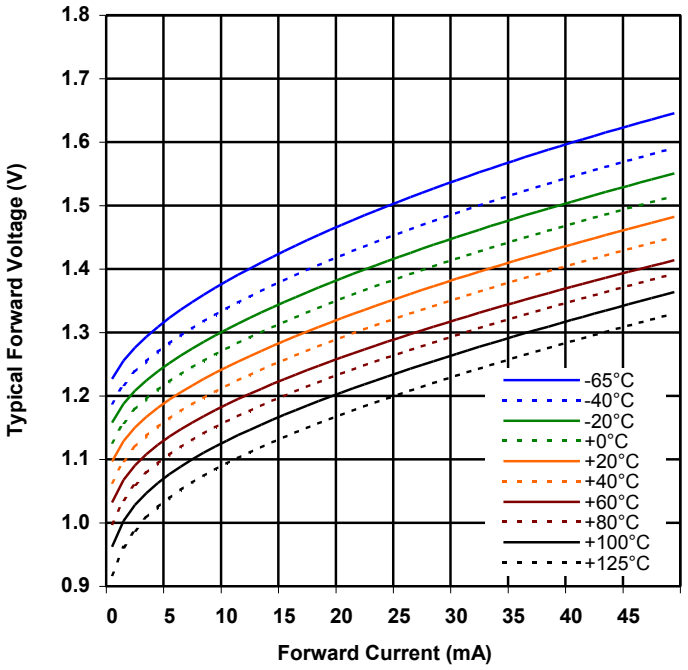

Optical Power vs I_F vs Temp

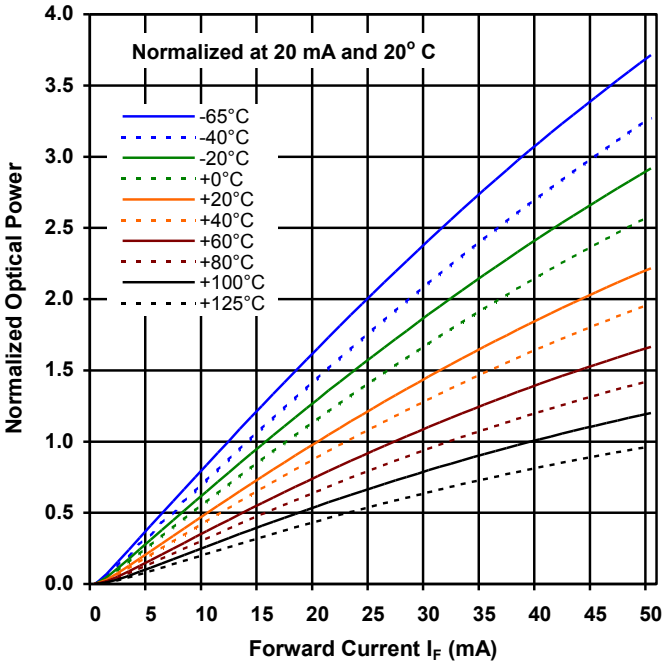

Distance vs Output Power vs Forward Current

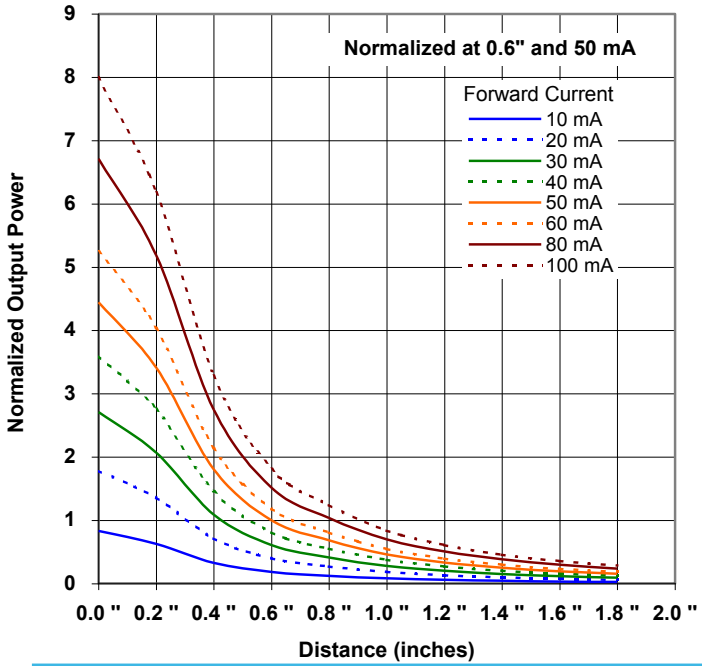

Relative Radiant Intensity vs Angular Displacement

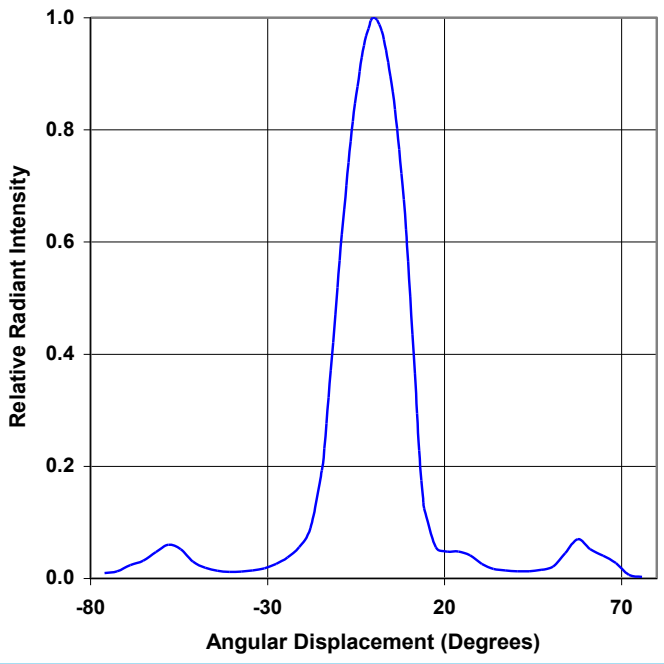

General Note

TT Electronics reserves the right to make changes in product specification without notice or liability. All information is subject to TT Electronics' own data and is considered accurate at time of going to print.

OPTEK Technology, Inc.

1645 Wallace Drive, Carrollton, TX 75006 | Ph: +1 972 323 2200

www.optekinc.com | www.ttelectronics.com

© TT electronics plc