1.5 AMP POSITIVE ADJUSTABLE VOLTAGE REGULATOR APPROVED TO DESC DRAWING 7703401



Please see mechanical outlines herein

Three Terminal, Precision Adjustable Positive Voltage Regulator In Hermetic Style Packages (LM117)

FEATURES

- Similar To Industry Standard LM117
- Approved To DESC Standardized Military Drawing Number 7703401
- Built In Thermal Overload Protection
- Short Circuit Current Limiting
- Available In Six Package Styles

DESCRIPTION

These three terminal positive regulators are supplied in hermetically sealed packages. All protective features are designed into the circuit, including thermal shutdown, current-limiting, and safe-area control. With heat sinking, these devices can deliver up to 1.5 amps of output current. The LCC-20 device is limited to .5 amps. The unit also features output voltages that can be fixed from 1.2 volts to 37 volts using external resistors.

ABSOLUTE MAXIMUM RATINGS T_C @ 25°C

Power Dissipation
- Case 2 . . . . . 1.1 W
- Case-All Others. . . . . 20 W

Input - Output Voltage Differential . . . . . 40 V
Operating Junction Temperature Range . . . . . - 55°C to + 150°C
Storage Temperature Range . . . . . - 65°C to + 150°C
Lead Temperature (Soldering 10 seconds) . . . . . 300°C
Thermal Resistance, Junction to Case:
- Case 2, LCC-20 . . . . . 17°C/W
- Case U & M, TO-257 (Isol) and SMD-3 . . . . . 4.2°C/W
- Case T&N, TO-257 (Non-Isol) and SMD-1 . . . . . 3.5°C/W
- Case Y, TO-3. . . . . 3.0°C/W

Maximum Output Current:
- Case 2 . . . . . .5 A
- Case-All Others. . . . . 1.5 A

<u>Recommended Operating Conditions:</u>
- Output Voltage Range . . . . . .1.2 to 37 VDC
- Ambient Operating Temperature Range (T_A). . . . . - 55°C to + 125°C
- Input Voltage Range . . . . . 4.25 to 41.25 VDC

3.5

ELECTRICAL CHARACTERISTICS -55°C ≤ T_A ≤ 125°C, I_L = 8mA (unless otherwise specified)
OM1320NTM, OM1320STM, OM1320NKM, OM1320SMM, OM1320NMM

Parameter	Symbol	Test Conditions		Min.	Max.	Unit
Reference Voltage	V_{REF}	V_{DIFF} = 3.0V, T_A = 25°C		1.20	1.30	
		V_{DIFF} = 3.3V	•	1.20	1.30	V
		V_{DIFF} = 40V	•	1.20	1.30	
Line Regulation	R_{LINE}	3.0V ≤ V_{DIFF} ≤ 40V, V_{out} = V_{ref}, T_A = 25°C		-9	9	mV
(Note 1)		3.3V ≤ V_{DIFF} ≤ 40V, V_{out} = V_{ref}	•	-23	23	
Load Regulation	R_{LOAD}	V_{DIFF} = 3.0V, 10mA ≤ I_L ≤ 1.5A, T_A = 25°C		-15	15	
(Note 1)		V_{DIFF} = 3.3V, 10mA ≤ I_L ≤ 1.5A	•	-15	15	mV
		V_{DIFF} = 40V, 10mA ≤ I_L ≤ 300mA, T_A = 25°C		-15	15	
		V_{DIFF} = 40V, 10mA ≤ I_L ≤ 195mA	•	-15	15	
Thermal Regulation	V_{RTH}	V_{in} = 14.6V, I_L = 1.5A		-16	16	mV
		P_d = 20 Watts, t = 20 ms, T_A =25°C				
Ripple Rejection	R_N	f = 120 Hz, V_{out} = V_{ref}	•	66		dB
(Note 2)		C_{Adj} = 10 µF				
Adjustment Pin Current	I_{Adj}	V_{DIFF} = 3.0V, T_A = 25°C			100	
		V_{DIFF} = 3.3V	•		100	µA
		V_{DIFF} = 40V	•		100	
Adjustment Pin	ΔI_{Adj}	V_{DIFF} = 3.0V, 10mA ≤ I_L ≤ 1.5A, T_A = 25°C		-5	5	
Current Change		V_{DIFF} = 3.3V, 10mA ≤ I_L ≤ 1.5A	•	-5	5	
		V_{DIFF} = 40V, 10mA ≤ I_L ≤ 300mA, T_A = 25°C	•	-5	5	
		V_{DIFF} = 40V, 10mA ≤ I_L ≤ 195mA	•	-5	5	µA
		3.0V ≤ V_{DIFF} ≤ 40V, T_A = 25°C		-5	5	
		3.3V ≤ V_{DIFF} ≤ 40V	•	-5	5	
Miminum Load Current	I_{Lmin}	V_{DIFF} = 3.0V, V_{OUT} = 1.4V (forced)			5.0	
		V_{DIFF} = 3.3V, V_{OUT} = 1.4V (forced)	•		5.0	mA
		V_{DIFF} = 40V, V_{OUT} = 1.4V (forced)	•		5.0	
Current Limit	I_{CL}	V_{DIFF} = 15V	•	1.5	3.5	
(Note 2)		V_{DIFF} = 40V, T_A = 25°C		0.18	1.5	A

Notes:
1. Load and Line Regulation are specified at a constant junction temperature. Pulse testing with low duty cycle is used. Changes in output voltage due to heating effects must be taken into account separately.
2. If not tested, shall be guaranteed to the specified limits.
3. The • denotes the specifications which apply over the full operating temperature range.

3.5

PART NUMBER DESIGNATOR		
Standard Military Drawing Number	**Omnirel Part Number**	**Omnirel Package Designation**
7703401M	**OM1320SMM**	**SMD-3**
7703401U	**OM1320STM**	**TO-257 (Isolated)**
7703401T	**OM1320NTM**	**TO-257 (non-Isolated)**
7703401Y	**OM1320 NKM**	**TO-3**
7703401N	**OM1320NMM**	**SMD-1**
77034012	**OM1320N2M**	**LCC-20**

ELECTRICAL CHARACTERISTICS -55°C ≤ T_A ≤ 125°C, I_L = 8mA (unless otherwise specified)
OM1320N2M

Parameter	Symbol	Test Conditions		Min.	Max.	Unit
Reference Voltage	V_{REF}	V_{DIFF} = 3.0V, T_A = 25°C		1.20	1.30	
		V_{DIFF} = 3.3V	•	1.20	1.30	V
		V_{DIFF} = 40V	•	1.20	1.30	
Line Regulation	R_{LINE}	3.0V ≤ V_{DIFF} ≤ 40V, V_{out} = V_{ref}, T_A = 25°C		-9	9	mV
(Note 1)		3.3V ≤ V_{DIFF} ≤ 40V, V_{out} = V_{ref}	•	-23	23	
Load Regulation	R_{LOAD}	V_{DIFF} = 3.0V, 10mA ≤ I_L ≤ .5A, T_A = 25°C		-15	15	
(Note 1)		V_{DIFF} = 3.3V, 10mA ≤ I_L ≤ .5A	•	-15	15	mV
		V_{DIFF} = 40V, 10mA ≤ I_L ≤ 150mA, T_A = 25°C		-15	15	
		V_{DIFF} = 40V, 10mA ≤ I_L ≤ 100mA	•	-15	15	
Thermal Regulation	V_{RTH}	V_{in} = 14.6V, I_L = 300mA		-16	16	mV
		P_d = 4 Watts, t = 20 ms, T_A =25°C				
Ripple Rejection	R_N	f = 120 Hz, V_{out} = V_{ref}	•	66		dB
(Note 2)		C_{Adj} = 10 µF				
Adjustment Pin Current	I_{Adj}	V_{DIFF} = 3.0V, T_A = 25°C			100	
		V_{DIFF} = 3.3V	•		100	µA
		V_{DIFF} = 40V	•		100	
Adjustment Pin	ΔI_{Adj}	V_{DIFF} = 3.0V, 10mA ≤ I_L ≤ .5A, T_A = 25°C		-5	5	
Current Change		V_{DIFF} = 3.3V, 10mA ≤ I_L ≤ .5A	•	-5	5	
		V_{DIFF} = 40V, 10mA ≤ I_L ≤ 150mA, T_A = 25°C	•	-5	5	
		V_{DIFF} = 40V, 10mA ≤ I_L ≤ 100mA	•	-5	5	µA
		3.0V ≤ V_{DIFF} ≤ 40V, T_A = 25°C		-5	5	
		3.3V ≤ V_{DIFF} ≤ 40V	•	-5	5	
Miminum Load Current	I_{Lmin}	V_{DIFF} = 3.0V, V_{OUT} = 1.4V (forced)			5.0	
		V_{DIFF} = 3.3V, V_{OUT} = 1.4V (forced)	•		5.0	mA
		V_{DIFF} = 40V, V_{OUT} = 1.4V (forced)	•		5.0	
Current Limit	I_{CL}	V_{DIFF} = 15V	•	.5	1.65	
(Note 2)		V_{DIFF} = 40V, T_A = 25°C		0.15	.065	A

Notes:
1. Load and Line Regulation are specified at a constant junction temperature. Pulse testing with low duty cycle is used. Changes in output voltage due to heating effects must be taken into account separately.
2. If not tested, shall be guaranteed to the specified limits.
3. The • denotes the specifications which apply over the full operating temperature range.

STANDARD APPLICATION

* C_{in} is required if regulator is located an appreciable distance from power supply filter.

** C_o is not needed for stability, however it does improve transient response.

$$V_{out} = 1.25\ V\ (1 + \frac{R_2}{R_1}) + I_{Adj} R_2$$

Since I_{Adj} is controlled to less than 100 µA, the error associated with this term is negligible in most applications.

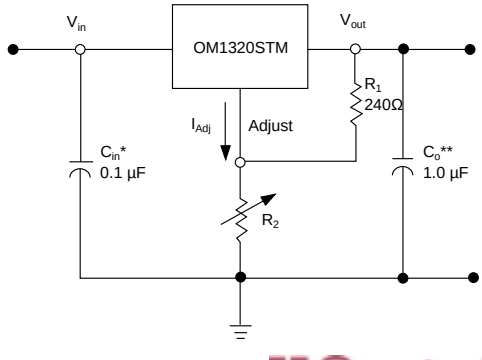

MECHANICAL OUTLINE

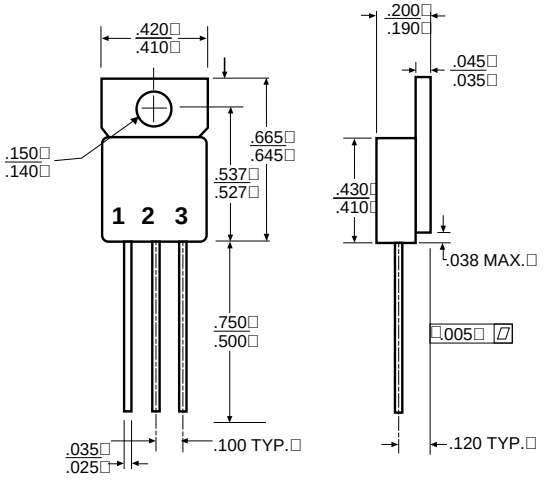

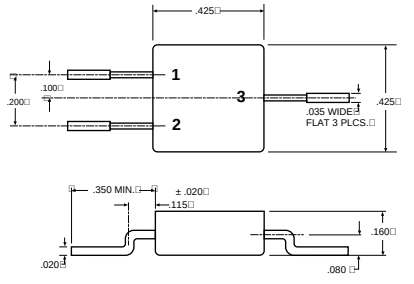

OM1320SMM
Front View
Pin 1 - Adjust
Pin 2 - Input
Pin 3 - Output
Case - Isolated

OM1320STM
Isolated
Front View
Pin 1 - Adjust
Pin 2 - Output
Pin 3 - Input
Tab - Isolated

OM1320NTM
Non-Isolated
Front View
Pin 1 - Adjust
Pin 2 - Output
Pin 3 - Input
Tab - Output

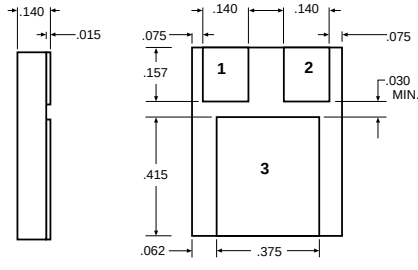

OM1320NMM
Pin 1 - Adjust
Pin 2 - Input
Pin 3 - Output

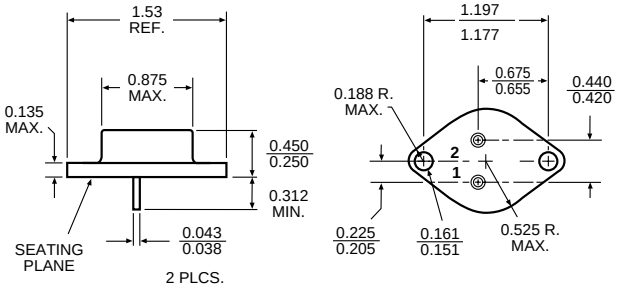

OM1320NKM
Pin 1 - Adjust
Pin 2 - Input
Case - Output

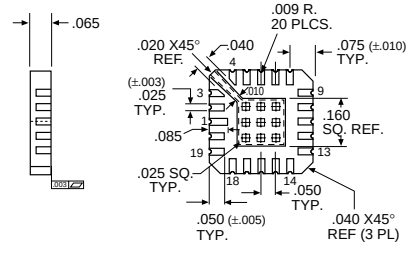

OM1320N2M

Pin 1	V_{OUT}(Sense)	Pin 11	NC
Pin 2	NC	Pin 12	NC
Pin 3	NC	Pin 13	NC
Pin 4	NC	Pin 14	NC
Pin 5	V_{IN}	Pin 15	NC
Pin 6	NC	Pin 16	NC
Pin 7	NC	Pin 17	NC
Pin 8	NC	Pin 18	NC
Pin 9	NC	Pin 19	NC
Pin 10	ADJUST	Pin 20	V_{OUT}

For additional information please see the mechanical outline section.