OSA Opto Light GmbH
Köpenicker Str. 325 / Haus 201
12555 Berlin - Germany
Tel. +49 (0)30 65 76 26 83
Fax: +49 (0)30 65 76 26 81
E-Mail: contact@osa-opto.com

preliminary

Series 330 - 1206 with Lens

thin film technology

Features



- with lens, mounting from backside of PCB
- view angle 40°
- size 1206: 3,2(L) x 1,6(W) x 1,9(H) mm
- circuit substrate: glass laminated epoxy
- devices are ROHS conform
- lead free solderable, soldering pads: gold plated
- taped in 8 mm blister tape, cathode to transporting perforation
- all devices sorted into luminous intensity classes
- taping: face-up (TU) or face-down (TD) possible
- high luminous intensity types
- on request sorted in color classes

Absolute Maximum Ratings

$I_{F,max}$[mA]	$I_{F,P}$ [mA] tp ≤ 100 µs τ=1: 10	V_R [V]	$I_{R,max}$ [µA]	Thermal resistance R_{thJA} [K / W]	T_{Op} [°C]	T_{St} °[C]
30	70	5	100	450	-40...85	-40...85

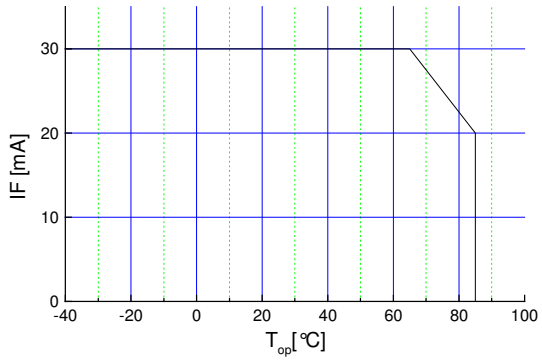

Maximal forward current (DC) characteristic

Electro-Optical Characteristics

Type	Emitting color	Marking at	Measurement I_F [mA]	V_F[V] typ	V_F[V] max	λ_d / λ_p* [nm]	I_V[mcd] min	I_V[mcd] typ
OLS-330 MY	yellow	anode	20	2,1	2,6	589	900	1400
OLS-330 MSD	red	anode	20	2,1	2,6	624	900	1400

© 2008

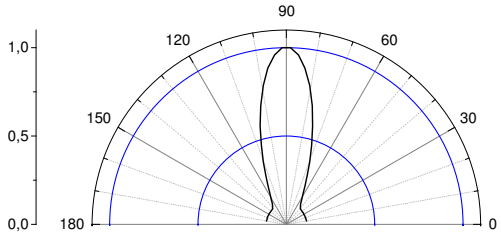

view angle

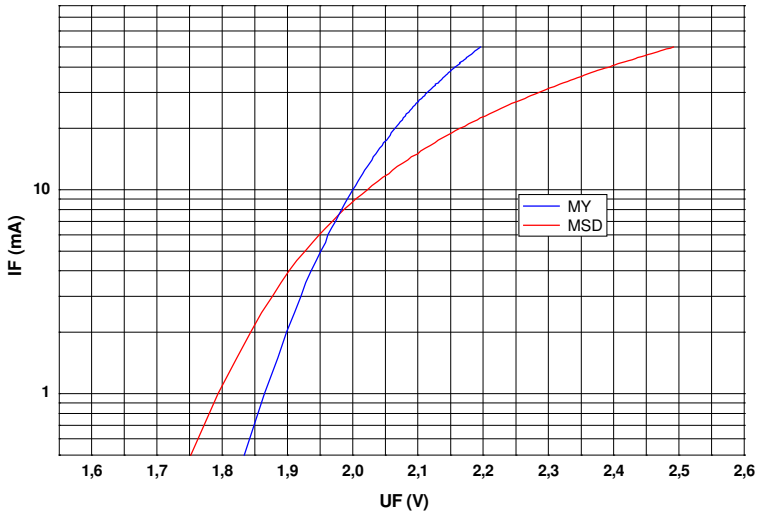

$U_F - I_F$ characteristic

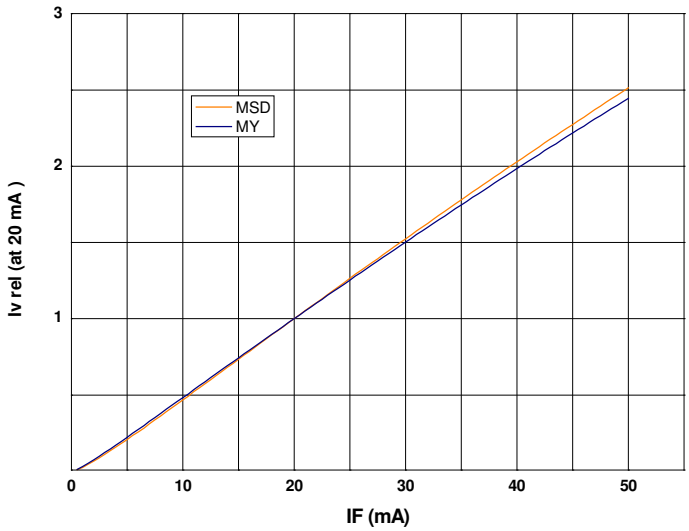

$I_F - I_{v,\,rel}$ characteristic

© 2008

Outline Drawing

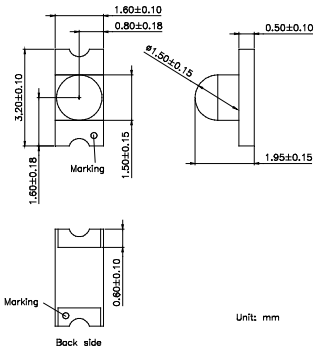

Recommended Soldering Patterns

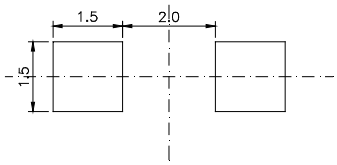

Pad TU

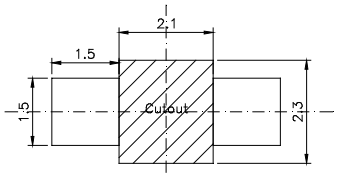

Pad TD

Soldering Conditions

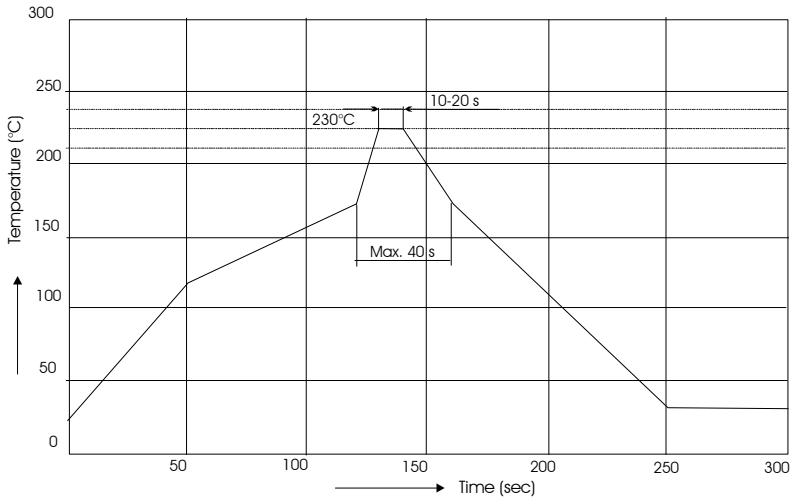

IR reflow soldering profile

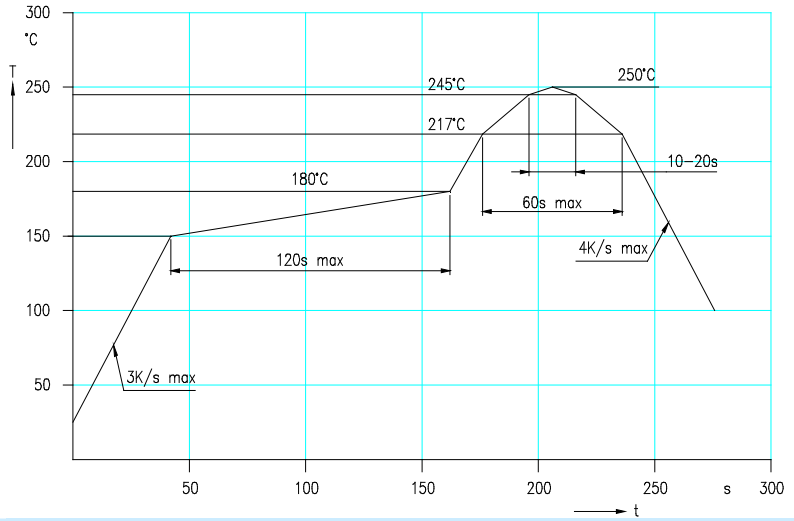

IR reflow soldering profile for lead free soldering

Manual soldering: max power of iron 25W/ 3s/ 300°C

© 2008

Ordering Code For Parts

Series		Color		Encapsulation		Packaging
OLS-330	-	???????	-	X	-	?

TU - taped up
TD - taped down

X - uncolored clear

Type definition, e.g. OLS-330 MY-X -TU

LED Luminous Intensity Groups And Subgroups [mcd]

(general information – not this device specific)

C:	0.28	-	0.45	C1:	0.28	-	0.36	Q1:	71	-	90			
D:	0.45	-	0.71	C2:	0.36	-	0.45	Q2:	90	-	112			
E:	0.71	-	1.12	D1:	0.45	-	0.56	R1:	112	-	140			
F:	1.12	-	1.80	D2:	0.56	-	0.71	R2:	140	-	180			
G:	1.80	-	2.80	E1:	0.71	-	0.90	S1:	180	-	224			
H:	2.80	-	4.50	E2:	0.90	-	1.12	S2:	224	-	280			
J:	4.50	-	7.10	F1:	1.12	-	1.40	T1:	280	-	355			
K:	7.10	-	11.20	F2:	1.40	-	1.80	T2:	355	-	450			
L:	11.20	-	18.00	G1:	1.80	-	2.24	U1:	450	-	560			
				G2:	2.24	-	2.80	U2:	560	-	710			
M:	18	-	28	H1:	2.80	-	3.55	V1:	710	-	900			
N:	28	-	45	H2:	3.55	-	4.50	V2:	900	-	1120			
P:	45	-	71	J1:	4.50	-	5.60	W1:	1120	-	1420			
Q:	71	-	112	J2:	5.60	-	7.10	W2:	1420	-	1800			
R:	112	-	180	K1:	7.10	-	9.00	X1:	1800	-	2250			
S:	180	-	280	K2:	9.00	-	11.20	X2:	2250	-	2800			
T:	280	-	450	L1:	11.20	-	14.00	Y1:	2800	-	3550			
U:	450	-	710	L2:	14.00	-	18.00	Y2:	3550	-	4500			
V:	710	-	1120	M1:	18.00	-	22.40	Z1:	4500	-	5750			
W:	1120	-	1800	M2:	22.40	-	28.00	Z2:	5750	-	7100			
X:	1800	-	2800	N1:	28.00	-	35.50							
Y:	2800	-	4500	N2:	35.50	-	45.00							
Z:	4500	-	7100	P1:	45.00	-	56.00							
				P2:	56.00	-	71.00							

Measured according to CIE 127. All SMD-LEDs are 100% measured and selected on full automated equipment with an accuracy of ± 11 %.

Special service: Brightness selection in sub selections possible.
Color selection in sub selections possible (each subgroup per reel).

Attention please:

The LED output is strong enough to injure human eyes. Precautions must be taken to prevent locking directly at the LED with unaided eyes for more than a few seconds. Flashing lights have been known to cause discomfort in people, you can prevent this by taking precautions during use. Also, people should be cautions when using equipment where these LED´s are incorporated.

© 2008

Tape And Reel Packing

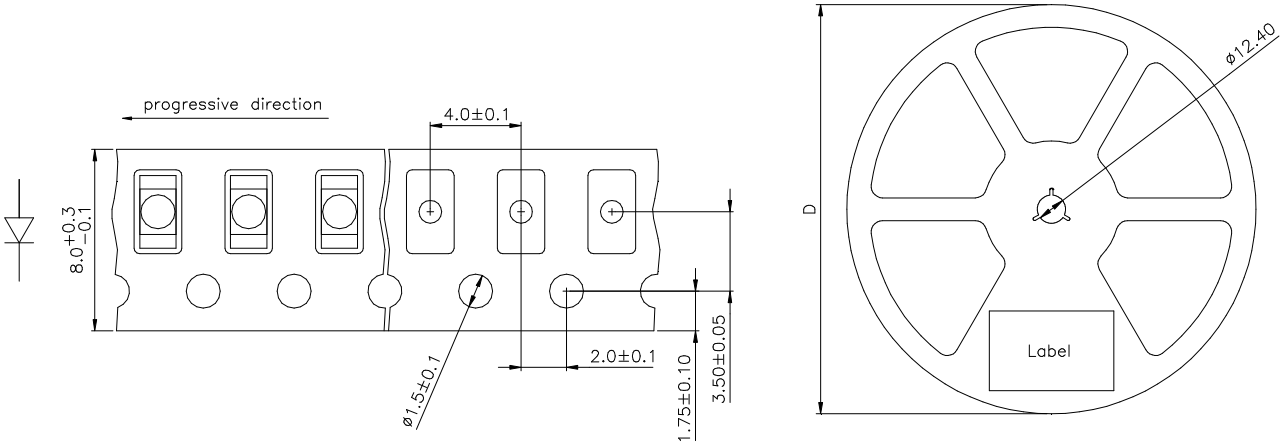

D	Parts/reel
180 mm	2000
330 mm	8000

Packing: The reel is sealed in special plastic bag with integrate ESD protection (MIL - STD 81705) including a silica dry-pack

Label

Order No.	XXXXXXXXX		Customer order No.
Type	OLS-330 ?????-??-T		
Intensity group	ZZ	Color class: CC	Color class - optional
Charge No.	1122-AAAAAA		11 Week – 22 year – A internal identification
Quantity	9999		

Attention please:

The information describes the type of component and shall not considered as assured characteristics. Terms of delivery and rights to change reserved.
Due to technical requirements components may contain dangerous substances.
The data sheet may changed without prior information; the valid issue will be on our webpage in internet.

Packaging:

Please use the recycling operators known to you.

Components used in life support devices or systems and safety systems must be expressly authorized for such purpose!

© 2008