OHD Thermal Guard

Overview

The OHD Thermal Guard is developed for thermal problem countermeasures and safety standard conformity, which are becoming increasingly important for electronic devices in recent years.

Its unique proprietary design features a magnet and a temperature-sensing soft ferromagnetic substance called Thermorite®. The material's magnetic flux density decreases as the temperature increases turning it into a paramagnetic substance at the Curie temperature.

Applications

Typical applications include atmospheric temperature detection and overheating monitoring of power transistors, power modules, room heaters, hot gas heaters, PPCs, amplifiers, motors, HDDs, FDDs and other general appliances.

Benefits

- High reliability for on/off operations
- High-speed response
- Long operational life
- Excellent environmental durability
- Compatibility with extremely low (0.1 mW or lower) signals to high power (6 W) levels
- Extremely simple circuit design
- Compact, light and easy to handle
- Dust, explosion and corrosion-proof
- Wide range of operating temperatures available in 5°C increments from +30°C to +130°C
- UL, CSA and TÜV approved
- RoHS/REACH compliant

OHD1



OHD3



OHD5R



© KEMET Electronics Corporation • KEMET Tower • One East Broward Boulevard
Fort Lauderdale, FL 33301 USA • 954-766-2800 • www.kemet.com

Ordering Information

OHD	1-	50			B
Series	Maximum Opening/Closing Power (W)	Operating Temperature (°C)			Contact Type
OHD	1 = 6W 3 = 6W 5R = 1W	30 = 30°C 35 = 35°C 40 = 40°C 45 = 45°C 50 = 50°C 55 = 55°C 60 = 60°C	65 = 65°C 70 = 70°C 75 = 75°C 80 = 80°C 85 = 85°C 90 = 90°C 95 = 95°C	100 = 100°C 105 = 105°C 110 = 110°C 115 = 115°C 120 = 120°C 125 = 125°C 130 = 130°C	B = Break M = Make (OHD1 and OHD3 only)

Structures and Principles of Operation

Thermal Guard (OHD) are temperature-sensing switches composed of a magnet and a temperature-sensing soft ferromagnetic substance called Thermorite. This material's saturation magnetic flux density decreases as the temperature increases, and it turns into a paramagnetic substance at its Curie temperature.

Thermorite properties

- Thermorite changes its magnetic property rapidly at its Curie temperature, providing quick response times.
- The Curie temperature of Thermorite does not vary with time, as it is based on a compounding ratio.
- Thermorite is stable against moisture and hazardous gas.

Thermal property of Thermorite

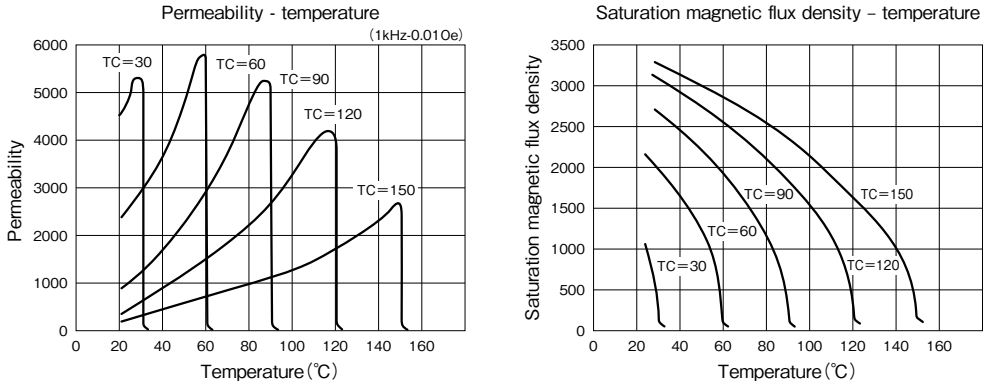

TC=Curie temperature

Structures and Principles of Operation cont.

Reed switch structure

- The reed switch is a contact switch comprised of a pair of Fe-Ni alloy reeds encased in a glass tube with inactive gas. The reeds are switched on or off by the magnetic field of a permanent magnet or magnet coil.
- The reeds in the glass tube become magnetized from the magnetic field, allowing the two reeds to make contact and connect (switch on). When the magnetic field disappears, the reeds separate and disconnect (switch off).
- The glass encasement of the reeds ensures high environmental resistance and a long operational life.

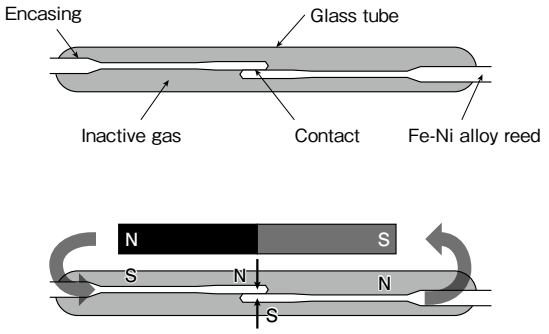

OHD principle: Break (B) type

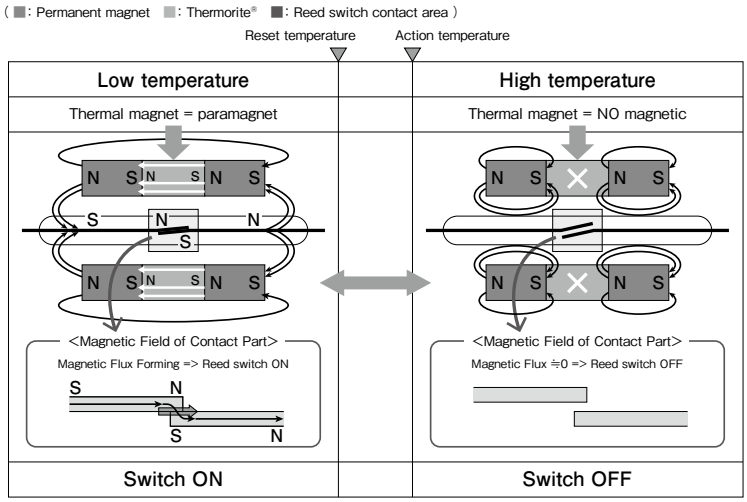

OHD principle: Make (M) type

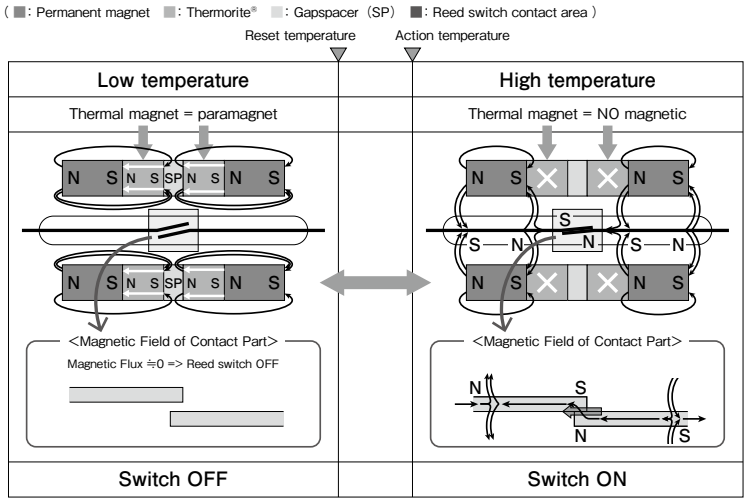

External Magnetic Field

OHD installation in external magnetic field

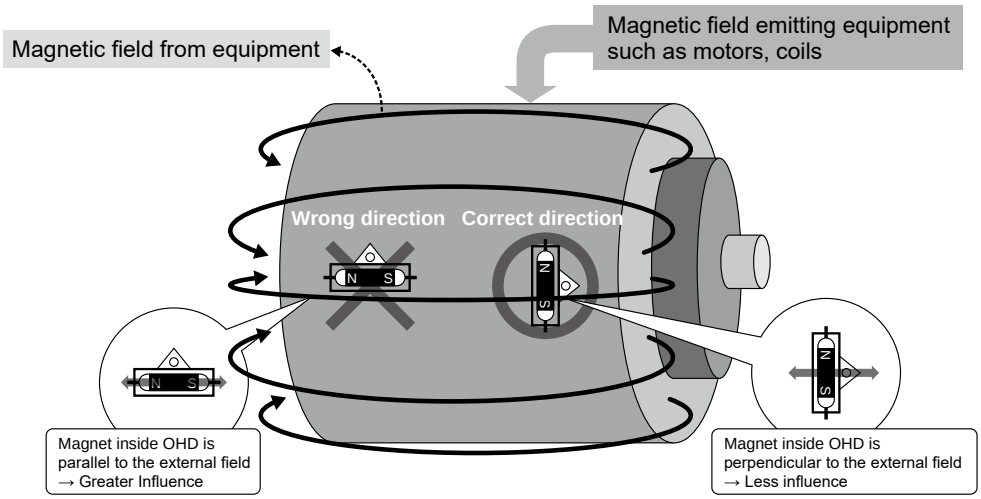

Ferromagnetic material influence

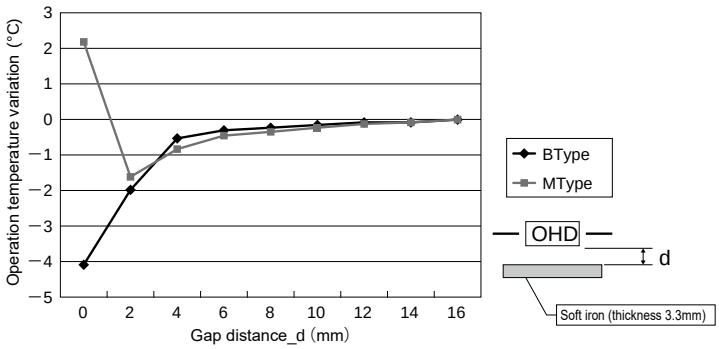

Dimensions – Millimeters

Part Number	Dimensions - Millimeters
OHD1	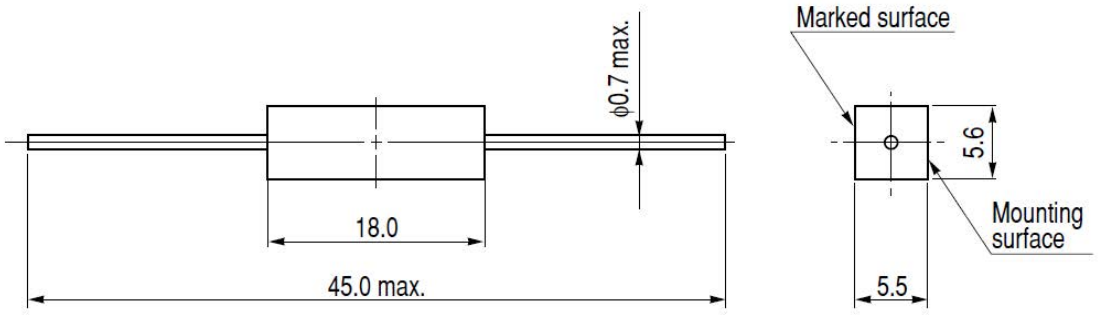
OHD1 mounting bracket	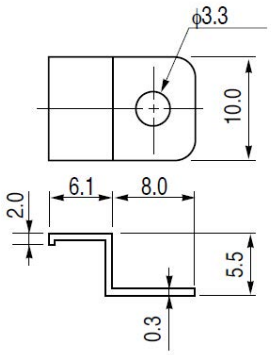 Mounting brackets designed specifically for OHD1 type are provided optionally, at separate cost. Part number is OHD1BRACKET.
OHD3	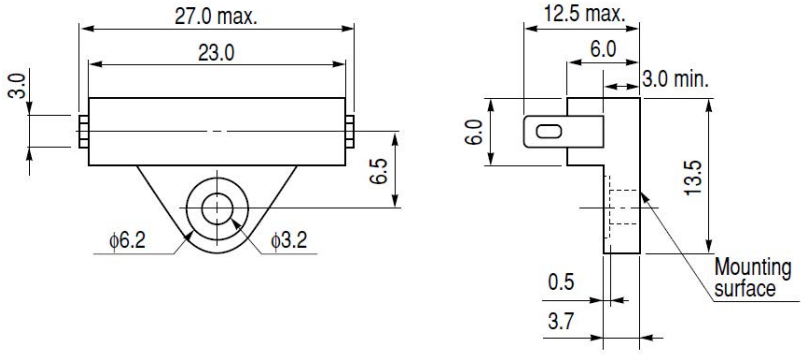
OHD5R	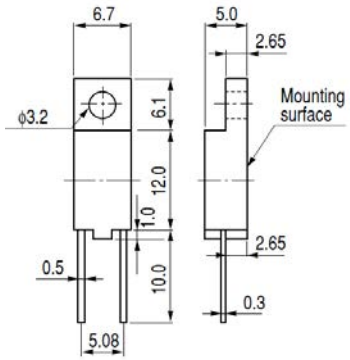

Environmental Compliance

All KEMET Thermal Sensors are RoHS compliant.

Approvals

Certification Body	File Number	Part Type
UL	E67648	OHD1, OHD3 and OHD5R
CSA	LR50414	OHD1, OHD3 and OHD5R
TÜV	R9750955	OHD1 and OHD3
	R9750944	OHD5R

Performance Characteristics

Item	Performance Characteristics	
Operations	All types	100,000 times
Condition	OHD1 and OHD3 types	100 VAC – 1.67 kΩ (purely resistive load)
	OHD5R type	30 VDC – 0.9 kΩ (purely resistive load)
Judgement	All types	1) No stick 2) Contact resistance be within 500 mΩ
Screw Torque Recommendation	OHD3 type	0.5 N•m maximum (5 kgf•cm maximum) M3 screw (non-magnetic)
	OHD5R type	0.4 N•m maximum (4 kgf•cm maximum) M3 screw (non-magnetic)
Dip Washing	All types	Using isopropyl alcohol AT normal temperature for 90 seconds
Molded Resin	All types	Alkyd Resin (UL V-0)

© KEMET Electronics Corporation • KEMET Tower • One East Broward Boulevard
Fort Lauderdale, FL 33301 USA • 954-766-2800 • www.kemet.com

Insulation & Temperature Characteristics

Shape Type	Insulation Withstand Voltage[1]	Minimum Insulation Resistance[1]	Operating Temperature Range	Switching Temperature Range	Switching Temperature Precision[2]	Differential Temperature[3]
OHD1	2,500 VAC/1 minute or 3,000 VAC/1 second	500 VDC to 100 MΩ	−20°C to +150°C	+30°C to +130°C	±5°C	10°C Maximum
OHD3						
OHD5R	1,500 VAC/1 minute or 1,800 VAC/1 second					

[1] *Between wire harness and mounting resin surface.*

[2] *Switching temperature precision does not include measurement error.*

[3] *The differential temperature is also referred to as the hysteresis temperature on thermal sensors.*

Table 1 – Ratings & Part Number Reference

Part Number	Switching Temperature (°C)	Maximum Differential Temperature (°C)	Contact Type	Maximum Opening/ Closing Voltage (V)	Maximum Opening/ Closing Current (A)	Maximum Opening/ Closing Power (W)	Minimum Opening/ Closing Current	Maximum Contact Resistance (mΩ)	Weight (g)	Approval
OHD1-30M	30°C ±5°C	10°C	Make	110 AC/DC	0.3 AC/DC	6 AC/DC	0.1 mA/1 VDC	150	1.8	UL & CSA & TÜV
OHD1-35M	35°C ±5°C	10°C	Make	110 AC/DC	0.3 AC/DC	6 AC/DC	0.1 mA/1 VDC	150	1.8	UL & CSA & TÜV
OHD1-40M	40°C ±5°C	10°C	Make	110 AC/DC	0.3 AC/DC	6 AC/DC	0.1 mA/1 VDC	150	1.8	UL & CSA & TÜV
OHD1-45M	45°C ±5°C	10°C	Make	110 AC/DC	0.3 AC/DC	6 AC/DC	0.1 mA/1 VDC	150	1.8	UL & CSA & TÜV
OHD1-50M	50°C ±5°C	10°C	Make	110 AC/DC	0.3 AC/DC	6 AC/DC	0.1 mA/1 VDC	150	1.8	UL & CSA & TÜV
OHD1-55M	55°C ±5°C	10°C	Make	110 AC/DC	0.3 AC/DC	6 AC/DC	0.1 mA/1 VDC	150	1.8	UL & CSA & TÜV
OHD1-60M	60°C ±5°C	10°C	Make	110 AC/DC	0.3 AC/DC	6 AC/DC	0.1 mA/1 VDC	150	1.8	UL & CSA & TÜV
OHD1-65M	65°C ±5°C	10°C	Make	110 AC/DC	0.3 AC/DC	6 AC/DC	0.1 mA/1 VDC	150	1.8	UL & CSA & TÜV
OHD1-70M	70°C ±5°C	10°C	Make	110 AC/DC	0.3 AC/DC	6 AC/DC	0.1 mA/1 VDC	150	1.8	UL & CSA & TÜV
OHD1-75M	75°C ±5°C	10°C	Make	110 AC/DC	0.3 AC/DC	6 AC/DC	0.1 mA/1 VDC	150	1.8	UL & CSA & TÜV
OHD1-80M	80°C ±5°C	10°C	Make	110 AC/DC	0.3 AC/DC	6 AC/DC	0.1 mA/1 VDC	150	1.8	UL & CSA & TÜV
OHD1-85M	85°C ±5°C	10°C	Make	110 AC/DC	0.3 AC/DC	6 AC/DC	0.1 mA/1 VDC	150	1.8	UL & CSA & TÜV
OHD1-90M	90°C ±5°C	10°C	Make	110 AC/DC	0.3 AC/DC	6 AC/DC	0.1 mA/1 VDC	150	1.8	UL & CSA & TÜV
OHD1-95M	95°C ±5°C	10°C	Make	110 AC/DC	0.3 AC/DC	6 AC/DC	0.1 mA/1 VDC	150	1.8	UL & CSA & TÜV
OHD1-100M	100°C ±5°C	10°C	Make	110 AC/DC	0.3 AC/DC	6 AC/DC	0.1 mA/1 VDC	150	1.8	UL & CSA & TÜV
OHD1-105M	105°C ±5°C	10°C	Make	110 AC/DC	0.3 AC/DC	6 AC/DC	0.1 mA/1 VDC	150	1.8	UL & CSA & TÜV
OHD1-110M	110°C ±5°C	10°C	Make	110 AC/DC	0.3 AC/DC	6 AC/DC	0.1 mA/1 VDC	150	1.8	UL & CSA & TÜV
OHD1-115M	115°C ±5°C	10°C	Make	110 AC/DC	0.3 AC/DC	6 AC/DC	0.1 mA/1 VDC	150	1.8	UL & CSA & TÜV
OHD1-120M	120°C ±5°C	10°C	Make	110 AC/DC	0.3 AC/DC	6 AC/DC	0.1 mA/1 VDC	150	1.8	UL & CSA & TÜV
OHD1-125M	125°C ±5°C	10°C	Make	110 AC/DC	0.3 AC/DC	6 AC/DC	0.1 mA/1 VDC	150	1.8	UL & CSA & TÜV
OHD1-130M	130°C ±5°C	10°C	Make	110 AC/DC	0.3 AC/DC	6 AC/DC	0.1 mA/1 VDC	150	1.8	UL & CSA & TÜV
OHD1-30B	30°C ±5°C	10°C	Break	110 AC/DC	0.3 AC/DC	6 AC/DC	0.1 mA/1 VDC	150	1.4	UL & CSA & TÜV
OHD1-35B	35°C ±5°C	10°C	Break	110 AC/DC	0.3 AC/DC	6 AC/DC	0.1 mA/1 VDC	150	1.4	UL & CSA & TÜV
OHD1-40B	40°C ±5°C	10°C	Break	110 AC/DC	0.3 AC/DC	6 AC/DC	0.1 mA/1 VDC	150	1.4	UL & CSA & TÜV
OHD1-45B	45°C ±5°C	10°C	Break	110 AC/DC	0.3 AC/DC	6 AC/DC	0.1 mA/1 VDC	150	1.4	UL & CSA & TÜV
OHD1-50B	50°C ±5°C	10°C	Break	110 AC/DC	0.3 AC/DC	6 AC/DC	0.1 mA/1 VDC	150	1.4	UL & CSA & TÜV
OHD1-55B	55°C ±5°C	10°C	Break	110 AC/DC	0.3 AC/DC	6 AC/DC	0.1 mA/1 VDC	150	1.4	UL & CSA & TÜV

© KEMET Electronics Corporation • KEMET Tower • One East Broward Boulevard
Fort Lauderdale, FL 33301 USA • 954-766-2800 • www.kemet.com

Table 1 – Ratings & Part Number Reference cont.

Part Number	Switching Temperature (°C)	Maximum Differential Temperature (°C)	Contact Type	Maximum Opening/ Closing Voltage (V)	Maximum Opening/ Closing Current (A)	Maximum Opening/ Closing Power (W)	Minimum Opening/ Closing Current	Maximum Contact Resistance (mΩ)	Weight (g)	Approval
OHD1-60B	60°C ±5°C	10°C	Break	110 AC/DC	0.3 AC/DC	6 AC/DC	0.1 mA/1 VDC	150	1.4	UL & CSA & TÜV
OHD1-65B	65°C ±5°C	10°C	Break	110 AC/DC	0.3 AC/DC	6 AC/DC	0.1 mA/1 VDC	150	1.4	UL & CSA & TÜV
OHD1-70B	70°C ±5°C	10°C	Break	110 AC/DC	0.3 AC/DC	6 AC/DC	0.1 mA/1 VDC	150	1.4	UL & CSA & TÜV
OHD1-75B	75°C ±5°C	10°C	Break	110 AC/DC	0.3 AC/DC	6 AC/DC	0.1 mA/1 VDC	150	1.4	UL & CSA & TÜV
OHD1-80B	80°C ±5°C	10°C	Break	110 AC/DC	0.3 AC/DC	6 AC/DC	0.1 mA/1 VDC	150	1.4	UL & CSA & TÜV
OHD1-85B	85°C ±5°C	10°C	Break	110 AC/DC	0.3 AC/DC	6 AC/DC	0.1 mA/1 VDC	150	1.4	UL & CSA & TÜV
OHD1-90B	90°C ±5°C	10°C	Break	110 AC/DC	0.3 AC/DC	6 AC/DC	0.1 mA/1 VDC	150	1.4	UL & CSA & TÜV
OHD1-95B	95°C ±5°C	10°C	Break	110 AC/DC	0.3 AC/DC	6 AC/DC	0.1 mA/1 VDC	150	1.4	UL & CSA & TÜV
OHD1-100B	100°C ±5°C	10°C	Break	110 AC/DC	0.3 AC/DC	6 AC/DC	0.1 mA/1 VDC	150	1.4	UL & CSA & TÜV
OHD1-105B	105°C ±5°C	10°C	Break	110 AC/DC	0.3 AC/DC	6 AC/DC	0.1 mA/1 VDC	150	1.4	UL & CSA & TÜV
OHD1-110B	110°C ±5°C	10°C	Break	110 AC/DC	0.3 AC/DC	6 AC/DC	0.1 mA/1 VDC	150	1.4	UL & CSA & TÜV
OHD1-115B	115°C ±5°C	10°C	Break	110 AC/DC	0.3 AC/DC	6 AC/DC	0.1 mA/1 VDC	150	1.4	UL & CSA & TÜV
OHD1-120B	120°C ±5°C	10°C	Break	110 AC/DC	0.3 AC/DC	6 AC/DC	0.1 mA/1 VDC	150	1.4	UL & CSA & TÜV
OHD1-125B	125°C ±5°C	10°C	Break	110 AC/DC	0.3 AC/DC	6 AC/DC	0.1 mA/1 VDC	150	1.4	UL & CSA & TÜV
OHD1-130B	130°C ±5°C	10°C	Break	110 AC/DC	0.3 AC/DC	6 AC/DC	0.1 mA/1 VDC	150	1.4	UL & CSA & TÜV
OHD3-30M	30°C ±5°C	10°C	Make	110 AC/DC	0.3 AC/DC	6 AC/DC	0.1 mA/1 VDC	150	2.8	UL & CSA & TÜV
OHD3-35M	35°C ±5°C	10°C	Make	110 AC/DC	0.3 AC/DC	6 AC/DC	0.1 mA/1 VDC	150	2.8	UL & CSA & TÜV
OHD3-40M	40°C ±5°C	10°C	Make	110 AC/DC	0.3 AC/DC	6 AC/DC	0.1 mA/1 VDC	150	2.8	UL & CSA & TÜV
OHD3-45M	45°C ±5°C	10°C	Make	110 AC/DC	0.3 AC/DC	6 AC/DC	0.1 mA/1 VDC	150	2.8	UL & CSA & TÜV
OHD3-50M	50°C ±5°C	10°C	Make	110 AC/DC	0.3 AC/DC	6 AC/DC	0.1 mA/1 VDC	150	2.8	UL & CSA & TÜV
OHD3-55M	55°C ±5°C	10°C	Make	110 AC/DC	0.3 AC/DC	6 AC/DC	0.1 mA/1 VDC	150	2.8	UL & CSA & TÜV
OHD3-60M	60°C ±5°C	10°C	Make	110 AC/DC	0.3 AC/DC	6 AC/DC	0.1 mA/1 VDC	150	2.8	UL & CSA & TÜV
OHD3-65M	65°C ±5°C	10°C	Make	110 AC/DC	0.3 AC/DC	6 AC/DC	0.1 mA/1 VDC	150	2.8	UL & CSA & TÜV
OHD3-70M	70°C ±5°C	10°C	Make	110 AC/DC	0.3 AC/DC	6 AC/DC	0.1 mA/1 VDC	150	2.8	UL & CSA & TÜV
OHD3-75M	75°C ±5°C	10°C	Make	110 AC/DC	0.3 AC/DC	6 AC/DC	0.1 mA/1 VDC	150	2.8	UL & CSA & TÜV
OHD3-80M	80°C ±5°C	10°C	Make	110 AC/DC	0.3 AC/DC	6 AC/DC	0.1 mA/1 VDC	150	2.8	UL & CSA & TÜV
OHD3-85M	85°C ±5°C	10°C	Make	110 AC/DC	0.3 AC/DC	6 AC/DC	0.1 mA/1 VDC	150	2.8	UL & CSA & TÜV
OHD3-90M	90°C ±5°C	10°C	Make	110 AC/DC	0.3 AC/DC	6 AC/DC	0.1 mA/1 VDC	150	2.8	UL & CSA & TÜV
OHD3-95M	95°C ±5°C	10°C	Make	110 AC/DC	0.3 AC/DC	6 AC/DC	0.1 mA/1 VDC	150	2.8	UL & CSA & TÜV
OHD3-100M	100°C ±5°C	10°C	Make	110 AC/DC	0.3 AC/DC	6 AC/DC	0.1 mA/1 VDC	150	2.8	UL & CSA & TÜV
OHD3-105M	105°C ±5°C	10°C	Make	110 AC/DC	0.3 AC/DC	6 AC/DC	0.1 mA/1 VDC	150	2.8	UL & CSA & TÜV
OHD3-110M	110°C ±5°C	10°C	Make	110 AC/DC	0.3 AC/DC	6 AC/DC	0.1 mA/1 VDC	150	2.8	UL & CSA & TÜV
OHD3-115M	115°C ±5°C	10°C	Make	110 AC/DC	0.3 AC/DC	6 AC/DC	0.1 mA/1 VDC	150	2.8	UL & CSA & TÜV
OHD3-120M	120°C ±5°C	10°C	Make	110 AC/DC	0.3 AC/DC	6 AC/DC	0.1 mA/1 VDC	150	2.8	UL & CSA & TÜV
OHD3-125M	125°C ±5°C	10°C	Make	110 AC/DC	0.3 AC/DC	6 AC/DC	0.1 mA/1 VDC	150	2.8	UL & CSA & TÜV
OHD3-130M	130°C ±5°C	10°C	Make	110 AC/DC	0.3 AC/DC	6 AC/DC	0.1 mA/1 VDC	150	2.8	UL & CSA & TÜV
OHD3-30B	30°C ±5°C	10°C	Break	110 AC/DC	0.3 AC/DC	6 AC/DC	0.1 mA/1 VDC	150	2.4	UL & CSA & TÜV
OHD3-35B	35°C ±5°C	10°C	Break	110 AC/DC	0.3 AC/DC	6 AC/DC	0.1 mA/1 VDC	150	2.4	UL & CSA & TÜV
OHD3-40B	40°C ±5°C	10°C	Break	110 AC/DC	0.3 AC/DC	6 AC/DC	0.1 mA/1 VDC	150	2.4	UL & CSA & TÜV
OHD3-45B	45°C ±5°C	10°C	Break	110 AC/DC	0.3 AC/DC	6 AC/DC	0.1 mA/1 VDC	150	2.4	UL & CSA & TÜV
OHD3-50B	50°C ±5°C	10°C	Break	110 AC/DC	0.3 AC/DC	6 AC/DC	0.1 mA/1 VDC	150	2.4	UL & CSA & TÜV
OHD3-55B	55°C ±5°C	10°C	Break	110 AC/DC	0.3 AC/DC	6 AC/DC	0.1 mA/1 VDC	150	2.4	UL & CSA & TÜV

Table 1 – Ratings & Part Number Reference cont.

Part Number	Switching Temperature (°C)	Maximum Differential Temperature (°C)	Contact Type	Maximum Opening/ Closing Voltage (V)	Maximum Opening/ Closing Current (A)	Maximum Opening/ Closing Power (W)	Minimum Opening/ Closing Current	Maximum Contact Resistance (mΩ)	Weight (g)	Approval
OHD3-60B	60°C ±5°C	10°C	Break	110 AC/DC	0.3 AC/DC	6 AC/DC	0.1 mA/1 VDC	150	2.4	UL & CSA & TÜV
OHD3-65B	65°C ±5°C	10°C	Break	110 AC/DC	0.3 AC/DC	6 AC/DC	0.1 mA/1 VDC	150	2.4	UL & CSA & TÜV
OHD3-70B	70°C ±5°C	10°C	Break	110 AC/DC	0.3 AC/DC	6 AC/DC	0.1 mA/1 VDC	150	2.4	UL & CSA & TÜV
OHD3-75B	75°C ±5°C	10°C	Break	110 AC/DC	0.3 AC/DC	6 AC/DC	0.1 mA/1 VDC	150	2.4	UL & CSA & TÜV
OHD3-80B	80°C ±5°C	10°C	Break	110 AC/DC	0.3 AC/DC	6 AC/DC	0.1 mA/1 VDC	150	2.4	UL & CSA & TÜV
OHD3-85B	85°C ±5°C	10°C	Break	110 AC/DC	0.3 AC/DC	6 AC/DC	0.1 mA/1 VDC	150	2.4	UL & CSA & TÜV
OHD3-90B	90°C ±5°C	10°C	Break	110 AC/DC	0.3 AC/DC	6 AC/DC	0.1 mA/1 VDC	150	2.4	UL & CSA & TÜV
OHD3-95B	95°C ±5°C	10°C	Break	110 AC/DC	0.3 AC/DC	6 AC/DC	0.1 mA/1 VDC	150	2.4	UL & CSA & TÜV
OHD3-100B	100°C ±5°C	10°C	Break	110 AC/DC	0.3 AC/DC	6 AC/DC	0.1 mA/1 VDC	150	2.4	UL & CSA & TÜV
OHD3-105B	105°C ±5°C	10°C	Break	110 AC/DC	0.3 AC/DC	6 AC/DC	0.1 mA/1 VDC	150	2.4	UL & CSA & TÜV
OHD3-110B	110°C ±5°C	10°C	Break	110 AC/DC	0.3 AC/DC	6 AC/DC	0.1 mA/1 VDC	150	2.4	UL & CSA & TÜV
OHD3-115B	115°C ±5°C	10°C	Break	110 AC/DC	0.3 AC/DC	6 AC/DC	0.1 mA/1 VDC	150	2.4	UL & CSA & TÜV
OHD3-120B	120°C ±5°C	10°C	Break	110 AC/DC	0.3 AC/DC	6 AC/DC	0.1 mA/1 VDC	150	2.4	UL & CSA & TÜV
OHD3-125B	125°C ±5°C	10°C	Break	110 AC/DC	0.3 AC/DC	6 AC/DC	0.1 mA/1 VDC	150	2.4	UL & CSA & TÜV
OHD3-130B	130°C ±5°C	10°C	Break	110 AC/DC	0.3 AC/DC	6 AC/DC	0.1 mA/1 VDC	150	2.4	UL & CSA & TÜV
OHD5R-30B	30°C ±5°C	10°C	Break	30 DC	0.1 DC	1 DC	0.1 mA/1 VDC	300	1.1	UL & CSA & TÜV
OHD5R-35B	35°C ±5°C	10°C	Break	30 DC	0.1 DC	1 DC	0.1 mA/1 VDC	300	1.1	UL & CSA & TÜV
OHD5R-40B	40°C ±5°C	10°C	Break	30 DC	0.1 DC	1 DC	0.1 mA/1 VDC	300	1.1	UL & CSA & TÜV
OHD5R-45B	45°C ±5°C	10°C	Break	30 DC	0.1 DC	1 DC	0.1 mA/1 VDC	300	1.1	UL & CSA & TÜV
OHD5R-50B	50°C ±5°C	10°C	Break	30 DC	0.1 DC	1 DC	0.1 mA/1 VDC	300	1.1	UL & CSA & TÜV
OHD5R-55B	55°C ±5°C	10°C	Break	30 DC	0.1 DC	1 DC	0.1 mA/1 VDC	300	1.1	UL & CSA & TÜV
OHD5R-60B	60°C ±5°C	10°C	Break	30 DC	0.1 DC	1 DC	0.1 mA/1 VDC	300	1.1	UL & CSA & TÜV
OHD5R-65B	65°C ±5°C	10°C	Break	30 DC	0.1 DC	1 DC	0.1 mA/1 VDC	300	1.1	UL & CSA & TÜV
OHD5R-70B	70°C ±5°C	10°C	Break	30 DC	0.1 DC	1 DC	0.1 mA/1 VDC	300	1.1	UL & CSA & TÜV
OHD5R-75B	75°C ±5°C	10°C	Break	30 DC	0.1 DC	1 DC	0.1 mA/1 VDC	300	1.1	UL & CSA & TÜV
OHD5R-80B	80°C ±5°C	10°C	Break	30 DC	0.1 DC	1 DC	0.1 mA/1 VDC	300	1.1	UL & CSA & TÜV
OHD5R-85B	85°C ±5°C	10°C	Break	30 DC	0.1 DC	1 DC	0.1 mA/1 VDC	300	1.1	UL & CSA & TÜV
OHD5R-90B	90°C ±5°C	10°C	Break	30 DC	0.1 DC	1 DC	0.1 mA/1 VDC	300	1.1	UL & CSA & TÜV
OHD5R-95B	95°C ±5°C	10°C	Break	30 DC	0.1 DC	1 DC	0.1 mA/1 VDC	300	1.1	UL & CSA & TÜV
OHD5R-100B	100°C ±5°C	10°C	Break	30 DC	0.1 DC	1 DC	0.1 mA/1 VDC	300	1.1	UL & CSA & TÜV
OHD5R-105B	105°C ±5°C	10°C	Break	30 DC	0.1 DC	1 DC	0.1 mA/1 VDC	300	1.1	UL & CSA & TÜV
OHD5R-110B	110°C ±5°C	10°C	Break	30 DC	0.1 DC	1 DC	0.1 mA/1 VDC	300	1.1	UL & CSA & TÜV
OHD5R-115B	115°C ±5°C	10°C	Break	30 DC	0.1 DC	1 DC	0.1 mA/1 VDC	300	1.1	UL & CSA & TÜV
OHD5R-120B	120°C ±5°C	10°C	Break	30 DC	0.1 DC	1 DC	0.1 mA/1 VDC	300	1.1	UL & CSA & TÜV
OHD5R-125B	125°C ±5°C	10°C	Break	30 DC	0.1 DC	1 DC	0.1 mA/1 VDC	300	1.1	UL & CSA & TÜV
OHD5R-130B	130°C ±5°C	10°C	Break	30 DC	0.1 DC	1 DC	0.1 mA/1 VDC	300	1.1	UL & CSA & TÜV

Table 2 – Ratings & Part Number Reference

Part Number	Weight (g)
OHD1BRACKET	0.45

© KEMET Electronics Corporation • KEMET Tower • One East Broward Boulevard
Fort Lauderdale, FL 33301 USA • 954-766-2800 • www.kemet.com

Soldering

OHD1 and OHD5R

Flow Soldering	Preheating Temperature	100 – 150°C
	Preheating Time	Within 60 seconds
	Heating Temperature	260°C
	Heating Time	10 ±1 seconds
Iron Soldering	Temperature of Tip	350°C or lower
	Worktime	Within 5 seconds

OHD3

Iron Soldering	Temperature of Tip	350°C or lower
	Worktime	Within 5 seconds

Marking

OHD1

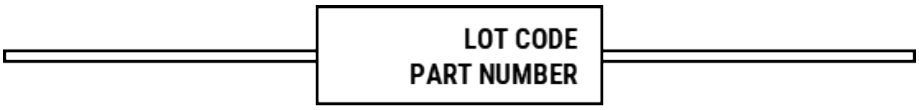

OHD3

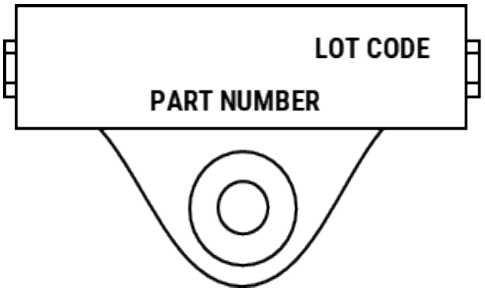

OHD5R

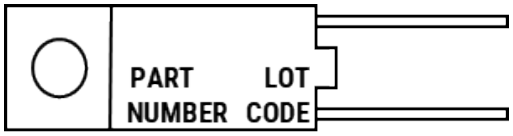

Lot Code 122		
Month of the Year	(1) 1 digit	1 = January 9 = September X = October Y = November Z = December
2 Last Digits of the Year	(2) 2 digits	10 = xx10 11 = xx11 19 = xx19

Packaging

Part Type	Packaging Type	Pieces per Tray	Pieces per Box
OHD1	Tray	120	1,200
OHD3		100	1,000
OHD5R			700
OHD1BRACKET	Plastic Bag	1,000	1,000

Handling Precautions

Precautions to be taken when using Thermal Reed Switches
(Please read these precautions before using our products)

- Do NOT use in close proximity to strong magnetic parts.
- Do NOT use product under mechanical weight load.
- Do NOT use if dropped or severely shocked.
- Do NOT use with a greater load than specified.
- Avoid stress (especially torsion) in case of additional processing.
- Thermal guards have a specific resonance frequency. Please contact a KEMET representative if an oscillation is added.
- OHD1 and OHD5R are designed for printed circuit board insertion. OHD3 is reed wire soldered type.

KEMET Electronics Corporation Sales Offices

For a complete list of our global sales offices, please visit www.kemet.com/sales.

Disclaimer

All product specifications, statements, information and data (collectively, the "Information") in this datasheet are subject to change. The customer is responsible for checking and verifying the extent to which the Information contained in this publication is applicable to an order at the time the order is placed. All Information given herein is believed to be accurate and reliable, but it is presented without guarantee, warranty, or responsibility of any kind, expressed or implied.

Statements of suitability for certain applications are based on KEMET Electronics Corporation's ("KEMET") knowledge of typical operating conditions for such applications, but are not intended to constitute – and KEMET specifically disclaims – any warranty concerning suitability for a specific customer application or use. The Information is intended for use only by customers who have the requisite experience and capability to determine the correct products for their application. Any technical advice inferred from this Information or otherwise provided by KEMET with reference to the use of KEMET's products is given gratis, and KEMET assumes no obligation or liability for the advice given or results obtained.

Although KEMET designs and manufactures its products to the most stringent quality and safety standards, given the current state of the art, isolated component failures may still occur. Accordingly, customer applications which require a high degree of reliability or safety should employ suitable designs or other safeguards (such as installation of protective circuitry or redundancies) in order to ensure that the failure of an electrical component does not result in a risk of personal injury or property damage.

Although all product–related warnings, cautions and notes must be observed, the customer should not assume that all safety measures are indicted or that other measures may not be required.

When providing KEMET products and technologies contained herein to other countries, the customer must abide by the procedures and provisions stipulated in all applicable export laws and regulations, including without limitation the International Traffic in Arms Regulations (ITAR), the US Export Administration Regulations (EAR) and the Japan Foreign Exchange and Foreign Trade Act.