## PHOTODIODE 100 mm$^2$ with Integrated Thin Film Filter — SXUV100TF135

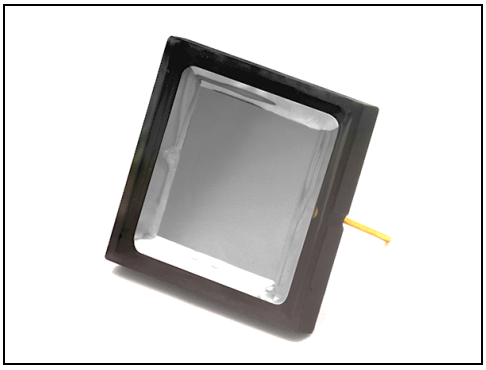

### FEATURES

- 100 mm$^2$ Square Active Area
- Responsivity @ 13.5 nm 0.09 A/W
- Detection Range 12 nm to 18 nm
- Shipped with Protective Cover

### ELECTRO-OPTICAL CHARACTERISTICS AT 25°C

| PARAMETERS | TEST CONDITIONS | MIN | TYP | MAX | UNITS |
|---|---|---|---|---|---|
| Active Area | 10 mm x 10 mm | | 100 | | mm$^2$ |
| Responsivity, $\mathcal{R}$ | @13.5 nm | .08 | .09 | 0.1 | A/W |
| Dark Current | $V_R$ = 15 V | | 8 | 25 | nA |
| Reverse Breakdown Voltage, $V_R$ | $1_R$ = 1 µA | 25 | | | Volts |
| Capacitance, C | $V_R$ = 0 V | 0.8 | 1.0 | 1.2 | nF |
| Capacitance, C | $V_R$ = 12 V | 220 | 260 | 350 | pF |
| Response Time, tr | RL = 50 Ω, $V_R$ = 12V | | 20 | | nsec |

### THERMAL PARAMETERS

| STORAGE AND OPERATION TEMPERATURE RANGE | |
|---|---|
| Ambient | –10° to 40°C |
| Nitrogen or Vacuum | –20°C to 80°C |
| Maximum Junction Temperature | 70°C |
| Lead Soldering Temperature[1] | 260°C |

[1]0.08" from case for 10 seconds.

*From Deep UV to Mid-IR*
OPTO DIODE
*An ITW Company*

1260 Calle Suerte, Camarillo, California 93012
Phone: (805) 499-0335, Fax: (805) 499-8108
Email: sales@optodiode.com, Website: www.optodiode.com

Revision January 8, 2018

## TYPICAL RESPONSIVITY at 25° C

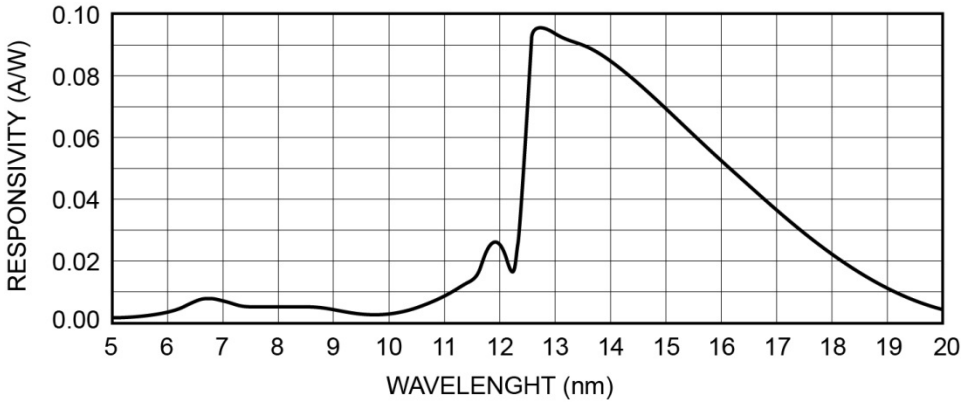


## PACKAGE INFORMATION

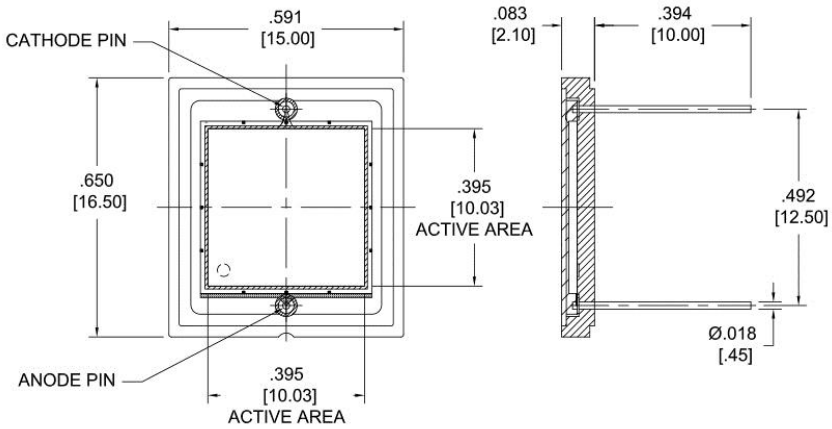


## ORDERING INFORMATION

ODD-SXU-003 Ceramic Carrier with Protective Cover in Black Plastic Container

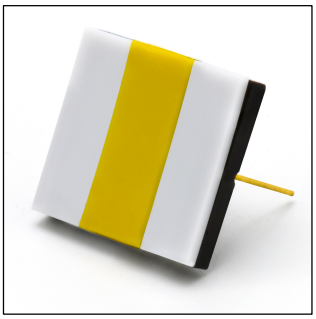

*From Deep UV to Mid-IR*
OPTO DIODE
*An ITW Company*

1260 Calle Suerte, Camarillo, California 93012
Phone: (805) 499-0335, Fax: (805) 499-8108
Email: sales@optodiode.com, Website: www.optodiode.com

Revision January 8, 2018