OD6020 Series

DC Fan - 12, 24V
60x20mm (2.36"x .79")



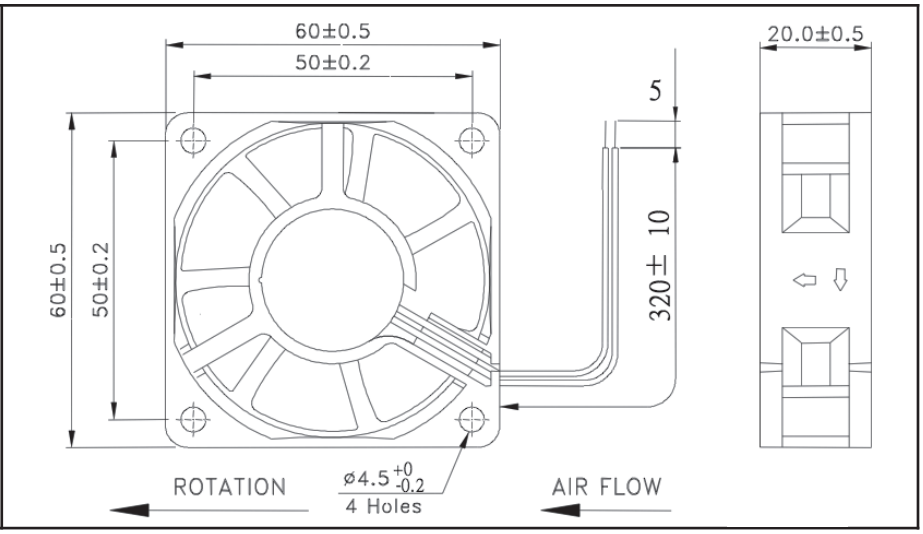

Frame & Impeller	PBT, UL94V-O plastic
Connection	2x Lead wires
Motor	Brushless DC, auto restart, impedance and polarity protected
Bearing System	Dual Ball or Sleeve
Insulation Resistance	10M ohm between leadwire and frame (500VDC)
Dielectric Strength	1 second at 500 VAC, max leakage - 500 MicroAmp
Storage Temperature	-30C ~ +90C

Available Options:
Tachometer
Alarm
Other frame styles available
5V available on request

Life Expectancy (L10)
Ball Bearing
60,000 hours (L10 at 40C)
Sleeve Bearing
30,000 hours (L10 at 40C)

Operating Temperature
Ball Bearing
-20C ~ +80C
Sleeve Bearing
-10C ~ +50C

m1

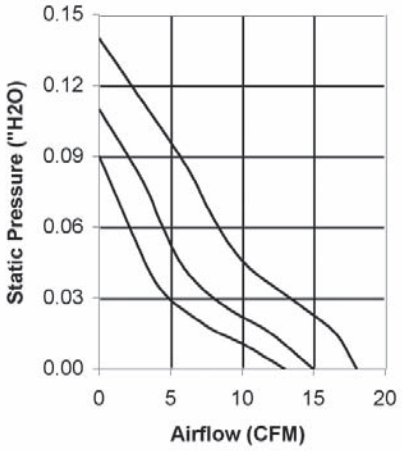

Model Number	Speed (RPM)	Airflow (CFM)	Noise (dB)	Volts DC	Voltage Range	Amps	Max. Static Pressure ("H2O)
OD6020-12H*	4500	18	30	12	8~16	.16	.14
OD6020-12M*	3900	15	26	12	8~16	.13	.11
OD6020-12L*	3500	13	22	12	8~16	.08	.09
OD6020-24H*	4500	18	30	24	12~32	.09	.14
OD6020-24M*	3900	15	26	24	12~32	.06	.11
OD6020-24L*	3500	13	22	24	12~32	.04	.09

* Indicate "B" to specify Ball bearing or "S" to specify Sleeve bearing