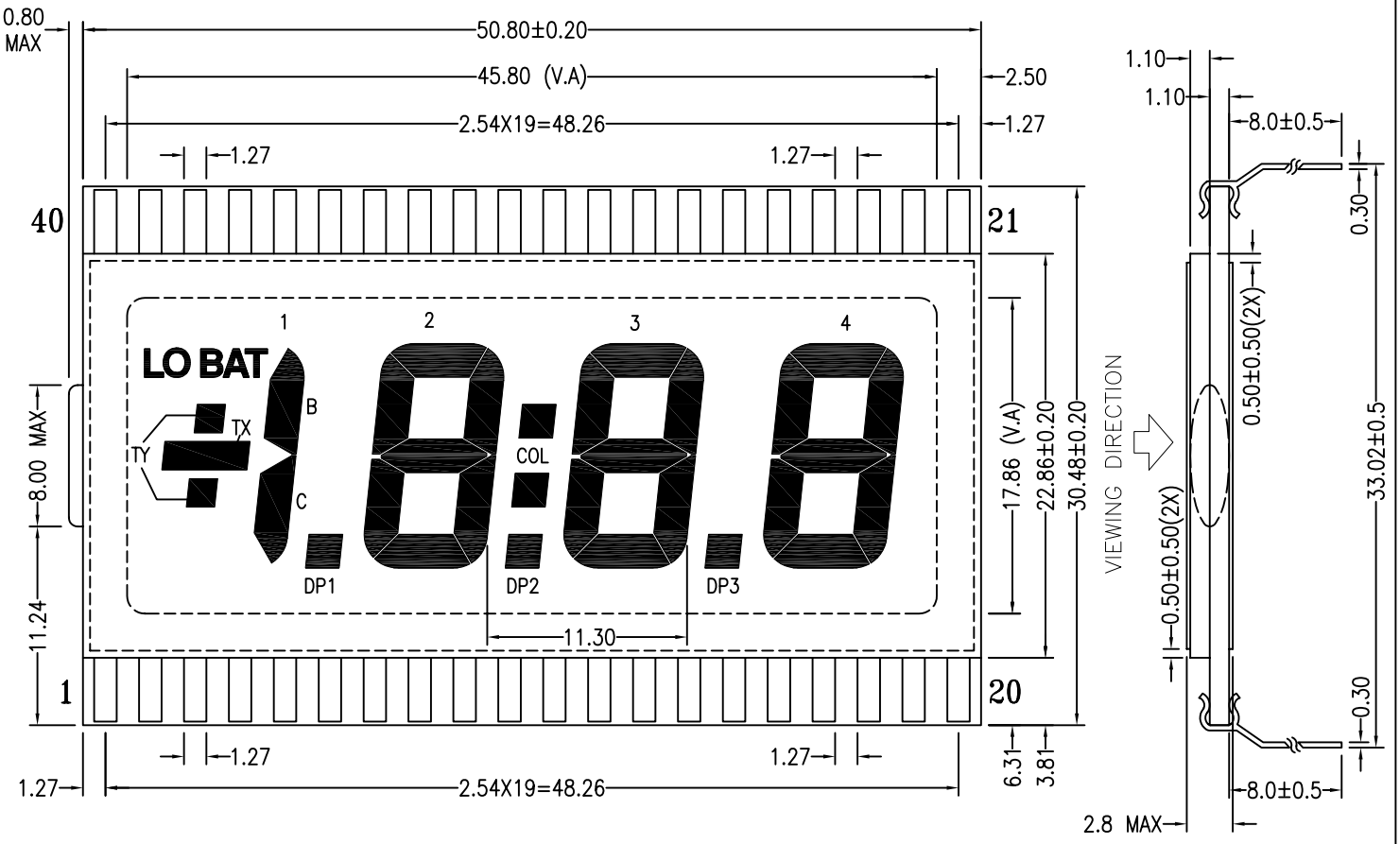

PIN	SEG	PIN	SEG	PIN	SEG	PIN	SEG
1	BP	11	2C	21	4A	31	2F
2	TX	12	DP2	22	4F	32	2G
3	1BC	13	3E	23	4G	33	
4		14	3D	24	3B	34	
5		15	3C	25	3A	35	
6		16	DP3	26	3F	36	
7		17	4E	27	3G	37	
8	DP1	18	4D	28	COL	38	LO BAT
9	2E	19	4C	29	2B	39	TY
10	2D	20	4B	30	2A	40	BP

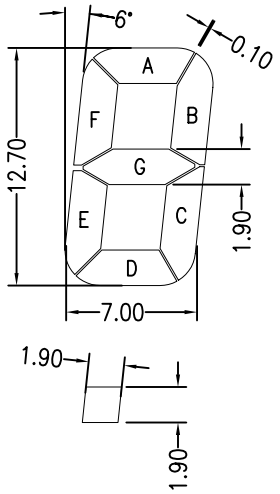

NOTES:

1. DISPLAY TYPE: TN
2. VIEWING DIRECTION: 6:00
3. POLARIZER MODE: POSITIVE/REFLECTIVE
4. DRIVER METHOD: STATIC
5. OPERATING VOLTAGE: 5.0 V
6. OPERATING TEMP: -20~70°C
7. STORAGE TEMP: -30~80°C
8. CONNECTOR: PIN

ORIENT DISPLAY	DRAWN: Wang	CHECKED:	APP:	LCD NO.:	DATE: 08/03/04	UNITS: MM
				DWG NO.:OD-358		SHEET 1 OF 1