OCXO - OC22T5S SERIES

SC-Cut Crystal - Square Wave - 5.0 Volts

- **Frequency Range 5.0MHz to 20.0MHz**
- **50.8 x 50.8 x 16.0mm 7 pin metal, solder-sealed package**
- **Supply Voltage 5.0 Volts**
- **SC-Cut Crystal**
- **Squarewave Output**
- **EFC (Voltage control) as standard**

DESCRIPTION

OC22T5S series oven-controlled crystal oscillators are close tolerance OCXOs with excellent phase noise performance.

SPECIFICATION

Crystal Cut:	SC-cut
Output Waveform:	Square Wave
Supply Voltage:	+5.0 VDC ±0.2V
Frequency Range:	5.0MHz to 20.0MHz
Initial Calibration Tolerance:	±0.1ppm max.(at Vcon +2.5V)
Frequency Stability	
over 0° to +60°C:	±0.01ppm
over -20° to +70°C:	±0.02ppm
over -40° to +85°C:	±0.03ppm
vs. Voltage Change:	<±1.0ppb for ±5% change
vs. Ageing:	±0.5ppb max per day ±50ppb per first year ±150ppb over 10 years
vs. Load Change:	<±1.0ppb for ±5% change
Warm-up Time:	5 minutes max. to within ±10ppb of nominal freq.
Voltage Control	
Control Voltage Centre:	+2.5 Volts (Vcon)
Freq. Deviation Range:	±0.5ppm min., ±1ppm max. ref. to 25°C and O.T.R.
Control Voltage Range:	2.5V ±2.0Volts
Transfer Function:	Positive: Increasing control voltage increases output frequency
Input Impedance:	100kΩ minimum
EFC Linearity:	±10% maximum
Power Dissipation:	2.0W max. steady state 6.0W max. at turn on
Output	
Load:	15pF HCMOS
Output Logic HIGH:	+4.5V minimum
Output Logic LOW:	0.5V maximum
Duty Cycle:	50%±10%
Rise/Fall Time:	5ns max (20%~80%) *Frequency dependant*
Reference Voltage:	+4.0±0.3VDC or custom
Envionmental	
Storage Temperature:	-55° to +125°C
Shock:	2000g, 0.3ms ½ sine
Vibration:	10 ~2000Hz / 10g

PHASE NOISE (at 10MHz)

Offset	dBc/Hz
1Hz	-85
10Hz	-120
100Hz	-140
1kHz	-145
10kHz	-150

OUTLINE & DIMENSIONS

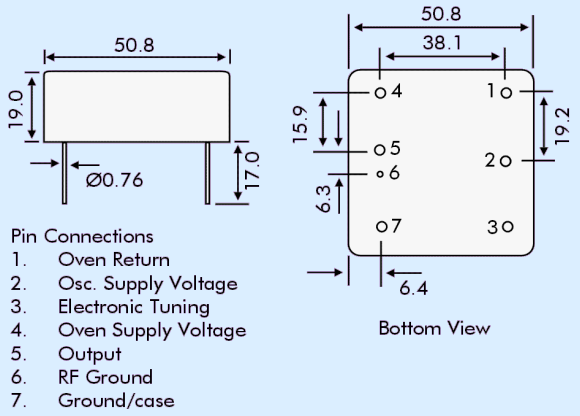

TEST CIRCUIT

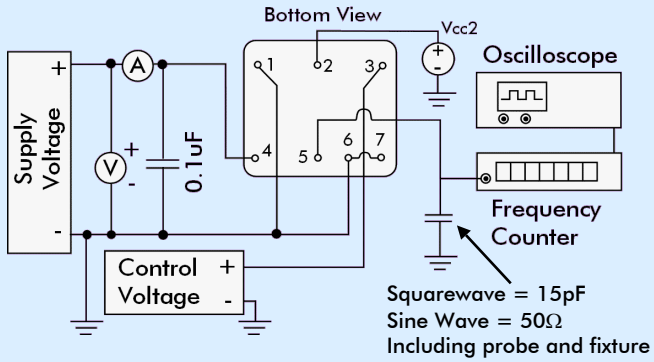

PART NUMBER FORMAT

Example: **OC22GT5S-10.000-0.01/-20+70**

OCXO Package: OC22
RoHS Compliance
G: RoHS Compliant
Blank: Non-compliant
T: Output Squarewave
5: Supply Voltage 5.0Volts
S: SC-Cut Crystal
Nominal Frequency 10.0MHz
Stability in ±ppm
Operating Temperature Range °C
Lowest Temperature/Highest Temperature

EUROQUARTZ LIMITED Blacknell Lane CREWKERNE Somerset UK TA18 7HE
Tel: +44 (0)1460 230000 Fax: +44 (0)1460 230001 Email: info@euroquartz.co.uk www.euroquartz.co.uk