OCXO (Oven Controlled Crystal Oscillators) +12.0 V
OC14T12A, OC14T12GA (RoHS version) HCMOS Square

MERCURY Since 1973

- Full size 4 pin DIP full metal package
- +12.0 V D.C supply Voltage
- 15 pF load HCMOS square wave output
- AT-cut crystal
- Voltage control (Electronic Frequency Tuning) on pin 1

RoHS Compliant Product by Mercury



General Specifications (10 MHz at+25°C, at +12.0 V Vcc and +2.5 V Vcon)

Output Wave Form			HCMOS Square Wave. Wave form code is "**T**"			
Frequency Range			10 MHz ~40.0 MHz.			
Type of Crystal Cut Used			**AT**-cut. Use "**A**" for crystal code.			
Supply Voltage (Vcc)			+12.0 V ±0.5 V (voltage code is "**12**")			
Initial Calibration Tolerance			±0.5 ppm max. at the time of shipment. Vcon=+2.5V			
Frequency Stability vs	**Operating Temperature Range (custom spec. on request)**		Operating Temperature	0°C to +60°C	-20°C to +70°C	-40°C to +85°C
			Best Stability Available	±0.05 ppm	±0.1 ppm	±0.2 ppm
			Typical Stability	±0.20 ppm	±0.30 ppm	±0.50 ppm
	Aging		< ±0.7 ppm first year. < ±4.0 ppm over 10 years.			
	Short Term Stability		<1 E $^{-10}$ (0.1 sec to 30 sec.); typical 5 E $^{-11}$ at 1 sec.			
	Supply Voltage ±0.5V Variation		< ±0.1 ppm	**Load ±5% variation**	< ±0.01 ppm	
	Warm-up time (at +25°C)		3 minutes max. Within ±0.1 ppm of its reference frequency.			
Voltage Control on pin 1 (EFC) (Electronics Frequency Tuning)		**Freq. Deviation Range**	±4 ppm min. Referenced to fo at +25°C			
		Control Voltage Range	0.0 V to 5.0 V			
		Transfer Function	Positive: Increasing control voltage increases output frequency.			
		Input Impedance	47 K ohms min.			
		EFC Linearity	±10% max.			
Power	**Power Dissipation (at +25°C)**		1 W max. at steady-state; 2 W max. at turn-on.			
Output	**Load (Fan Out)**		10 LS			
	Duty Cycle (measured at 1/2Vcc)		50% ±10%			
	Output Voltage Logic High (V_{OH})		+4.5 V min			
	Output Voltage Logic Low (V_{OL})		+0.4 V max.			
	Rise and Fall Time		7 nS max. (measured at 20% ⇄ 80% of waveform.)			
	Phase Noise	**Offset**	1 Hz	10 Hz	100 Hz	1 KHz	10 KHz
		10 MHz at static condition	-60 dBc	-90 dBc	-120 dBc	-130 dBc	-140 dBc
Storage Temperature			-65°C to +125°C			
Shock			2000 G's, 0.3 ms ½ sine			
Vibration			10 to 2000 Hz / 10 G's			

MERCURY www.mercury-crystal.com

Taiwan: TEL (886)-2-2406-2779, FAX (886)-2-2496-0769, e-mail: sales-tw@mercury-crystal.com

U.S.A.: TEL (1)-909-466-0427, FAX (1)-909-466-0762, e-mail: sales-us@mercury-crystal.com

OC14T12A Test Circuit:

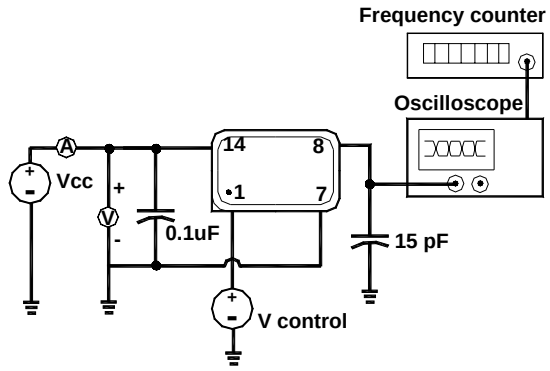

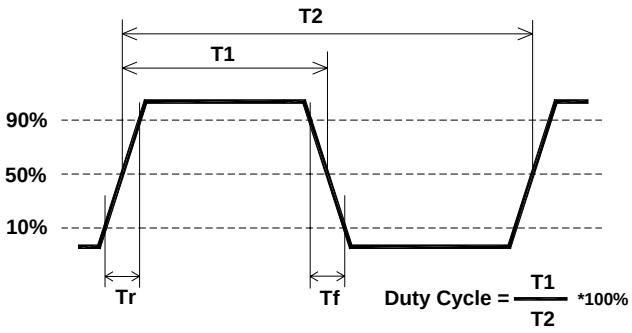

OC14T12A Package Dimensions and Pin Connections:

unit mm [inches]
Square corner is pin No. 1

Pin 1: Voltage Control (EFC) Pin 7: Ground / Case
Pin 8: RF Output Pin 14: Supply Voltage

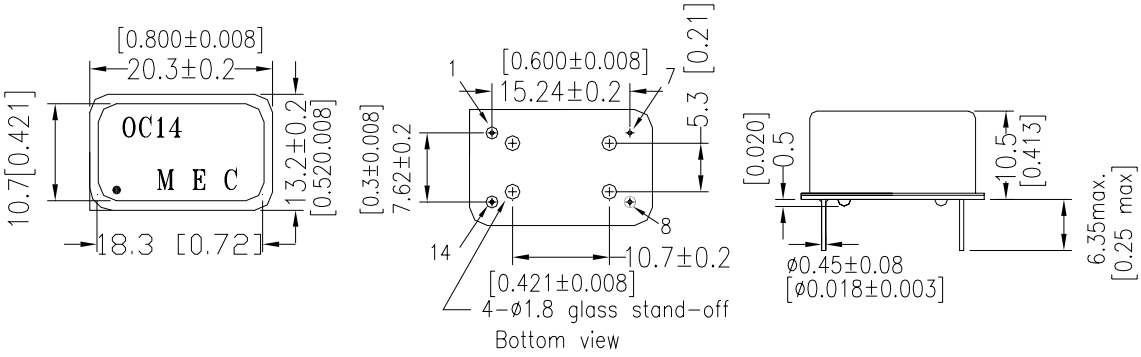

Part Number Format and Example:

Example: OC14T12GA-10.000-0.1/-20+70											
OC	14	T	12	G	A	—	10.000	—	0.1	/	-20+70
❶	❷	❸	❹	❺	❻	dash	❼	dash	❽	slash	❾

❶: "**OC**" Product Prefix for OCXO ❷: Package type. "**14**" for 4 pin DIP.

❸: Output wave form code. "**T**" for HCMOS square wave.

❹: Supply voltage code. "**12**" for +12.0;

❺: "**G**" for RoHS compliant equivalent," "(blank) for non-RoHS part.

❻: Crystal type. "**A**" for AT-cut crystal;

❼: Frequency in MHz; ❽: Frequency stability in ppm;

❾: Operating temperature range: -20°C to +70°C in this case.