



Model Number

OBR1500-R3F-E0-L

Laser retroreflective sensor
with 2 m fixed cable

Features

- Very flat design for direct mounting without mounting bracket
- DuraBeam Laser Sensors - durable and employable like an LED
- Glare protected with polarization filter
- Very bright, highly visible light spot

Dimensions

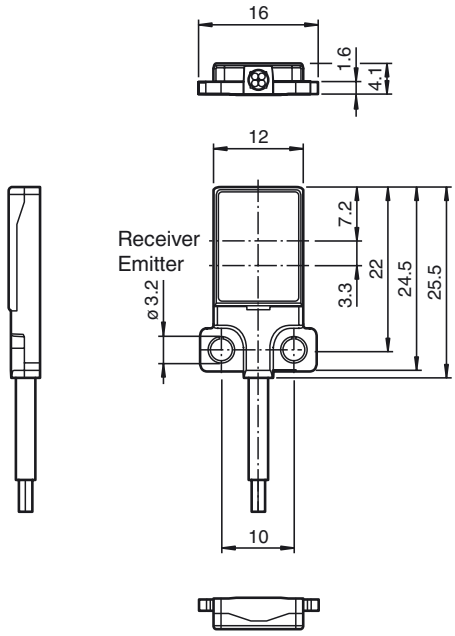

Electrical connection

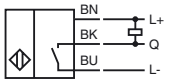

Release date: 2019-10-29 09:49 Date of issue: 2019-10-29 263499_eng.xml

Technical data

General specifications		
Effective detection range		0 ... 1500 mm
Reflector distance		60 ... 1500 mm
Threshold detection range		1800 mm
Reference target		H40 reflector
Light source		LASER LIGHT
Light type		modulated visible red light , 680 nm
Polarization filter		yes
Laser nominal ratings		
Note		LASER LIGHT , DO NOT STARE INTO BEAM
Laser class		1
Wave length		680 nm
Beam divergence		> 5 mrad
Pulse length		approx. 3 µs
Repetition rate		approx. 16.6 kHz
max. pulse energy		8 nJ
Angle deviation		approx. 0.5 °
Object size		typ. starts from 1.5 mm
Diameter of the light spot		approx. 25 mm at a distance of 1500 mm
Angle of divergence		approx. 1 °
Optical face		frontal
Ambient light limit		EN 60947-5-2 : 30000 Lux
Functional safety related parameters		
$MTTF_d$		800 a
Mission Time (T_M)		20 a
Diagnostic Coverage (DC)		0 %
Indicators/operating means		
Operation indicator		LED green, statically lit Power on , short-circuit : LED green flashing (approx. 4 Hz)
Function indicator		Receiver: LED yellow, lights up when light beam is free, flashes when falling short of the stability control ; OFF when light beam is interrupted
Electrical specifications		
Operating voltage	U_B	12 ... 24 V
No-load supply current	I_0	< 10 mA
Protection class		III
Output		
Switching type		NO contact / dark on
Signal output		1 NPN output, short-circuit protected, reverse polarity protected, open collector
Switching voltage		max. 30 V DC
Switching current		max. 50 mA , resistive load
Voltage drop	U_d	≤ 1.5 V DC
Switching frequency	f	approx. 2 kHz
Response time		250 µs
Conformity		
Product standard		EN 60947-5-2
Laser safety		EN 60825-1:2007
Ambient conditions		
Ambient temperature		-10 ... 60 °C (14 ... 140 °F)
Storage temperature		-20 ... 70 °C (-4 ... 158 °F)
Mechanical specifications		
Housing width		16 mm
Housing height		25.5 mm
Housing depth		4.1 mm
Degree of protection		IP67
Connection		2 m fixed cable
Material		
Housing		PC (Polycarbonate) and Stainless steel
Optical face		PMMA
Cable		PUR
Mass		approx. 20 g
Tightening torque, fastening screws		1 Nm
Cable length		2 m

Approvals and certificates	
UL approval	E87056 , cULus Recognized, Class 2 Power Source
CCC approval	CCC approval / marking not required for products rated ≤36 V
FDA approval	IEC 60825-1:2007 Complies with 21 CFR 1040.10 and 1040.11 except for deviations pursuant to Laser Notice No. 50, dated June 24, 2007

Laserlabel





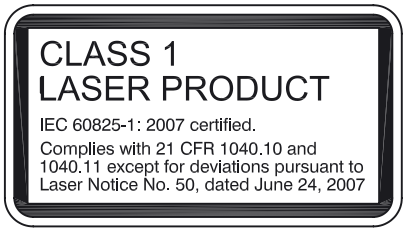

Accessories

REF-H40
Reflector, rectangular 47.5 mm x 23.5 mm, mounting holes, fixing strap

REF-H23
Reflector with mounting holes

REF-MH20
Reflector with Micro-structure, rectangular 32 mm x 20 mm, mounting holes

REF-MH23
Reflector with Micro-structure, rectangular 23 mm x 13.8 mm, diagonal mounting hole

Other suitable accessories can be found at www.pepperl-fuchs.com

Release date: 2019-10-29 09:49 Date of issue: 2019-10-29 263499_eng.xml

Curves/Diagrams

Characteristic response curve

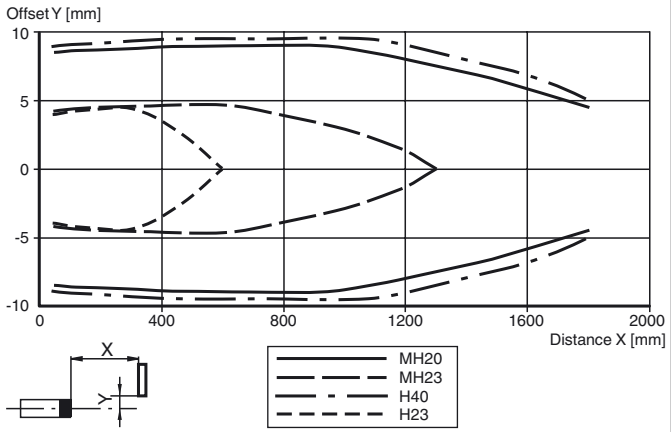

Relative received light strength

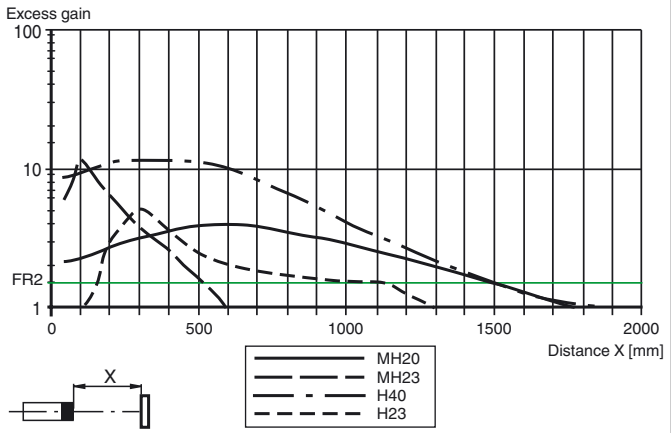

Light spot diameter

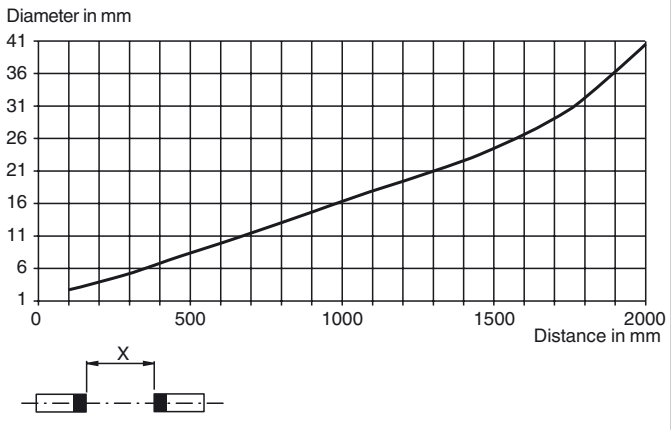

Laser notice laser class 1

- The irradiation can lead to irritation especially in a dark environment. Do not point at people!
- Maintenance and repairs should only be carried out by authorized service personnel!
- Attach the device so that the warning is clearly visible and readable.
- The warning accompanies the device and should be attached in immediate proximity to the device.
- Caution – Use of controls or adjustments or performance of procedures other than those specified herein may result in hazardous radiation exposure.

Release date: 2019-10-29 09:49 Date of issue: 2019-10-29 263499_eng.xml