OA180ANL Metal Series

AC - Harsh Environment
180 x 65mm (7.1” x 2.56”)



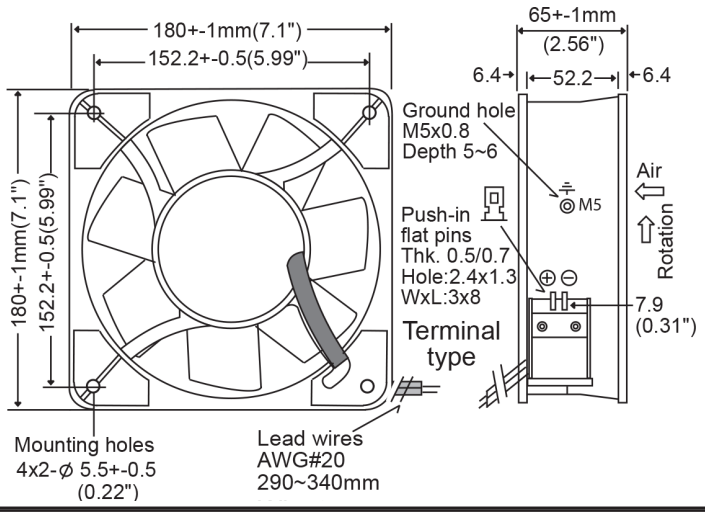

Frame	Aluminum Die-cast	Notes
Impeller	Metal alloy	Date: 050113
Connection *	Lead wires or Terminal	Environmental Protection: IP56
Motor	AC Shaded pole, Thermal protection	Storage Temp: -40C ~ +100C
Bearing System	Dual Ball bearing	Weight: 1700g (3.75 lbs)
Insulation Resistance	>100MOhm at 500VDC	Available AC voltages by special order: 12, 24, 28, 38, 42, 48, 440, 480. Dual speed also available. Call for information.
Dielectric Strength	> 60 seconds at 1500VAC	
Operating Temp Range	-30C ~ +80C (non-condensing)	* Specify configuration: TB = Terminal, Ball bearing WB = Wire leads, Ball bearing
Life Expectancy	50000 hours (55C)	

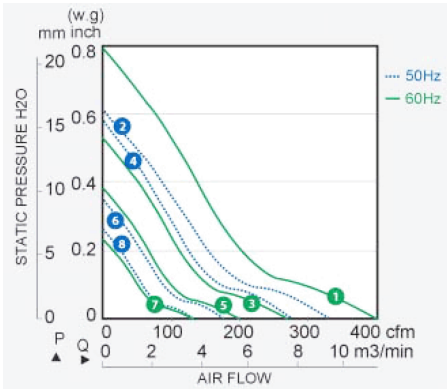

Model No.	Speed (RPM)	Airflow (CFM)	Noise	Volts AC	Voltage Range AC	Watts	Max. Static Pressure (“H_2O)	Curves
OA180ANL-11-1 * 1856	2750 3250	330 400	65	115	100 ~ 120	60 80	0.60 0.80	2 (50Hz) 1 (60Hz)
OA180ANL-11-2 * 1856	2300 2200	275 265	53	115	100 ~ 120	55 65	0.58 0.52	4 (50Hz) 3 (60Hz)
OA180ANL-11-3 * 1856	1500 1600	185 200	42	115	100 ~ 120	20 30	0.38 0.32	6 (50Hz) 5 (60Hz)
OA180ANL-22-1 * 1856	2750 3250	330 400	65	230	200 ~ 240	60 80	0.60 0.80	2 (50Hz) 1 (60Hz)
OA180ANL-22-2 * 1856	2300 2200	275 265	53	230	200 ~ 240	55 65	0.58 0.52	4 (50Hz) 3 (60Hz)
OA180ANL-22-3 * 1856	1500 1600	185 200	42	230	200 ~ 240	20 30	0.38 0.32	6 (50Hz) 5 (60Hz)

Knight Electronics, Inc
10557 Metric Dr.
Dallas, Texas 75243
214-340-0265

RoHS Compliant

OrionFans.com
Information and data
is subject to change without
prior notification