2.5V/3.3V LVPECL XO

NX702

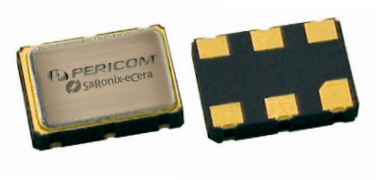

7.0 x 5.0mm Ceramic SMD

Product Features

- Very low phase jitter - < 1.0ps RMS max.
- Wide frequency range - 5 ~ 1000MHz
- Thicker crystal for improved reliability
- Low supply current - 80mA max.
- Industrial Temperature Range
- Pb-free & RoHS compliant
- Fast lead time

Product Description

The NX702 XO series is a high performance LVPECL crystal oscillator family with very low jitter performance. It supports various options including wider frequency range, 2.5V/3.3V voltage, and various stabilities. It is designed to meet the clock source specifications for communication systems, and other high performance equipment.

Applications

- Networking systems
- Servers and storage systems
- Profession video equipments
- Test and measurement
- FPGA/ASIC clock generation

Package: (Scale: none, Dimensions are in mm)

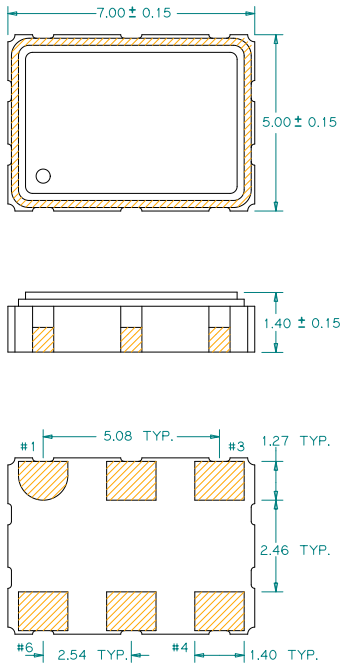

Recommended Land Pattern:

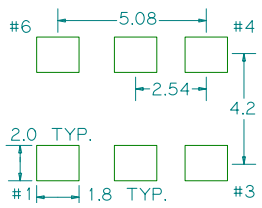

Pin Functions:

Pin	Function
1	OE Function
2	N/C
3	Ground
4	Q
5	$\overline{Q}$
6	V_{CC}

*Extended high frequency power decoupling is recommended (see test circuit for minimum recommendation). To ensure optimal performance, do not route RF traces beneath the package.

Part Ordering Information:

NX 702 V 1 FFFF.FFFFFF

Voltage:
1=+3.3V
2=+2.5V

Stability and Temp Range:

Stability	Temp Range
A = +/-20 ppm	-20/+70°C
B = +/-25 ppm	-20/+70°C
C = +/-50 ppm	-20/+70°C
D = +/-25 ppm	-40/+85°C
E = +/-50 ppm	-40/+85°C

Frequency:
FFFF.FFFFFF
MHz, "4 digits/decimal/6 digits" format

Electrical Performance

Parameter		Min.	Typ.	Max.	Units	Notes
Output Frequency		5		1000	MHz	
Supply Voltage		3.135	3.3	3.465	V	See ordering options
		2.375	2.5	2.625		
Supply Current, Output Enabled				80	mA	
Supply Current, Output Disabled only				40	mA	
Frequency Stability				±50	ppm	See ordering options
Operating Temperature Range		-40		+85	°C	See ordering options
Output Logic 0, V_{OL}				V_{CC}-1.55	V	
Output Logic 1, V_{OH}		V_{CC}-1.2			V	
Output Load		50Ω to V_{CC} -2V output termination				
Duty Cycle		45		55	%	Measured 50% V_{CC}
Rise and Fall Time				400	ps	Measured 20/80% of waveform
Jitter, Accumulated , RMS (1-σ)				6	ps	20.000 adjacent periods
Jitter, Phase, RMS	< 40MHz		0.4	1	ps	12kHz to 5 MHz frequency band
	40 to 1000MHz		0.4	1	ps	12kHz to 20 MHz frequency band
	125MHz, 156.25MHz		0.4	0.6	ps	12kHz to 20 MHz frequency band
Jitter, pk-pk				40	ps	100,000 random periods

Notes:
1. Stability includes all combinations of operating temperature, load changes, rated input (supply) voltage changes, initial calibration tolerance (25°C), aging (1 year at 25°C average effective ambient temperature), shock and vibration.
2. Phase jitter typical value is depending on output frequencies.
3. For specifications other than those listed, please contact sales.

Output Enable / Disable Function

Parameter	Min.	Typ.	Max.	Units	Notes
Input Voltage (pin 1), Output Enable	0.7 V_{CC}			V	or open
Input Voltage (pin 1), Output Disable (low power standby)			0.3 V_{CC}	V	Output is Hi-Z
Output Disable Delay			100	ns	
Output Enable Delay			100	ns	
Start up Time			10	ms	

Absolute Maximum Ratings

Parameter	Min.	Typ.	Max.	Units	Notes
Storage Temperature	-55		+125	°C	

For the latest product information visit: http://www.pericom.com/products/crystals-and-crystal-oscillators/hiflex-xo/?part=NX702

For test circuit go to: http://www.pericom.com/pdf/sre/tc_pecl.pdf

For soldering reflow profile and reliability test ratings go to: http://www.pericom.com/pdf/sre/reflow.pdf

For tape and reel information go to: http://www.pericom.com/pdf/sre/tr_7050_xo.pdf