NTP082N65S3F

MOSFET – Power, N-Channel, SUPERFET III, FRFET

650 V, 40 A, 82 mΩ

Description

SUPERFET III MOSFET is ON Semiconductor's brand−new high voltage super−junction (SJ) MOSFET family that is utilizing charge balance technology for outstanding low on−resistance and lower gate charge performance. This advanced technology is tailored to minimize conduction loss, provide superior switching performance, and withstand extreme dv/dt rate.

Consequently, SUPERFET III MOSFET is very suitable for the various power system for miniaturization and higher efficiency.

SUPERFET III FRFET MOSFET's optimized reverse recovery performance of body diode can remove additional component and improve system reliability.

Features

- 700 V @ T_J = 150°C
- Typ. $R_{DS(on)}$ = 70 mΩ
- Ultra Low Gate Charge (Typ. Q_g = 81 nC)
- Low Effective Output Capacitance (Typ. $C_{oss(eff.)}$ = 722 pF)
- 100% Avalanche Tested
- These Devices are Pb−Free and are RoHS Compliant

Applications

- Telecom / Server Power Supplies
- Industrial Power Supplies
- EV Charger
- UPS / Solar

ON Semiconductor®

www.onsemi.com

V_{DSS}	$R_{DS(ON)}$ MAX	I_D MAX
650 V	82 mΩ @ 10 V	40 A

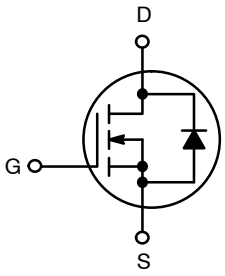

POWER MOSFET

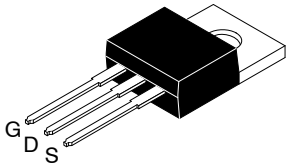

TO−220
CASE 340AT

MARKING DIAGRAM

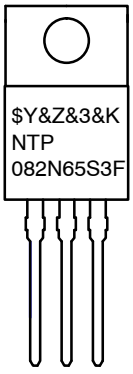

$Y	= ON Semiconductor Logo
&Z	= Assembly Plant Code
&3	= Data Code (Year & Week)
&K	= Lot
NTP082N65S3F	= Specific Device Code

ORDERING INFORMATION

See detailed ordering and shipping information on page 2 of this data sheet.

© Semiconductor Components Industries, LLC, 2017

ABSOLUTE MAXIMUM RATINGS (T_C = 25°C, Unless otherwise noted)

Symbol	Parameter		NTP082N65S3F	Unit
V_{DSS}	Drain to Source Voltage		650	V
V_{GSS}	Gate to Source Voltage	– DC	±30	V
		– AC (f > 1 Hz)	±30	
I_D	Drain Current	– Continuous (T_C = 25°C)	40	A
		– Continuous (T_C = 100°C)	25.5	
I_{DM}	Drain Current	– Pulsed (Note 1)	100	A
E_{AS}	Single Pulsed Avalanche Energy (Note 2)		510	mJ
I_{AS}	Avalanche Current (Note 2)		4.8	A
E_{AR}	Repetitive Avalanche Energy (Note 1)		3.13	mJ
dv/dt	MOSFET dv/dt		100	V/ns
	Peak Diode Recovery dv/dt (Note 3)		50	
P_D	Power Dissipation	(T_C = 25°C)	313	W
		– Derate Above 25°C	2.5	W/°C
T_J, T_{STG}	Operating and Storage Temperature Range		–55 to +150	°C
T_L	Maximum Lead Temperature for Soldering, 1/8″ from Case for 5 seconds		300	°C

Stresses exceeding those listed in the Maximum Ratings table may damage the device. If any of these limits are exceeded, device functionality should not be assumed, damage may occur and reliability may be affected.

1. Repetitive rating: pulse−width limited by maximum junction temperature.
2. I_{AS} = 4.8 A, R_G = 25 Ω, starting T_J = 25°C.
3. $I_{SD} \le$ 20 A, di/dt ≤ 200 A/μs, $V_{DD} \le$ 400 V, starting T_J = 25°C.

THERMAL CHARACTERISTICS

Symbol	Parameter	NTP082N65S3F	Unit
$R_{\theta JC}$	Thermal Resistance, Junction to Case, Max.	0.4	°C/W
$R_{\theta JA}$	Thermal Resistance, Junction to Ambient, Max.	62.5	

PACKAGE MARKING AND ORDERING INFORMATION

Part Number	Top Marking	Package	Packing Method	Reel Size	Tape Width	Quantity
NTP082N65S3F	NTP082N65S3F	TO−220	Tube	N/A	N/A	50 Units

ELECTRICAL CHARACTERISTICS (T_C = 25°C unless otherwise noted)

Symbol	Parameter	Test Conditions	Min.	Typ.	Max.	Unit
OFF CHARACTERISTICS						
BV_{DSS}	Drain to Source Breakdown Voltage	V_{GS} = 0 V, I_D = 1 mA, T_J = 25°C	650	–	–	V
		V_{GS} = 0 V, I_D = 1 mA, T_J = 150°C	700	–	–	V
ΔBV_{DSS} / ΔT_J	Breakdown Voltage Temperature Coefficient	I_D = 10 mA, Referenced to 25°C	–	0.7	–	V/°C
I_{DSS}	Zero Gate Voltage Drain Current	V_{DS} = 650 V, V_{GS} = 0 V	–	–	10	μA
		V_{DS} = 520 V, T_C = 125°C	–	124	–	
I_{GSS}	Gate to Body Leakage Current	V_{GS} = ±30 V, V_{DS} = 0 V	–	–	±100	nA
ON CHARACTERISTICS						
$V_{GS(th)}$	Gate Threshold Voltage	V_{GS} = V_{DS}, I_D = 1.0 mA	3.0	–	5.0	V
$R_{DS(on)}$	Static Drain to Source On Resistance	V_{GS} = 10 V, I_D = 20 A	–	70	82	mΩ
g_{FS}	Forward Transconductance	V_{DS} = 20 V, I_D = 20 A	–	24	–	S
DYNAMIC CHARACTERISTICS						
C_{iss}	Input Capacitance	V_{DS} = 400 V, V_{GS} = 0 V, f = 1 MHz	–	3410	–	pF
C_{oss}	Output Capacitance		–	70	–	pF
$C_{oss(eff.)}$	Effective Output Capacitance	V_{DS} = 0 V to 400 V, V_{GS} = 0 V	–	722	–	pF
$C_{oss(er.)}$	Energy Related Output Capacitance	V_{DS} = 0 V to 400 V, V_{GS} = 0 V	–	126	–	pF
$Q_{g(tot)}$	Total Gate Charge at 10 V	V_{DS} = 400 V, I_D = 20 A, V_{GS} = 10 V (Note 4)	–	81	–	nC
Q_{gs}	Gate to Source Gate Charge		–	24	–	nC
Q_{gd}	Gate to Drain “Miller” Charge		–	32	–	nC
ESR	Equivalent Series Resistance	f = 1 MHz	–	1.9	–	Ω
SWITCHING CHARACTERISTICS						
$t_{d(on)}$	Turn-On Delay Time	V_{DD} = 400 V, I_D = 20 A, V_{GS} = 10 V R_g = 3 Ω (Note 4)	–	27	–	ns
t_r	Turn-On Rise Time		–	27	–	ns
$t_{d(off)}$	Turn-Off Delay Time		–	79	–	ns
t_f	Turn-Off Fall Time		–	5	–	ns
SOURCE-DRAIN DIODE CHARACTERISTICS						
I_S	Maximum Continuous Source to Drain Diode Forward Current		–	–	40	A
I_{SM}	Maximum Pulsed Source to Drain Diode Forward Current		–	–	100	A
V_{SD}	Source to Drain Diode Forward Voltage	V_{GS} = 0 V, I_{SD} = 20 A	–	–	1.3	V
t_{rr}	Reverse Recovery Time	V_{GS} = 0 V, I_{SD} = 20 A, dI_F/dt = 100 A/μs	–	108	–	ns
Q_{rr}	Reverse Recovery Charge		–	410	–	nC

Product parametric performance is indicated in the Electrical Characteristics for the listed test conditions, unless otherwise noted. Product performance may not be indicated by the Electrical Characteristics if operated under different conditions.

4. Essentially independent of operating temperature typical characteristics.

TYPICAL PERFORMANCE CHARACTERISTICS

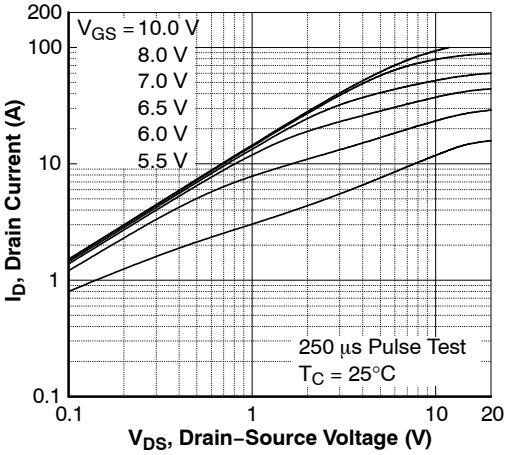

Figure 1. On−Region Characteristics

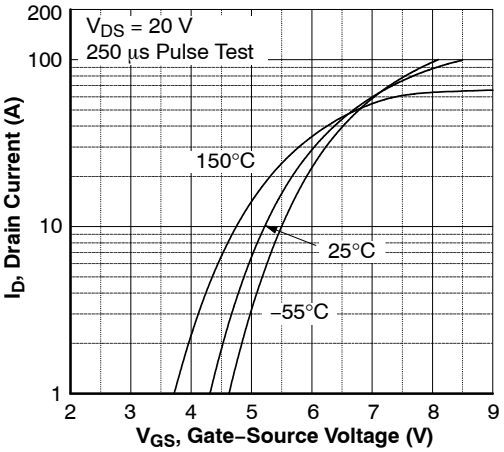

Figure 2. Transfer Characteristics

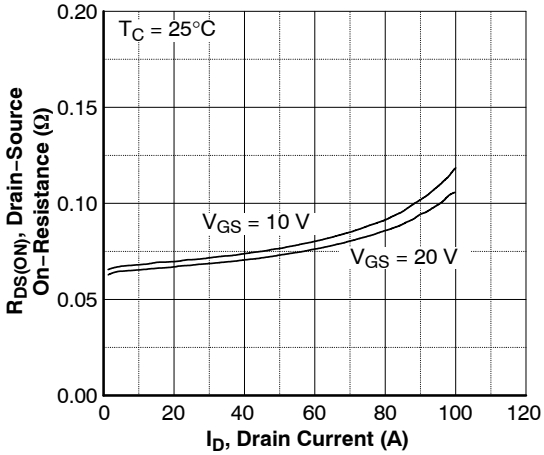

Figure 3. On−Resistance Variation vs. Drain Current and Gate Voltage

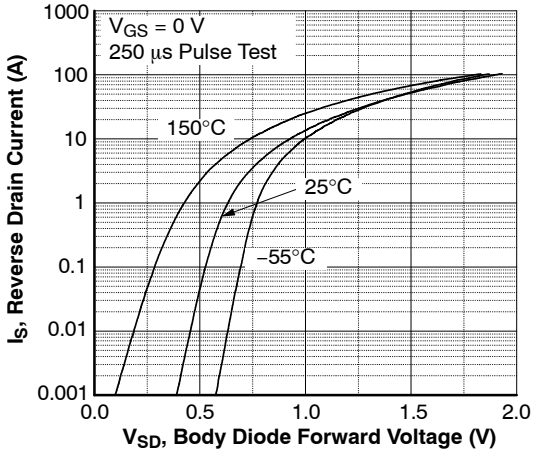

Figure 4. Body Diode Forward Voltage Variation vs. Source Current and Temperature

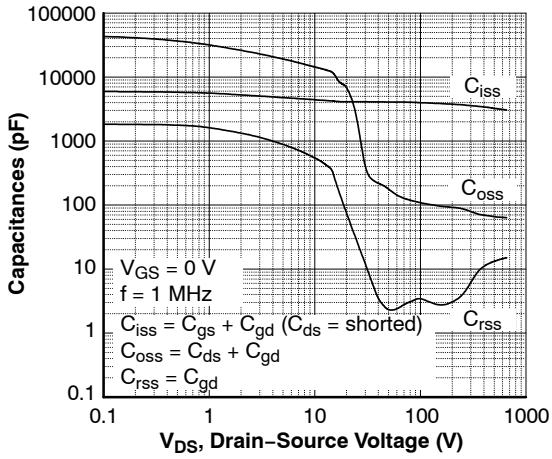

Figure 5. Capacitance Characteristics

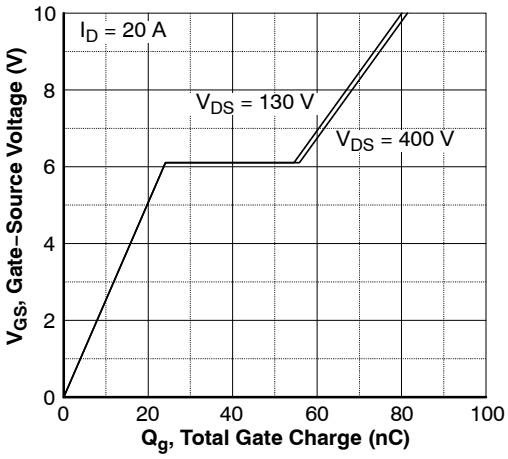

Figure 6. Gate Charge Characteristics

TYPICAL PERFORMANCE CHARACTERISTICS (continued)

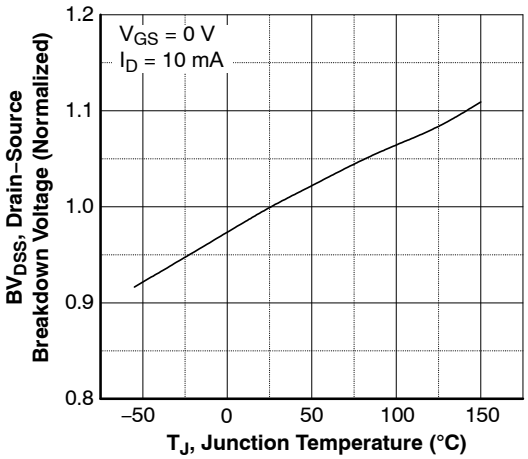

Figure 7. Breakdown Voltage Variation vs. Temperature

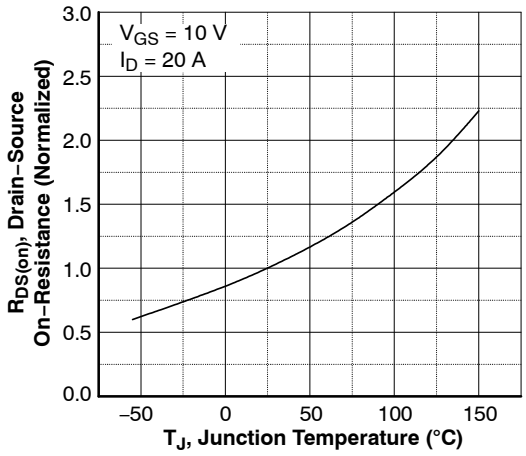

Figure 8. On−Resistance Variation vs. Temperature

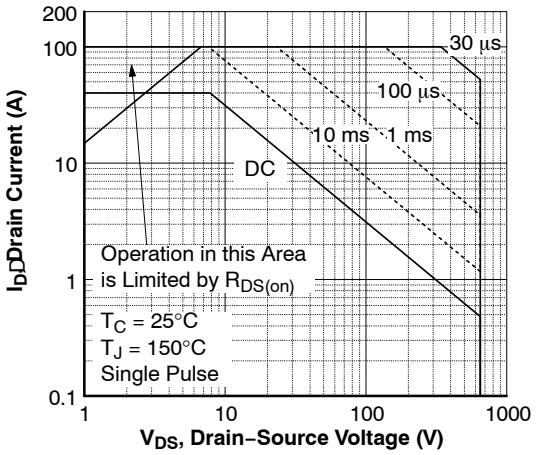

Figure 9. Maximum Safe Operating Area

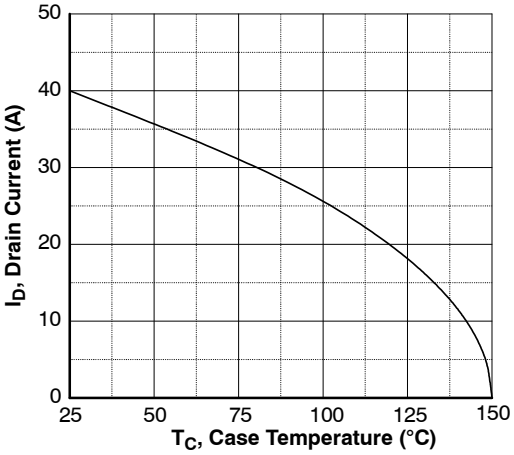

Figure 10. Maximum Drain Current vs. Case Temperature

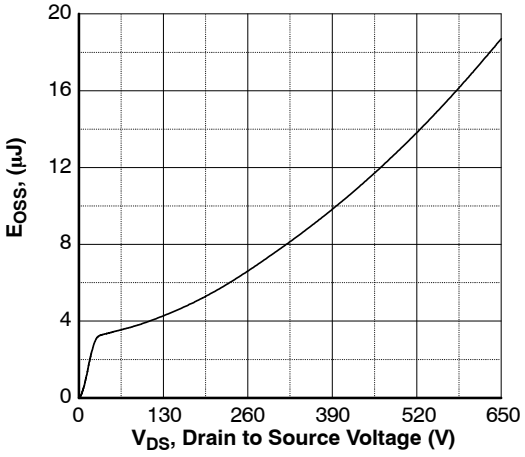

Figure 11. E_{OSS} vs. Drain to Source Voltage

TYPICAL PERFORMANCE CHARACTERISTICS (continued)

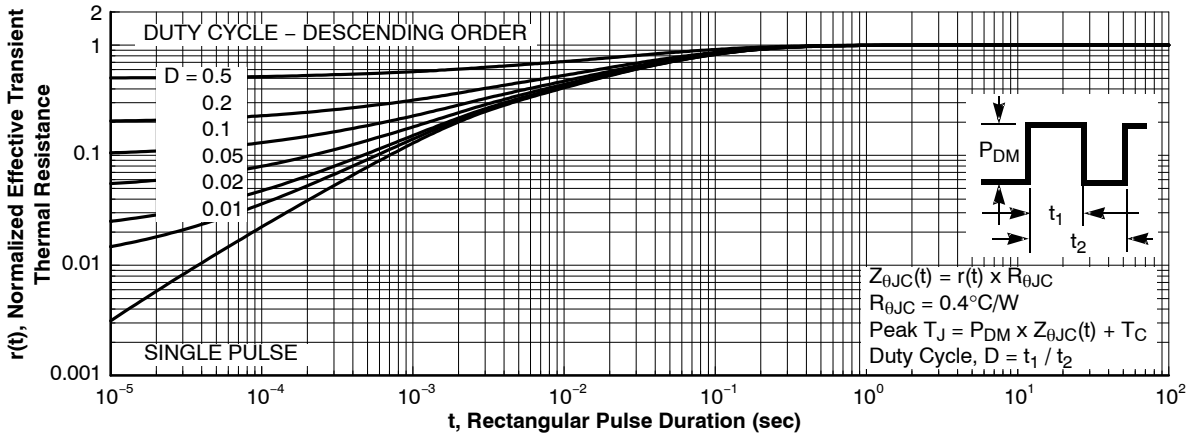

Figure 12. Transient Thermal Response Curve

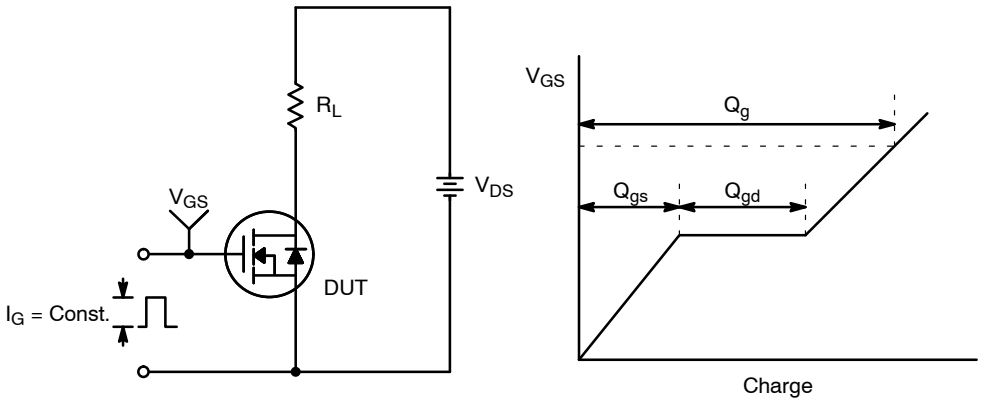

Figure 13. Gate Charge Test Circuit & Waveform

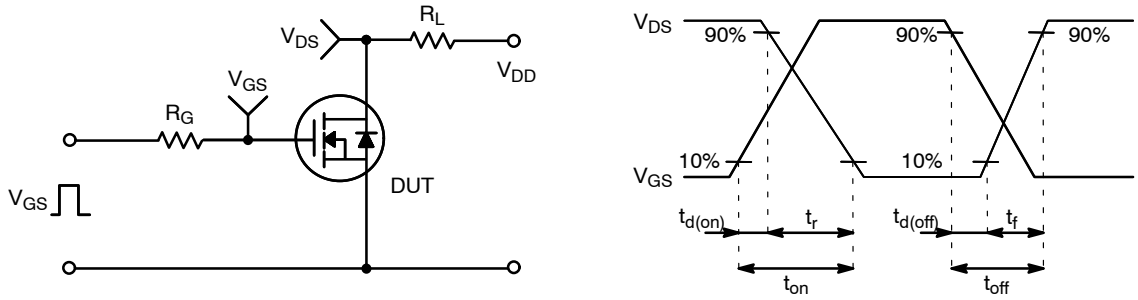

Figure 14. Resistive Switching Test Circuit & Waveforms

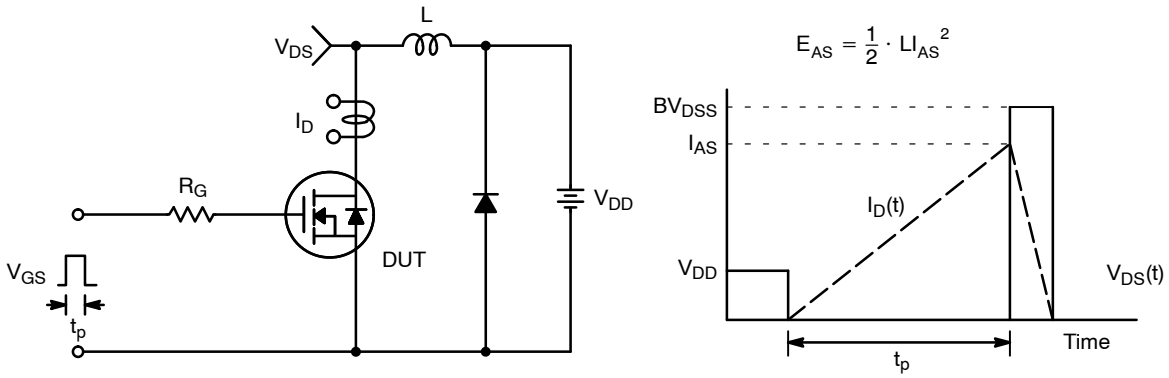

Figure 15. Unclamped Inductive Switching Test Circuit & Waveforms

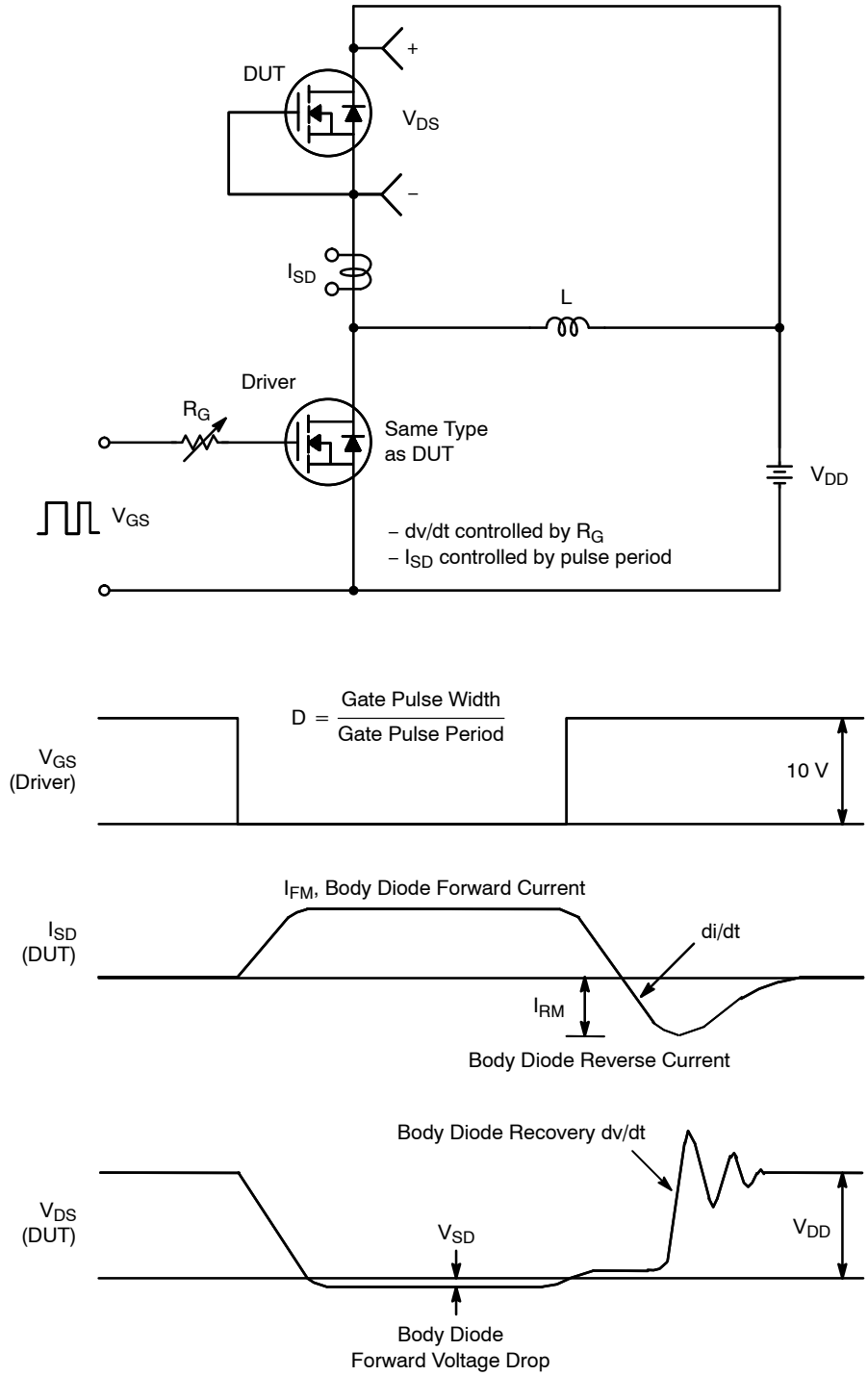

Figure 16. Peak Diode Recovery dv/dt Test Circuit & Waveforms

SUPERFET and FRFET are a registered trademarks of Semiconductor Components Industries, LLC (SCILLC) or its subsidiaries in the United States and/or other countries.

MECHANICAL CASE OUTLINE
PACKAGE DIMENSIONS

ON Semiconductor®

TO−220−3LD
CASE 340AT
ISSUE A

DATE 03 OCT 2017

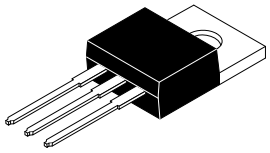

Scale 1:1

NOTES:
A) REFERENCE JEDEC, TO-220, VARIATION AB
B) ALL DIMENSIONS ARE IN MILLIMETERS.
C) DIMENSIONS COMMON TO ALL PACKAGE SUPPLIERS EXCEPT WHERE NOTED [ ].
D) LOCATION OF MOLDED FEATURE MAY VARY (LOWER LEFT CORNER, LOWER CENTER AND CENTER OF THE PACKAGE)
E DOES NOT COMPLY JEDEC STANDARD VALUE.
F) "A1" DIMENSIONS AS BELOW:
SINGLE GAUGE = 0.51 - 0.61
DUAL GAUGE = 1.10 - 1.45
G PRESENCE IS SUPPLIER DEPENDENT
H) SUPPLIER DEPENDENT MOLD LOCKING HOLES IN HEATSINK.

DOCUMENT NUMBER:	**98AON13818G**	Electronic versions are uncontrolled except when accessed directly from the Document Repository. Printed versions are uncontrolled except when stamped "CONTROLLED COPY" in red.
DESCRIPTION:	**TO−220−3LD**	**PAGE 1 OF 1**

ON Semiconductor and ON are trademarks of Semiconductor Components Industries, LLC dba ON Semiconductor or its subsidiaries in the United States and/or other countries. ON Semiconductor reserves the right to make changes without further notice to any products herein. ON Semiconductor makes no warranty, representation or guarantee regarding the suitability of its products for any particular purpose, nor does ON Semiconductor assume any liability arising out of the application or use of any product or circuit, and specifically disclaims any and all liability, including without limitation special, consequential or incidental damages. ON Semiconductor does not convey any license under its patent rights nor the rights of others.

ON Semiconductor and ON are trademarks of Semiconductor Components Industries, LLC dba ON Semiconductor or its subsidiaries in the United States and/or other countries. ON Semiconductor owns the rights to a number of patents, trademarks, copyrights, trade secrets, and other intellectual property. A listing of ON Semiconductor's product/patent coverage may be accessed at www.onsemi.com/site/pdf/Patent−Marking.pdf. ON Semiconductor reserves the right to make changes without further notice to any products herein. ON Semiconductor makes no warranty, representation or guarantee regarding the suitability of its products for any particular purpose, nor does ON Semiconductor assume any liability arising out of the application or use of any product or circuit, and specifically disclaims any and all liability, including without limitation special, consequential or incidental damages. Buyer is responsible for its products and applications using ON Semiconductor products, including compliance with all laws, regulations and safety requirements or standards, regardless of any support or applications information provided by ON Semiconductor. "Typical" parameters which may be provided in ON Semiconductor data sheets and/or specifications can and do vary in different applications and actual performance may vary over time. All operating parameters, including "Typicals" must be validated for each customer application by customer's technical experts. ON Semiconductor does not convey any license under its patent rights nor the rights of others. ON Semiconductor products are not designed, intended, or authorized for use as a critical component in life support systems or any FDA Class 3 medical devices or medical devices with a same or similar classification in a foreign jurisdiction or any devices intended for implantation in the human body. Should Buyer purchase or use ON Semiconductor products for any such unintended or unauthorized application, Buyer shall indemnify and hold ON Semiconductor and its officers, employees, subsidiaries, affiliates, and distributors harmless against all claims, costs, damages, and expenses, and reasonable attorney fees arising out of, directly or indirectly, any claim of personal injury or death associated with such unintended or unauthorized use, even if such claim alleges that ON Semiconductor was negligent regarding the design or manufacture of the part. ON Semiconductor is an Equal Opportunity/Affirmative Action Employer. This literature is subject to all applicable copyright laws and is not for resale in any manner.

PUBLICATION ORDERING INFORMATION

LITERATURE FULFILLMENT:
Email Requests to: orderlit@onsemi.com

ON Semiconductor Website: www.onsemi.com

TECHNICAL SUPPORT
North American Technical Support:
Voice Mail: 1 800−282−9855 Toll Free USA/Canada
Phone: 011 421 33 790 2910

Europe, Middle East and Africa Technical Support:
Phone: 00421 33 790 2910
For additional information, please contact your local Sales Representative

◊