MOSFET - Power, DUAL COOL® N-Channel DFN8 5x6

60 V, 1.5 mΩ, 235 A

NTMFSC1D6N06CL

ON Semiconductor®

www.onsemi.com

Features

- Advanced Dual−sided Cooled Packaging
- Ulra Low $R_{DS(on)}$
- MSL1 Robust Packaging Design

Typical Applications

- Orring FET/Load Switching
- Synchronous Rectifier
- DC−DC Conversion

$V_{(BR)DSS}$	$R_{DS(ON)}$ MAX	I_D MAX
60 V	1.5 mΩ @ 10 V	235 A
	2.3 mΩ @ 4.5 V	

N−Channel MOSFET

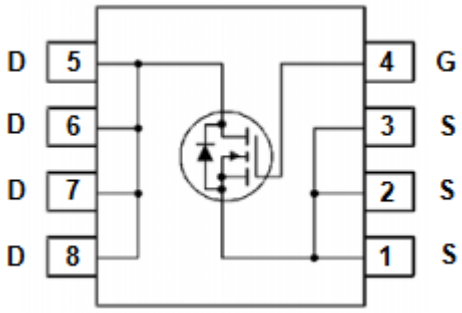

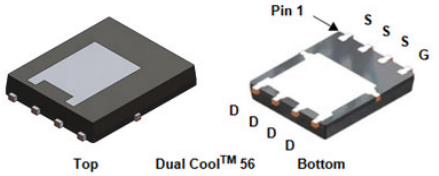

DFN8 5x6
CASE 506EG

MAXIMUM RATINGS (T_J = 25°C unless otherwise noted)

Parameter			Symbol	Value	Unit
Drain−to−Source Voltage			V_{DSS}	60	V
Gate−to−Source Voltage			V_{GS}	±20	V
Continuous Drain Current $R_{\theta JC}$ (Note 2)	Steady State	T_C = 25°C	I_D	235	A
Power Dissipation $R_{\theta JC}$ (Note 2)			P_D	166	W
Continuous Drain Current $R_{\theta JA}$ (Notes 1, 2)	Steady State	T_A = 25°C	I_D	36	A
Power Dissipation $R_{\theta JA}$ (Notes 1, 2)			P_D	3.8	W
Pulsed Drain Current	T_A = 25°C, t_p = 10 μs		I_{DM}	900	A
Operating Junction and Storage Temperature Range			T_J, T_{stg}	−55 to +175	°C
Source Current (Body Diode)			I_S	164	A
Single Pulse Drain−to−Source Avalanche Energy ($I_{L(pk)}$ = 17 A)			E_{AS}	451	mJ
Lead Temperature Soldering Reflow for Soldering Purposes (1/8″ from case for 10 s)			T_L	300	°C

Stresses exceeding those listed in the Maximum Ratings table may damage the device. If any of these limits are exceeded, device functionality should not be assumed, damage may occur and reliability may be affected.

THERMAL RESISTANCE MAXIMUM RATINGS

Parameter	Symbol	Value	Unit
Junction−to−Case − Steady State (Note 2)	$R_{\theta JC}$	0.9	°C/W
Junction−to−Ambient − Steady State (Note 2)	$R_{\theta JA}$	39	

1. Surface−mounted on FR4 board using a 1 in^2 pad size, 1 oz Cu pad.
2. The entire application environment impacts the thermal resistance values shown, they are not constants and are only valid for the particular conditions noted.

MARKING DIAGRAM



612LDC = Specific Device Code
A = Assembly Location
Y = Year
W = Work Week
ZZ = Lot Traceability

ORDERING INFORMATION

See detailed ordering and shipping information on page 5 of this data sheet.

© Semiconductor Components Industries, LLC, 2018

ELECTRICAL CHARACTERISTICS (T_J = 25°C unless otherwise specified)

Parameter	Symbol	Test Condition		Min	Typ	Max	Unit
OFF CHARACTERISTICS							
Drain−to−Source Breakdown Voltage	$V_{(BR)DSS}$	V_{GS} = 0 V, I_D = 250 μA		60			V
Drain−to−Source Breakdown Voltage Temperature Coefficient	$V_{(BR)DSS}/T_J$	I_D = 250 μA, ref to 25°C			12.7		mV/°C
Zero Gate Voltage Drain Current	I_{DSS}	V_{GS} = 0 V, V_{DS} = 60 V	T_J = 25°C			10	μA
			T_J = 125°C			100	
Gate−to−Source Leakage Current	I_{GSS}	V_{DS} = 0 V, V_{GS} = 20 V				100	nA
ON CHARACTERISTICS (Note 3)							
Gate Threshold Voltage	$V_{GS(TH)}$	V_{GS} = V_{DS}, I_D = 250 μA		1.2		2.0	V
Negative Threshold Temperature Coefficient	$V_{GS(TH)}/T_J$	I_D = 250 μA, ref to 25°C			−5.8		mV/°C
Drain−to−Source On Resistance	$R_{DS(on)}$	V_{GS} = 10 V	I_D = 50 A		1.25	1.5	mΩ
		V_{GS} = 4.5 V	I_D = 50 A		1.65	2.3	
Gate−Resistance	R_G	T_A = 25°C			2		Ω
CHARGES & CAPACITANCES							
Input Capacitance	C_{ISS}	V_{GS} = 0 V, f = 1 MHz, V_{DS} = 25 V			6660		pF
Output Capacitance	C_{OSS}				3000		
Reverse Transfer Capacitance	C_{RSS}				45		
Total Gate Charge	$Q_{G(TOT)}$	V_{GS} = 4.5 V, V_{DS} = 30 V, I_D = 50 A			41		nC
Total Gate Charge	$Q_{G(TOT)}$	V_{GS} = 10 V, V_{DS} = 30 V, I_D = 50 A			91		
Gate−to−Source Charge	Q_{GS}				17		
Gate−to−Drain Charge	Q_{GD}				9		
Plateau Voltage	V_{GP}				2.9		V
SWITCHING CHARACTERISTICS (Note 3)							
Turn−On Delay Time	$t_{d(ON)}$	V_{GS} = 10 V, V_{DS} = 48 V, I_D = 50 A, R_G = 1 Ω			14.5		ns
Rise Time	t_r				55.6		
Turn−Off Delay Time	$t_{d(OFF)}$				47.5		
Fall Time	t_f				14.1		
DRAIN−SOURCE DIODE CHARACTERISTICS							
Forward Diode Voltage	V_{SD}	V_{GS} = 0 V, I_S = 50 A	T_J = 25°C		0.78	1.2	V
			T_J = 125°C		0.66		
Reverse Recovery Time	t_{RR}	V_{GS} = 0 V, dI_S/dt = 100 A/μs, I_S = 50 A			76		ns
Reverse Recovery Charge	Q_{RR}				130		nC

Product parametric performance is indicated in the Electrical Characteristics for the listed test conditions, unless otherwise noted. Product performance may not be indicated by the Electrical Characteristics if operated under different conditions.

3. Switching characteristics are independent of operating junction temperatures.

TYPICAL CHARACTERISTICS

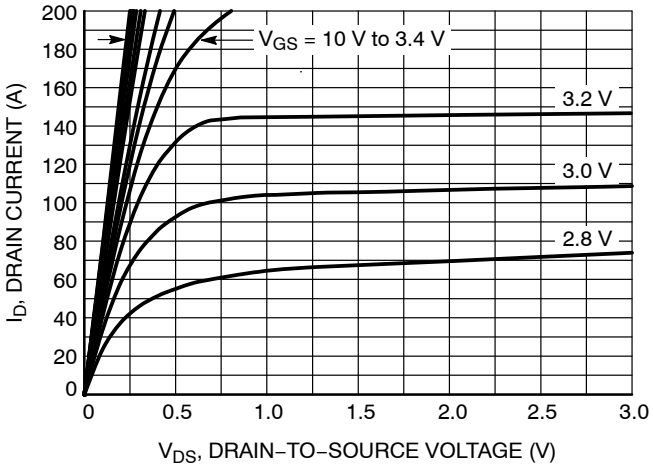

Figure 1. On−Region Characteristics

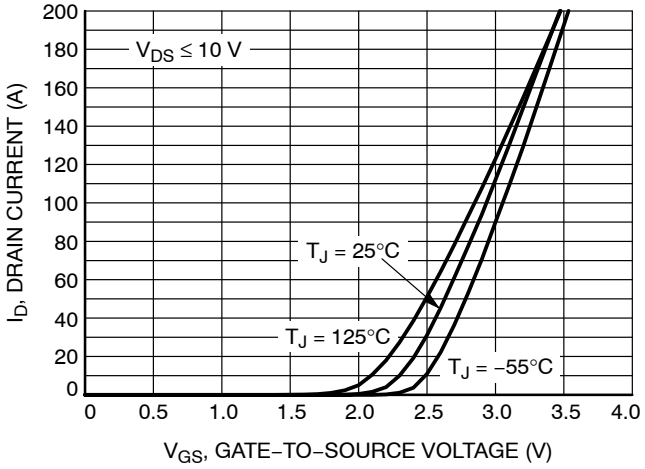

Figure 2. Transfer Characteristics

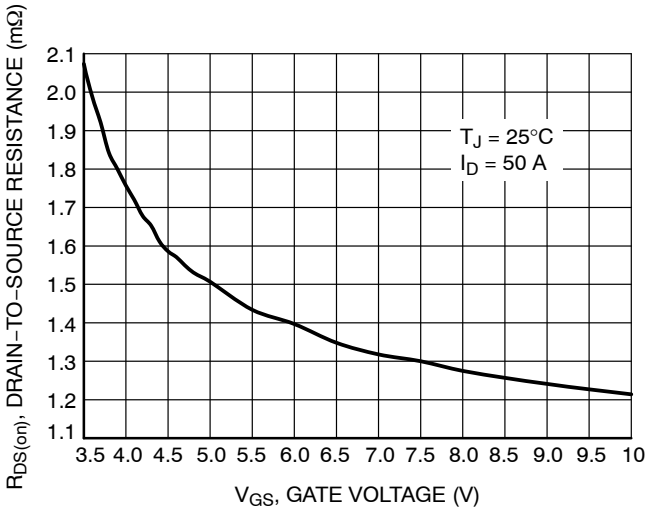

Figure 3. On−Resistance vs. Gate−to−Source Voltage

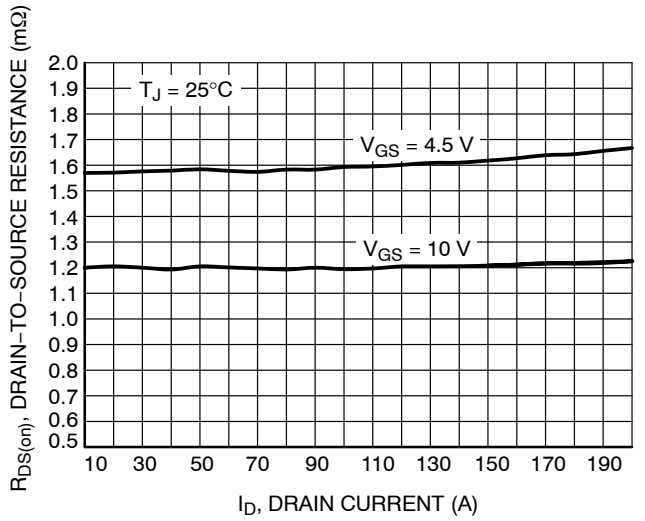

Figure 4. On−Resistance vs. Drain Current and Gate Voltage

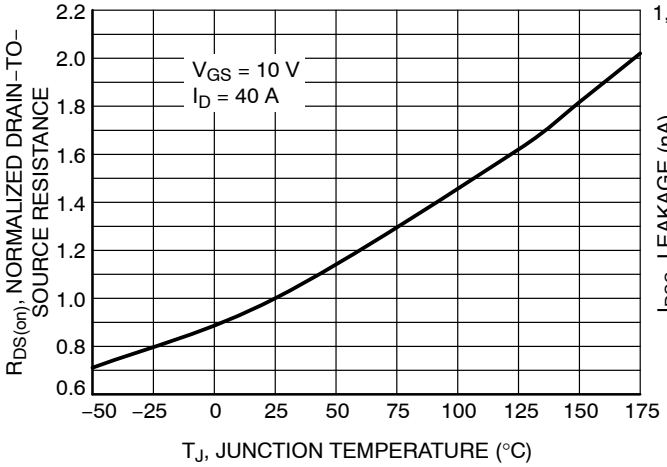

Figure 5. On−Resistance Variation with Temperature

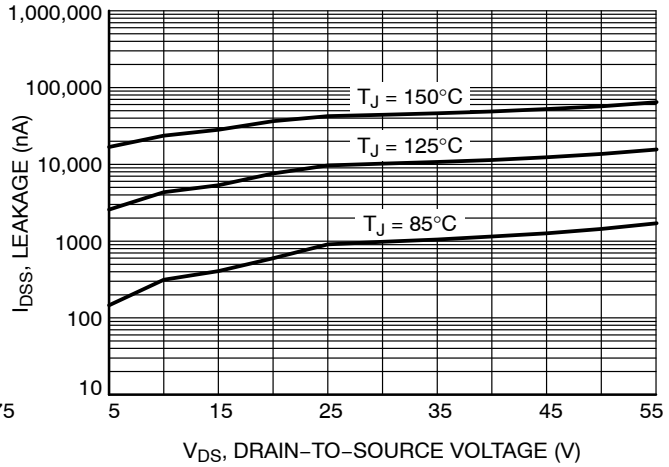

Figure 6. Drain−to−Source Leakage Current vs. Voltage

TYPICAL CHARACTERISTICS

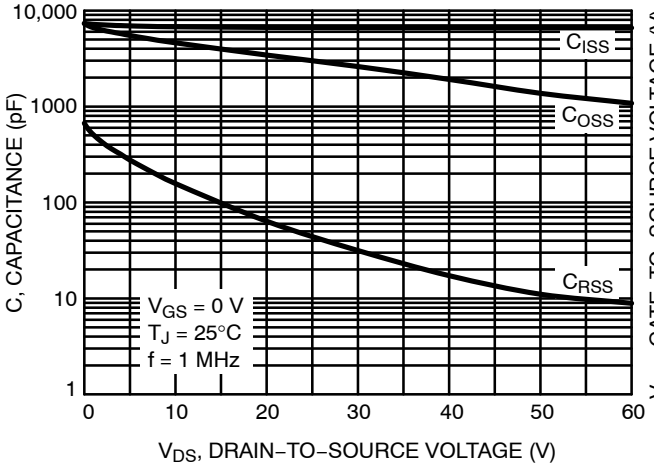

Figure 7. Capacitance Variation

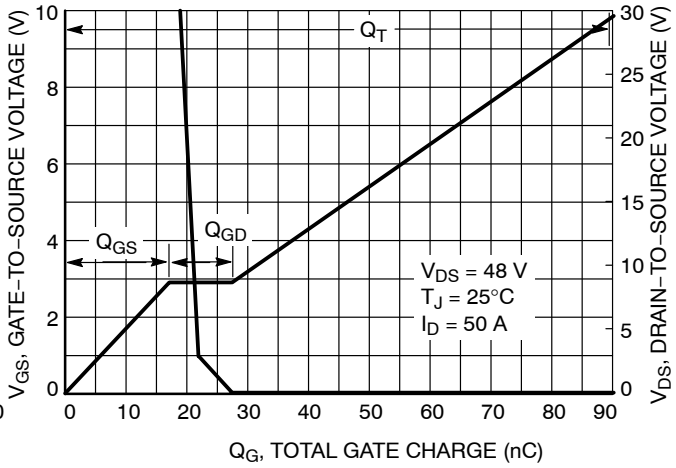

Figure 8. Gate−to−Source and Drain−to−Source Voltage vs. Total Charge

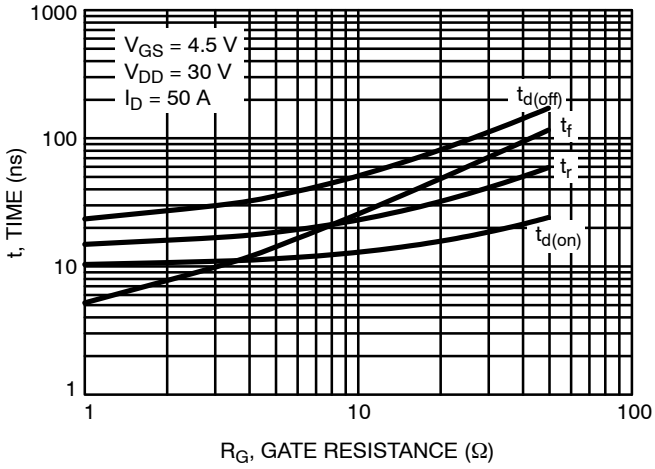

Figure 9. Resistive Switching Time Variation vs. Gate Resistance

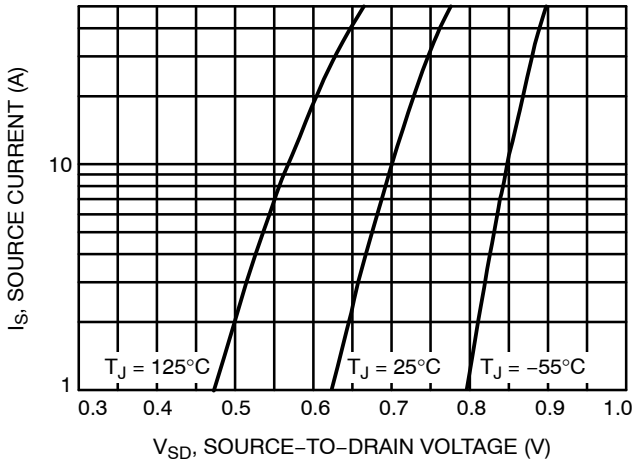

Figure 10. Diode Forward Voltage vs. Current

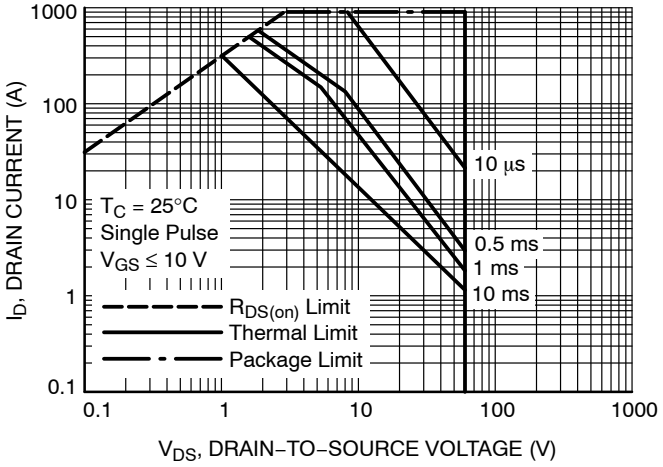

Figure 11. Safe Operating Area

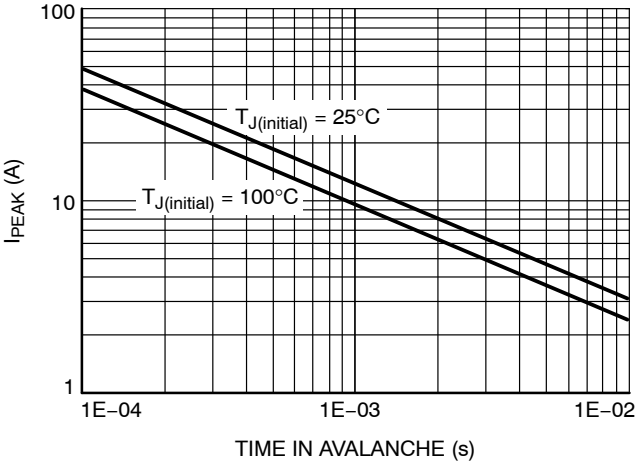

Figure 12. I_{PEAK} vs. Time in Avalanche

TYPICAL CHARACTERISTICS

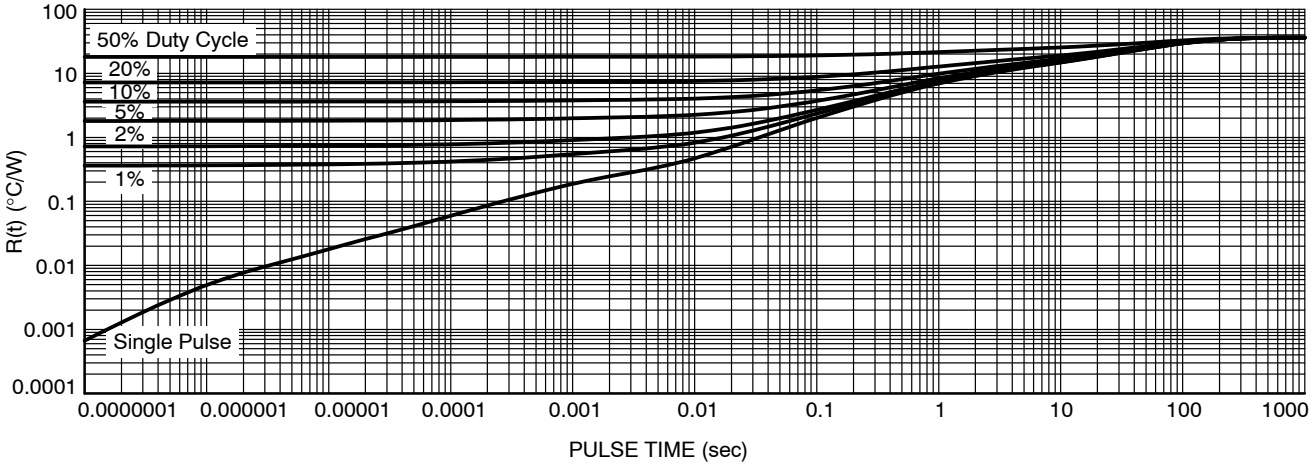

Figure 13. Thermal Characteristics

ORDERING INFORMATION

Device	Device Marking	Package	Shipping†
NTMFSC1D6N06CL	612LDC	DFN8 5x6 (Pb−Free/Halogen Free)	3000 / Tape & Reel

†For information on tape and reel specifications, including part orientation and tape sizes, please refer to our Tape and Reel Packaging Specifications Brochure, BRD8011/D.

NTMFSC1D6N06CL

PACKAGE DIMENSIONS

DFN8 5.1x6.15, 1.27P
CASE 506EG
ISSUE B

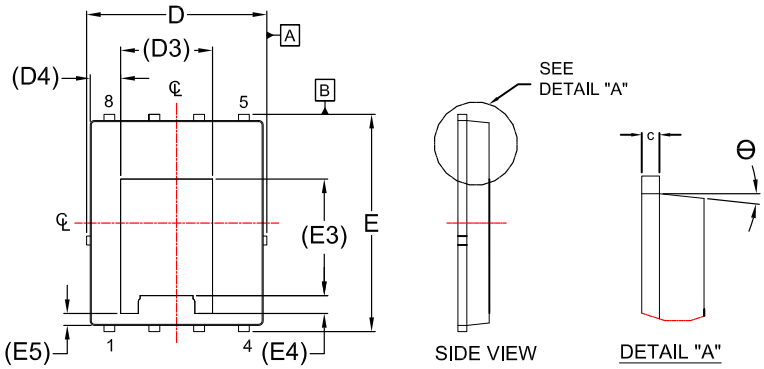

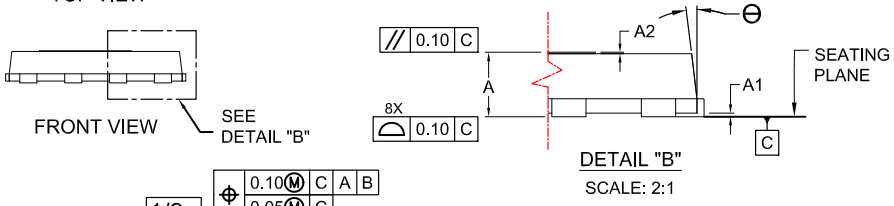

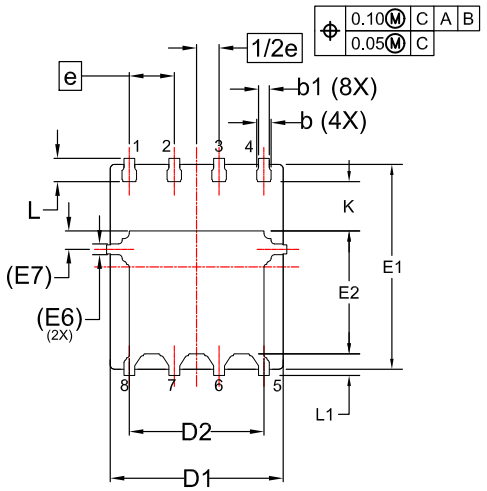

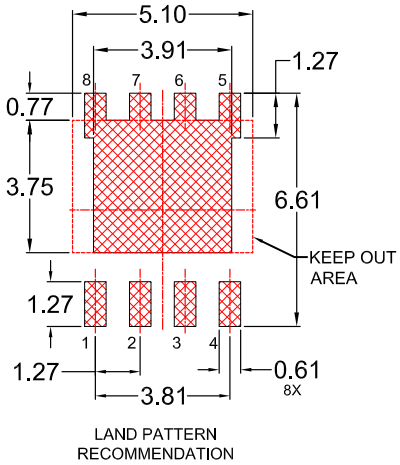

*FOR ADDITIONAL INFORMATION ON OUR PB-FREE STRATEGY AND SOLDERING DETAILS, PLEASE DOWNLOAD THE ON SEMICONDUCTOR SOLDERING AND MOUNTING TECHNIQUES REFERENCE MANUAL, SOLDERRM/D.

NOTES:

1. DIMENSIONING AND TOLERANCING PER ASME Y14.5M, 2009.
2. CONTROLLING DIMENSION: MILLIMETERS
3. COPLANARITY APPLIES TO THE EXPOSED PADS AS WELL AS THE TERMINALS.
4. DIMENSIONS D1 AND E1 DO NOT INCLUDE MOLD FLASH, PROTRUSIONS, OR GATE BURRS.
5. SEATING PLANE IS DEFINED BY THE TERMINALS. "A1" IS DEFINED AS THE DISTANCE FROM THE SEATING PLANE TO THE LOWEST POINT ON THE PACKAGE BODY.

DIM	MILLIMETERS		
	MIN.	NOM.	MAX.
A	0.80	0.90	1.00
A1	-	-	0.05
A2	-	-	0.05
b	0.31	0.41	0.51
b1	0.21	0.31	0.41
c	0.20	0.25	0.30
D	4.90	5.00	5.10
D1	4.80	4.90	5.00
D2	3.67	3.82	3.97
D3	2.60 REF		
D4	0.86 REF		
E	6.05	6.15	6.25
E1	5.70	5.80	5.90
E2	3.38	3.48	3.58
E3	3.30 REF		
E4	0.50 REF		
E5	0.34 REF		
E6	0.30 REF		
E7	0.52 REF		
e	1.27 BSC		
1/2e	0.635 BSC		
K	1.30	1.40	1.50
L	0.56	0.66	0.76
L1	0.52	0.62	0.72
Θ	0°	---	12°

DUAL COOL is a registered trademark of Semiconductor Components Industries, LLC (SCILLC) or its subsidiaries in the United States and/or other countries.

ON Semiconductor and ON are trademarks of Semiconductor Components Industries, LLC dba ON Semiconductor or its subsidiaries in the United States and/or other countries. ON Semiconductor owns the rights to a number of patents, trademarks, copyrights, trade secrets, and other intellectual property. A listing of ON Semiconductor's product/patent coverage may be accessed at www.onsemi.com/site/pdf/Patent-Marking.pdf. ON Semiconductor reserves the right to make changes without further notice to any products herein. ON Semiconductor makes no warranty, representation or guarantee regarding the suitability of its products for any particular purpose, nor does ON Semiconductor assume any liability arising out of the application or use of any product or circuit, and specifically disclaims any and all liability, including without limitation special, consequential or incidental damages. Buyer is responsible for its products and applications using ON Semiconductor products, including compliance with all laws, regulations and safety requirements or standards, regardless of any support or applications information provided by ON Semiconductor. "Typical" parameters which may be provided in ON Semiconductor data sheets and/or specifications can and do vary in different applications and actual performance may vary over time. All operating parameters, including "Typicals" must be validated for each customer application by customer's technical experts. ON Semiconductor does not convey any license under its patent rights nor the rights of others. ON Semiconductor products are not designed, intended, or authorized for use as a critical component in life support systems or any FDA Class 3 medical devices or medical devices with a same or similar classification in a foreign jurisdiction or any devices intended for implantation in the human body. Should Buyer purchase or use ON Semiconductor products for any such unintended or unauthorized application, Buyer shall indemnify and hold ON Semiconductor and its officers, employees, subsidiaries, affiliates, and distributors harmless against all claims, costs, damages, and expenses, and reasonable attorney fees arising out of, directly or indirectly, any claim of personal injury or death associated with such unintended or unauthorized use, even if such claim alleges that ON Semiconductor was negligent regarding the design or manufacture of the part. ON Semiconductor is an Equal Opportunity/Affirmative Action Employer. This literature is subject to all applicable copyright laws and is not for resale in any manner.

PUBLICATION ORDERING INFORMATION

LITERATURE FULFILLMENT:
Email Requests to: orderlit@onsemi.com

ON Semiconductor Website: www.onsemi.com

TECHNICAL SUPPORT
North American Technical Support:
Voice Mail: 1 800-282-9855 Toll Free USA/Canada
Phone: 011 421 33 790 2910

Europe, Middle East and Africa Technical Support:
Phone: 00421 33 790 2910
For additional information, please contact your local Sales Representative

◊