ELECTRONICS, INC.
44 FARRAND STREET
BLOOMFIELD, NJ 07003
(973) 748–5089
http://www.nteinc.com

RoHS 2002/95/EC

NTE30124
Super Bright LED Indicator
Super Purple, 10mm

Features:
- Low Power Consumption
- High Efficiency
- Versatile Mounting on P.C. Board or Panel
- Low Current Requirement
- Reliable and Robust

Applications:
- TV Sets
- Monitor
- Telephone
- Computer
- Circuit Board

Absolute Maximum Ratings: (T_A = +25°C unless otherwise specified)

Power Dissipation, P_D 80mW
Peak Forward Current (1/10th Duty Cycle, 0.1ms Pulse Width), I_{FM} 100mA
Continuous Forward Current, I_F 30mA
Reverse Voltage, V_R 5V
Operating Temperature Range, T_{opr} . . . . . –25° to +85°C
Storage Temperature Range, T_{stg} . . . . . –25° to +100°C
Lead Temperature (During Soldering, 3mm from Body, 5sec Max), T_L . . . . . +260°C

Electrical Optical Characteristics: (T_A = +25°C unless otherwise specified)

Parameter	Symbol	Test Conditions	Min	Typ	Max	Unit
Luminous Intensity	I_V	I_F = 20mA	150	180	–	mcd
View Angle of Half Power	$2\theta_{1/2}$	I_F = 20mA	–	20	–	deg
Peak Emission Wavelength	λ_P	I_F = 20mA	–	400	–	nm
Dominant Emission Wavelength	λ_d	I_F = 20mA	–	–	–	nm
Full Width at Half Max	$\Delta\lambda$	I_F = 20mA	–	12.3	–	nm
Forward Voltage	V_F	I_F = 20mA	–	3.3	4.0	V
Reverse Current	I_R	V_R = 5V	–	–	10	μA

Note 1. Luminous intensity is measured with a light sensor and filter combination that approximates the CIE eye–response curve.
Note 2. $\theta_{1/2}$ is the off–axis angle at which the luminous intensity is half the axial luminous intensity.
Note 3. The dominant wavelength (λ_d) is derived from the CIE chromaticity diagram and represents the single wavelenght, which defines the color of the device.

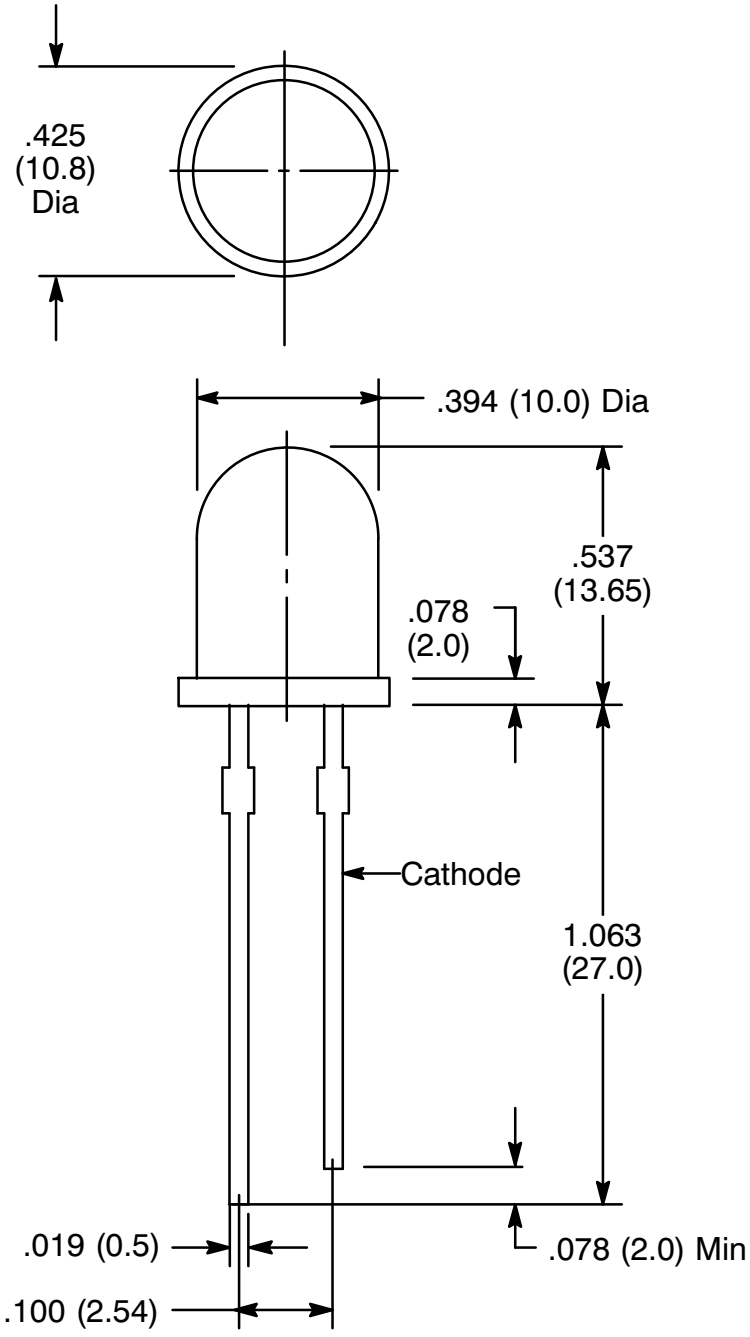
.425
(10.8)
Dia
.394 (10.0) Dia
.537
(13.65)
.078
(2.0)
Cathode
1.063
(27.0)
.019 (0.5)
.100 (2.54)
.078 (2.0) Min