MOSFET – Power, N-Channel, SUPERFET® III

800 V, 600 mΩ, 8 A

NTD600N80S3Z

ON Semiconductor®

www.onsemi.com

$V_{(BR)DSS}$	$R_{DS(ON)}$ MAX	I_D MAX
800 V	600 mΩ	8 A

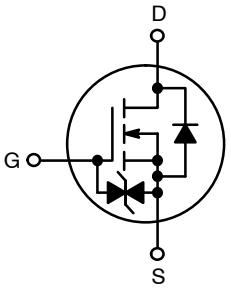

POWER MOSFET

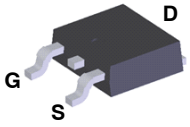

D–PAK
TO–252
CASE 369AS

Description

800 V SUPERFET III MOSFET is ON Semiconductor's high performance MOSFET family offering 800 V breakdown voltage.

New 800 V SUPERFET III MOSFET which is optimized for primary switch of flyback converter, enables lower switching losses and case temperature without sacrificing EMI performance thanks to its optimized design. In addition, internal Zener Diode significantly improves ESD capability.

This new family of 800 V SUPERFET III MOSFET enables to make more efficient, compact, cooler and more robust applications because of its remarkable performance in switching power applications such as Laptop adapter, Audio, Lighting, ATX power and industrial power supplies.

Features

- Typ. $R_{DS(on)}$ = 550 mΩ
- Ultra Low Gate Charge (Typ. Q_g = 15.5 nC)
- Low Stored Energy in Output Capacitance (Eoss = 1.74 μJ @ 400 V)
- 100% Avalanche Tested
- ESD Improved Capability with Zener Diode
- RoHS Compliant

Applications

- Adapters / Chargers
- LED Lighting
- AUX Power
- Audio
- Industrial Power

MARKING DIAGRAM

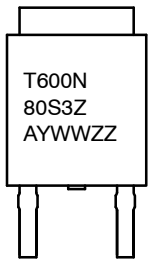

T600N80S3Z	= Specific Device Code
A	= Assembly Location
Y	= Year
WW	= Work Week
ZZ	= Lot Code

ORDERING INFORMATION

See detailed ordering and shipping information on page 2 of this data sheet.

© Semiconductor Components Industries, LLC, 2020

ABSOLUTE MAXIMUM RATINGS (T_J = 25°C, unless otherwise noted)

Symbol	Parameter		Value	Unit
V_{DSS}	Drain−to−Source Voltage		800	V
V_{GS}	Gate−to−Source Voltage	DC	±20	V
		AC (f > 1 Hz)	±30	
I_D	Drain Current	Continuous (T_C = 25°C)	8*	A
		Continuous (T_C = 100°C)	5*	
I_{DM}	Drain Current	Pulsed (Note 1)	21*	A
E_{AS}	Single Pulsed Avalanche Energy (Note 2)		24	mJ
I_{AS}	Avalanche Current (Note 2)		1.2	A
E_{AR}	Repetitive Avalanche Energy (Note 1)		0.6	mJ
dv/dt	MOSFET dv/dt		100	V/ns
	Peak Diode Recovery dv/dt (Note 3)		10	
P_D	Power Dissipation	(T_C = 25°C)	60	W
		Derate Above 25°C	0.48	W/°C
T_J, T_{STG}	Operating and Storage Temperature Range		−55 to +150	°C
T_L	Lead Temperature Soldering Reflow for Soldering Purposes (1/8″ from Case for 10 seconds)		260	°C

Stresses exceeding those listed in the Maximum Ratings table may damage the device. If any of these limits are exceeded, device functionality should not be assumed, damage may occur and reliability may be affected.

*Drain current limited by maximum junction temperature.

1. Repetitive rating: pulse−width limited by maximum junction temperature.
2. I_{AS} = 1.2 A, R_G = 25 Ω, starting T_J = 25°C.
3. $I_{SD} \le 2$ A, di/dt ≤ 200 A/μs, $V_{DD} \le 400$ V, starting T_J = 25°C.

THERMAL RESISTANCE RATINGS

Symbol	Parameter	Value	Unit
$R_{\theta JC}$	Junction−to−Case − Steady State	2.08	°C/W
$R_{\theta JA}$	Junction−to−Ambient − Steady State	62.5	

PACKAGE MARKING AND ORDERING INFORMATION

Part Number	Top Marking	Package	Reel Size	Tape Width	Quantity
NTD600N80S3Z	NTD600N80S3Z	TO−252	330 mm	16 mm	2500 Units

ELECTRICAL CHARACTERISTICS (T_J = 25°C unless otherwise noted)

Symbol	Parameter	Test Conditions	Min	Typ	Max	Unit
OFF CHARACTERISTICS						
BV_{DSS}	Drain−to−Source Breakdown Voltage	V_{GS} = 0 V, I_D = 1 mA, T_J = 25°C	800			V
		V_{GS} = 0 V, I_D = 1 mA, T_J = 150°C	900			V
ΔBV_{DSS} / ΔT_J	Drain−to−Source Breakdown Voltage Temperature Coefficient	I_D = 1 mA, Referenced to 25°C		1.1		V/°C
I_{DSS}	Zero Gate Voltage Drain Current	V_{DS} = 800 V, V_{GS} = 0 V			1	μA
		V_{DS} = 640 V, T_C = 125°C		0.8		
I_{GSS}	Gate−to−Body Leakage Current	V_{GS} = ±20 V, V_{DS} = 0 V			1	μA
ON CHARACTERISTICS						
$V_{GS(th)}$	Gate Threshold Voltage	V_{GS} = V_{DS}, I_D = 0.18 mA	2.2		3.8	V
$R_{DS(on)}$	Static Drain−to−Source On Resistance	V_{GS} = 10 V, I_D = 4 A		550	600	mΩ
g_{FS}	Forward Transconductance	V_{DS} = 20 V, I_D = 4 A		9.4		S
DYNAMIC CHARACTERISTICS						
C_{iss}	Input Capacitance	V_{DS} = 400 V, V_{GS} = 0 V, f = 250 kHz		725		pF
C_{oss}	Output Capacitance			12		pF
$C_{oss(eff.)}$	Effective Output Capacitance	V_{DS} = 0 V to 400 V, V_{GS} = 0 V		139		pF
$C_{oss(er.)}$	Energy Related Output Capacitance	V_{DS} = 0 V to 400 V, V_{GS} = 0 V		21		pF
$Q_{g(tot)}$	Total Gate Charge at 10 V	V_{DD} = 400 V, I_D = 4 A, V_{GS} = 10 V (Note 4)		15.5		nC
Q_{gs}	Gate−to−Source Gate Charge			3.1		nC
Q_{gd}	Gate−to−Drain “Miller” Charge			5.1		nC
ESR	Equivalent Series Resistance	f = 1 MHz		3.5		Ω
SWITCHING CHARACTERISTICS						
$t_{d(on)}$	Turn-On Delay Time	V_{DD} = 400 V, I_D = 4 A, V_{GS} = 10 V, R_g = 4.7 Ω (Note 4)		12.3		ns
t_r	Turn-On Rise Time			5.9		ns
$t_{d(off)}$	Turn-Off Delay Time			39.5		ns
t_f	Turn-Off Fall Time			8.2		ns
SOURCE−TO−DRAIN DIODE CHARACTERISTICS						
I_S	Maximum Continuous Source−to−Drain Diode Forward Current				8	A
I_{SM}	Maximum Pulsed Source−to−Drain Diode Forward Current				21	A
V_{SD}	Source−to−Drain Diode Forward Voltage	V_{GS} = 0 V, I_{SD} = 4 A			1.2	V
t_{rr}	Reverse Recovery Time	V_{GS} = 0 V, I_{SD} = 2 A, dI_F/dt = 100 A/μs		137		ns
Q_{rr}	Reverse Recovery Charge			0.91		μC

Product parametric performance is indicated in the Electrical Characteristics for the listed test conditions, unless otherwise noted. Product performance may not be indicated by the Electrical Characteristics if operated under different conditions.

4. Essentially independent of operating temperature typical characteristics.

SUPERFET is a registered trademark of Semiconductor Components Industries, LLC (SCILLC) or its subsidiaries in the United States and/or other countries.

TYPICAL CHARACTERISTICS

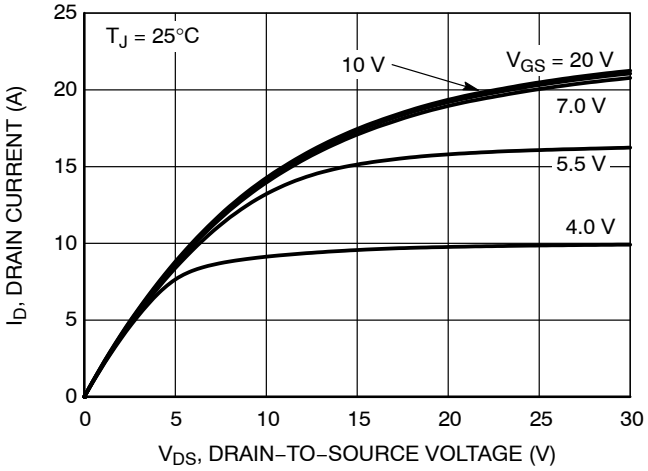

Figure 1. On−Region Characteristics

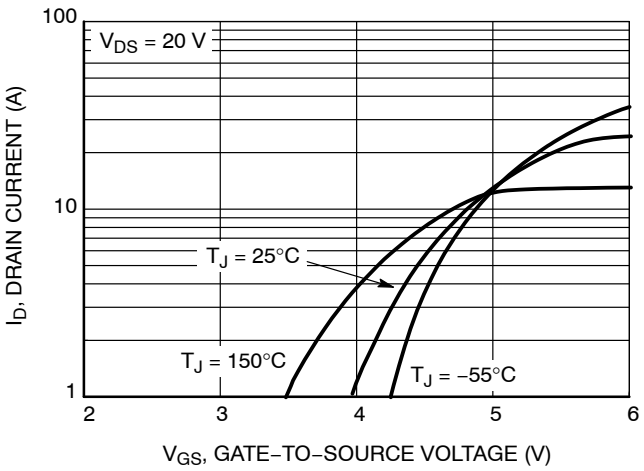

Figure 2. Transfer Characteristics

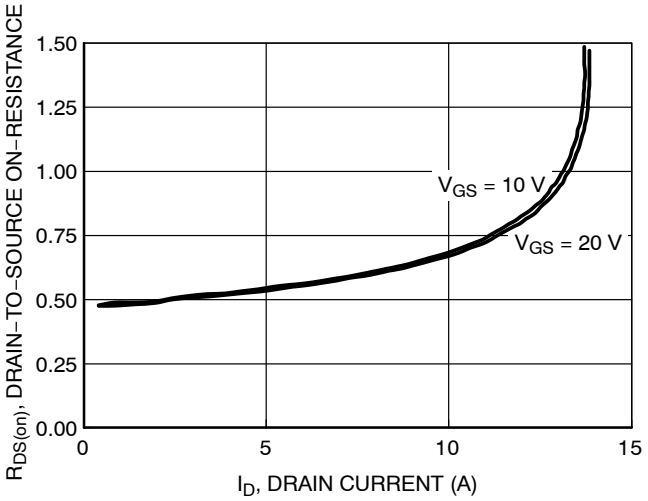

Figure 3. On Resistance vs. Drain Current

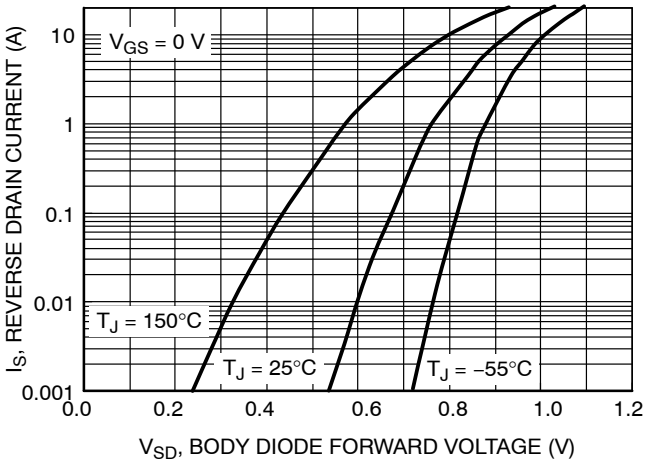

Figure 4. Diode Forward Voltage vs. Current

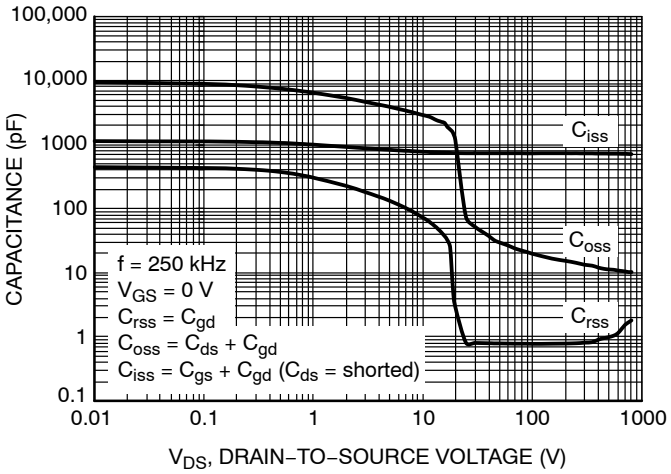

Figure 5. Capacitance Characteristics

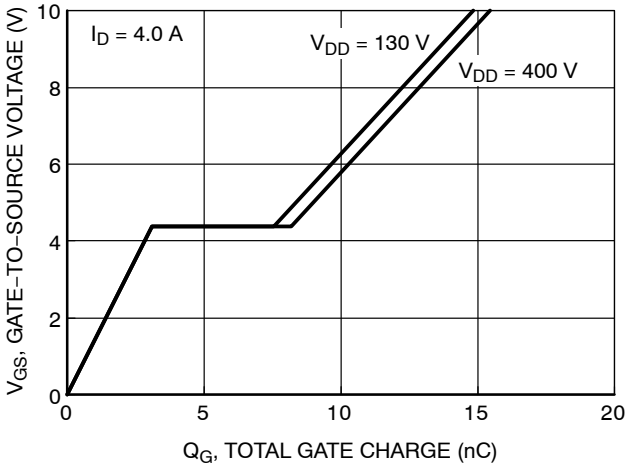

Figure 6. Gate Charge Characteristics

TYPICAL CHARACTERISTICS

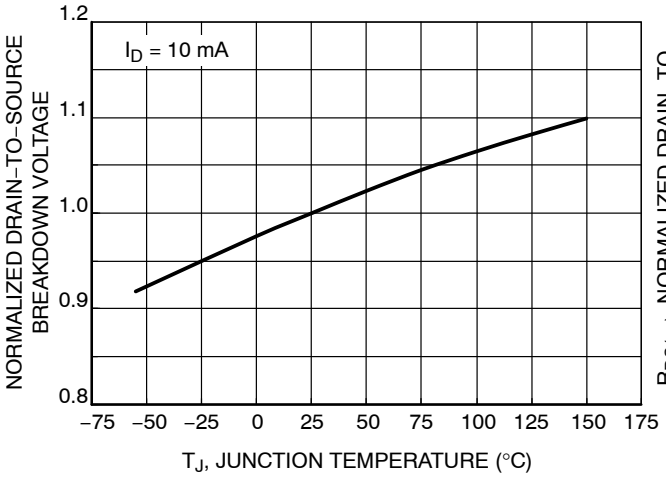

Figure 7. Normalized BV_{DSS} vs. Temperature

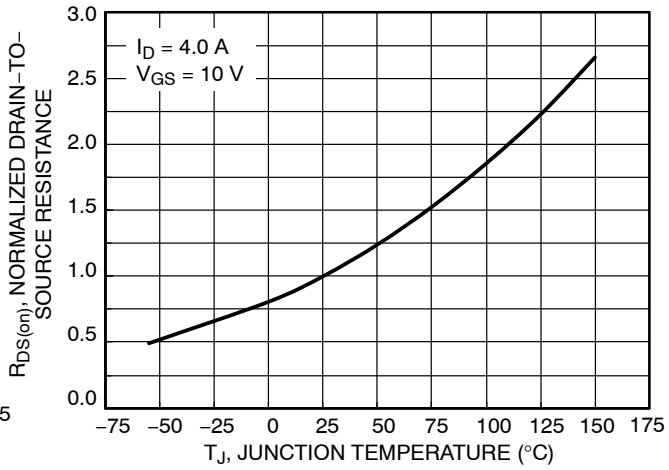

Figure 8. On−Resistance Variation vs. Temperature

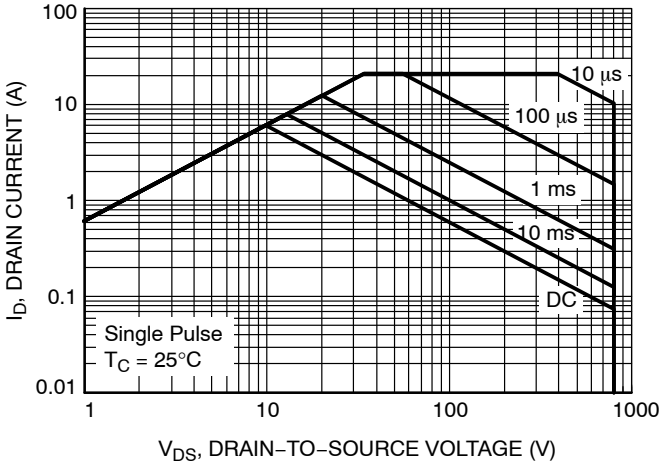

Figure 9. Safe Operating Area

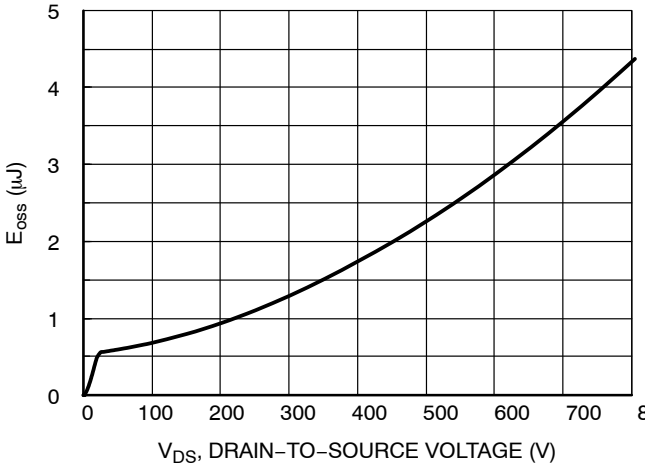

Figure 10. E_{oss} vs. Drain−to−Source Voltage

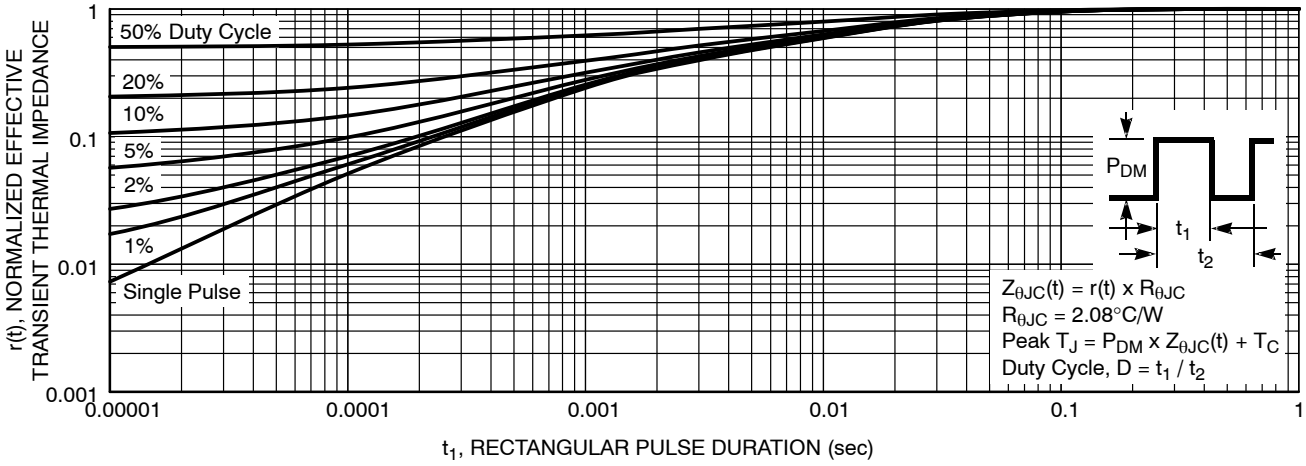

Figure 11. Transient Thermal Impedance

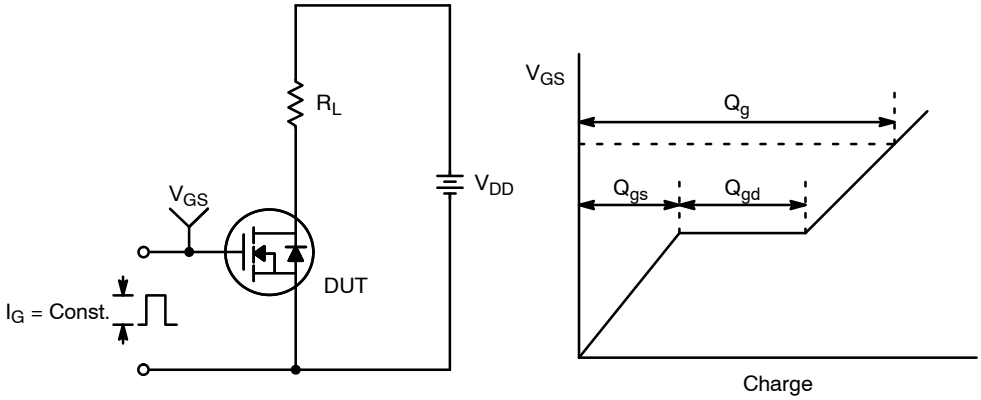

Figure 12. Gate Charge Test Circuit & Waveform

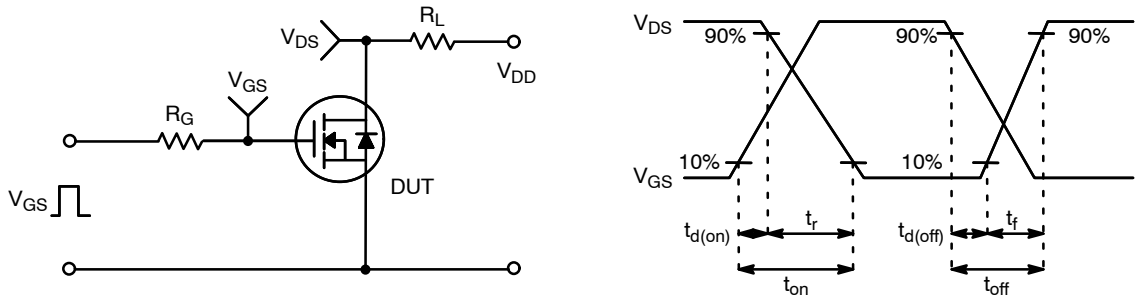

Figure 13. Resistive Switching Test Circuit & Waveforms

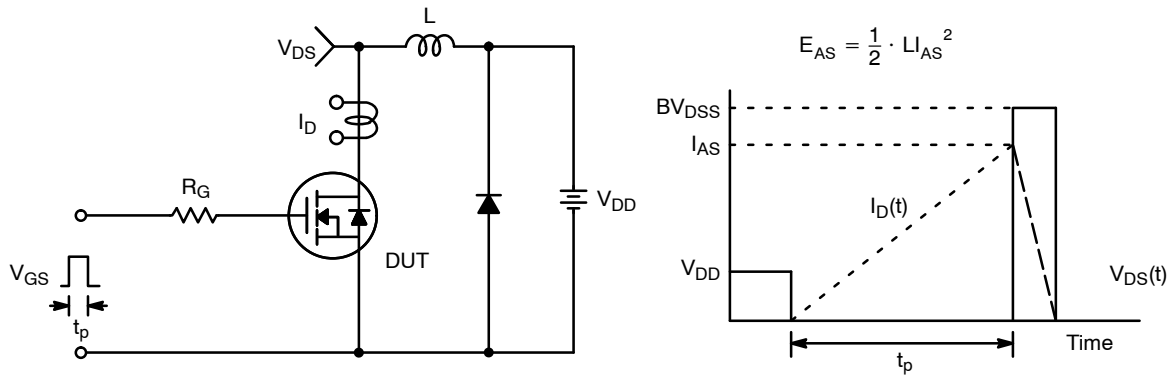

Figure 14. Unclamped Inductive Switching Test Circuit & Waveforms

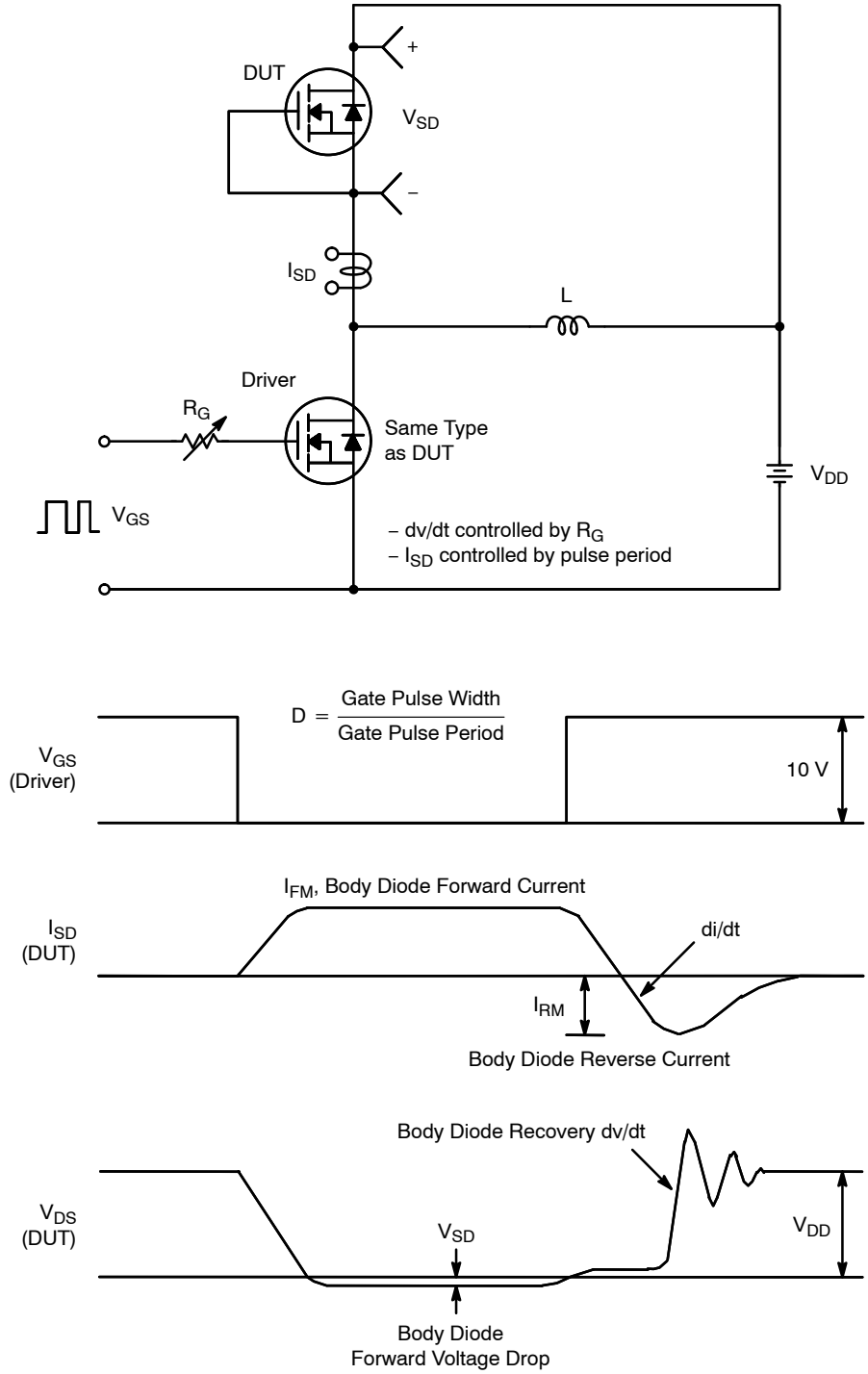

Figure 15. Peak Diode Recovery dv/dt Test Circuit & Waveforms

DPAK3 (TO−252 3 LD)
CASE 369AS
ISSUE O

DATE 30 SEP 2016

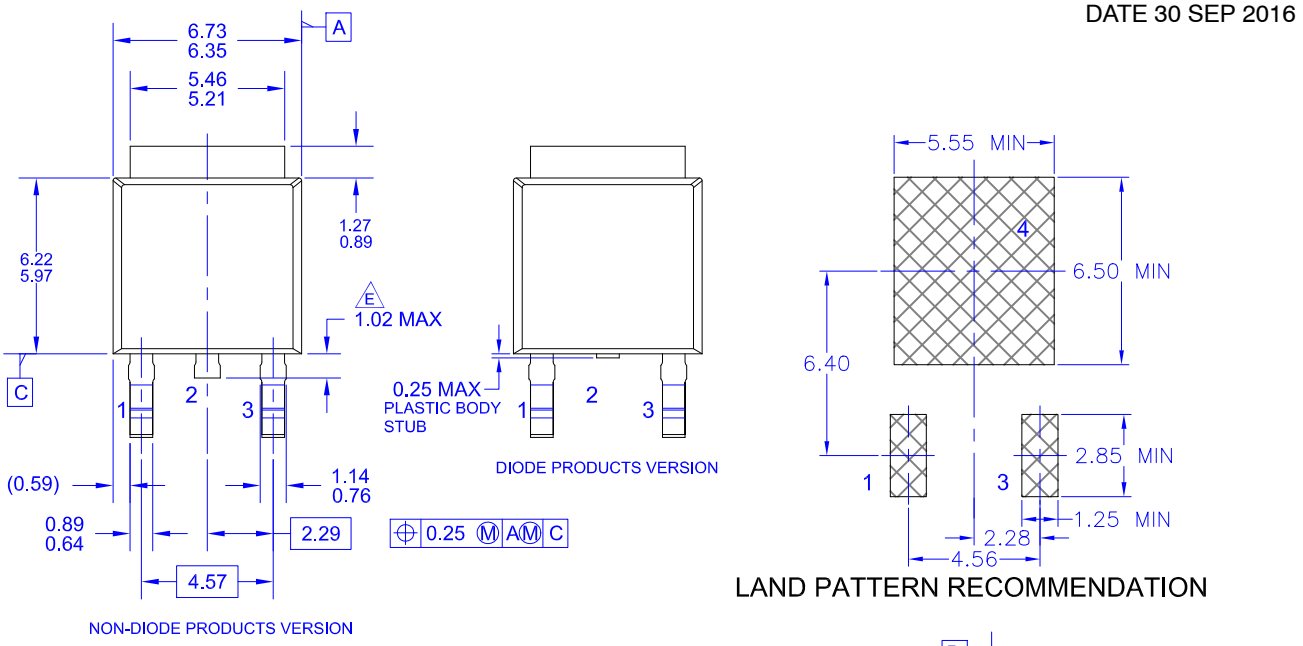

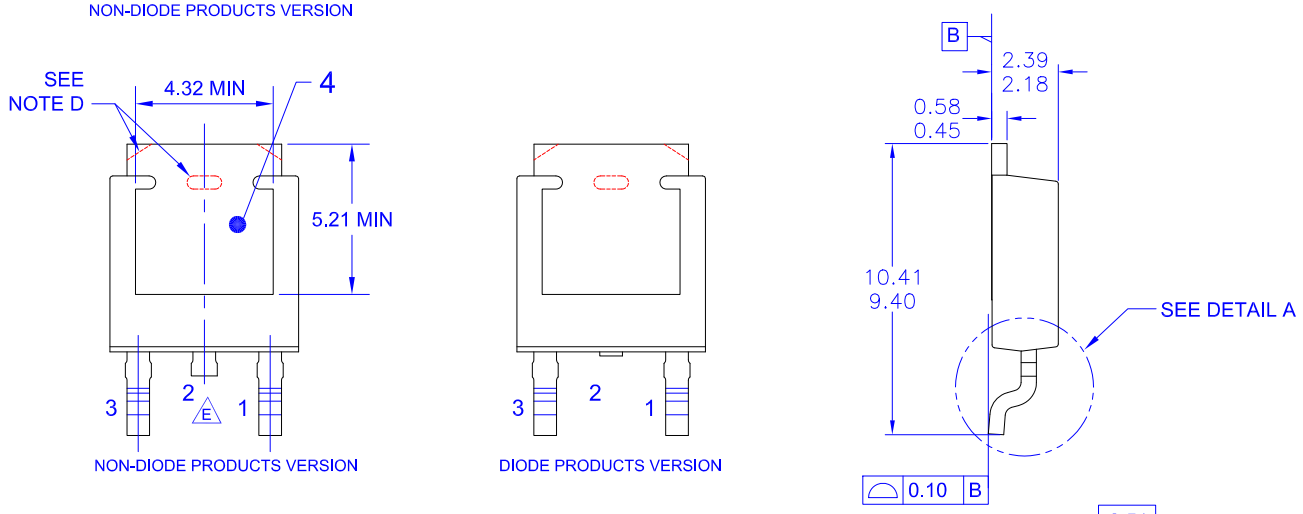

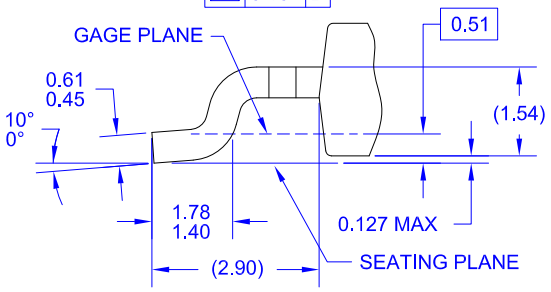

NOTES: UNLESS OTHERWISE SPECIFIED
A) THIS PACKAGE CONFORMS TO JEDEC, TO-252, ISSUE C, VARIATION AA.
B) ALL DIMENSIONS ARE IN MILLIMETERS.
C) DIMENSIONING AND TOLERANCING PER ASME Y14.5M-2009.
D) SUPPLIER DEPENDENT MOLD LOCKING HOLES OR CHAMFERED CORNERS OR EDGE PROTRUSION.
E) TRIMMED CENTER LEAD IS PRESENT ONLY FOR DIODE PRODUCTS
F) DIMENSIONS ARE EXCLUSSIVE OF BURSS, MOLD FLASH AND TIE BAR EXTRUSIONS.
G) LAND PATTERN RECOMENDATION IS BASED ON IPC7351A STD TO228P991X239-3N.

DOCUMENT NUMBER:	**98AON13810G**	Electronic versions are uncontrolled except when accessed directly from the Document Repository. Printed versions are uncontrolled except when stamped "CONTROLLED COPY" in red.
DESCRIPTION:	**DPAK3 (TO−252 3 LD)**	**PAGE 1 OF 1**

ON Semiconductor and ON are trademarks of Semiconductor Components Industries, LLC dba ON Semiconductor or its subsidiaries in the United States and/or other countries. ON Semiconductor reserves the right to make changes without further notice to any products herein. ON Semiconductor makes no warranty, representation or guarantee regarding the suitability of its products for any particular purpose, nor does ON Semiconductor assume any liability arising out of the application or use of any product or circuit, and specifically disclaims any and all liability, including without limitation special, consequential or incidental damages. ON Semiconductor does not convey any license under its patent rights nor the rights of others.

© Semiconductor Components Industries, LLC, 2019

onsemi, ONSEMI , and other names, marks, and brands are registered and/or common law trademarks of Semiconductor Components Industries, LLC dba "**onsemi**" or its affiliates and/or subsidiaries in the United States and/or other countries. **onsemi** owns the rights to a number of patents, trademarks, copyrights, trade secrets, and other intellectual property. A listing of **onsemi**'s product/patent coverage may be accessed at www.onsemi.com/site/pdf/Patent−Marking.pdf. **onsemi** reserves the right to make changes at any time to any products or information herein, without notice. The information herein is provided "as−is" and **onsemi** makes no warranty, representation or guarantee regarding the accuracy of the information, product features, availability, functionality, or suitability of its products for any particular purpose, nor does **onsemi** assume any liability arising out of the application or use of any product or circuit, and specifically disclaims any and all liability, including without limitation special, consequential or incidental damages. Buyer is responsible for its products and applications using **onsemi** products, including compliance with all laws, regulations and safety requirements or standards, regardless of any support or applications information provided by **onsemi**. "Typical" parameters which may be provided in **onsemi** data sheets and/or specifications can and do vary in different applications and actual performance may vary over time. All operating parameters, including "Typicals" must be validated for each customer application by customer's technical experts. **onsemi** does not convey any license under any of its intellectual property rights nor the rights of others. **onsemi** products are not designed, intended, or authorized for use as a critical component in life support systems or any FDA Class 3 medical devices or medical devices with a same or similar classification in a foreign jurisdiction or any devices intended for implantation in the human body. Should Buyer purchase or use **onsemi** products for any such unintended or unauthorized application, Buyer shall indemnify and hold **onsemi** and its officers, employees, subsidiaries, affiliates, and distributors harmless against all claims, costs, damages, and expenses, and reasonable attorney fees arising out of, directly or indirectly, any claim of personal injury or death associated with such unintended or unauthorized use, even if such claim alleges that **onsemi** was negligent regarding the design or manufacture of the part. **onsemi** is an Equal Opportunity/Affirmative Action Employer. This literature is subject to all applicable copyright laws and is not for resale in any manner.

PUBLICATION ORDERING INFORMATION

LITERATURE FULFILLMENT:
Email Requests to: orderlit@onsemi.com

onsemi Website: www.onsemi.com

TECHNICAL SUPPORT
North American Technical Support:
Voice Mail: 1 800−282−9855 Toll Free USA/Canada
Phone: 011 421 33 790 2910

Europe, Middle East and Africa Technical Support:
Phone: 00421 33 790 2910
For additional information, please contact your local Sales Representative

◊