NTC Thermistors, Glass Encapsulated High Temperature Sensors



FEATURES

- Small diameter down to 1.8 mm
- Quick response time down to 0.9 s
- Wide temperature range from -40 °C to +200 °C
- Resistant to corrosive atmospheres and harsh environments
- Available in bulk or on tape
- Mounting: axial
- Material categorization: for definitions of compliance please see www.vishay.com/doc?99912

RoHS COMPLIANT

QUICK REFERENCE DATA

PARAMETER	VALUE	UNIT
Resistance value at 25 °C (R_{25})	10K to 220K	Ω
Tolerance on R_{25}-value	± 5	%
$B_{25/85}$-value	3797 to 3977	K
Tolerance on $B_{25/85}$-value	± 1.3 to ± 3	%
Operating temperature range	-40 to +200	°C
Maximum power dissipation at 55 °C	100	mW
Dissipation factor	2.5	mW/K
Response time	0.9	s
Thermal time constant τ	6	s
Climatic category (LCT / UCT / days)	40 / 200 / 56	
Weight	≈ 0.14	g

APPLICATIONS

High temperature measurement, sensing and control:

- Domestic appliances
- Industrial process control

DESIGN-IN SUPPORT

For complete Curve Computation, visit:
www.vishay.com/thermistors/curve-computation-list/

DESCRIPTION

These thermistors have a negative temperature coefficient and are mounted in a glass envelope:

NTCLG100E2...B (SOD27) with tinned copper-clad steel leads in bulk

NTCLG100E2...T is the taped on bandolier version

MOUNTING

By soldering, clamping or welding. Bending of the leads should be done at least 3 mm from the glass body and without exerting forces on the glass body.

ELECTRICAL DATA AND ORDERING INFORMATION

R_{25} (kΩ)	$B_{25/85}$-VALUE (K)	$B_{25/85}$-VALUE (± %)	SAP MATERIAL AND ORDERING NUMBER NTCLG100E2...	OLD 12NC CODE 2381 633 3/8...
10	3977	1.3	103JB	3103
20	3977	1.3	203JB	3203
30	3977	1.3	303JB	3303
100	3977	1.3	104JB	3104
220	3797	3.0	224JB	3224

Notes

- In SAP part replace last character by B for bulk and by T for taped components
- In 12NC the 8th digit stands for packing: 8 for bulk and 3 for taped components

For technical questions, contact: nlr@vishay.com

THIS DOCUMENT IS SUBJECT TO CHANGE WITHOUT NOTICE. THE PRODUCTS DESCRIBED HEREIN AND THIS DOCUMENT ARE SUBJECT TO SPECIFIC DISCLAIMERS, SET FORTH AT www.vishay.com/doc?91000

DIMENSIONS in millimeters

Component outline (SOD27)

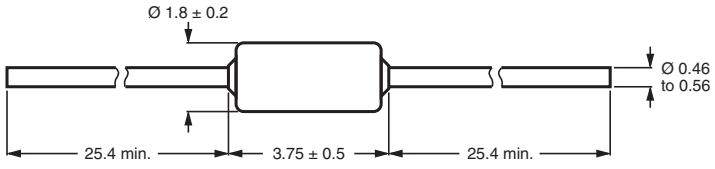

DERATING

Power derating curve

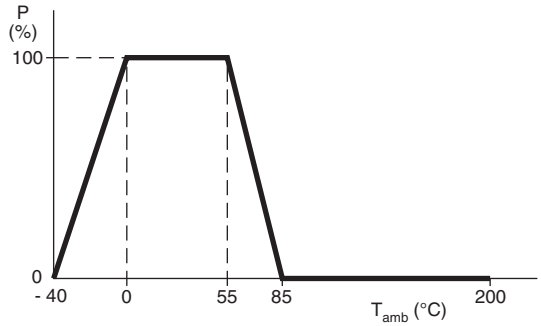

Note

- Zero power is considered as measuring power max. 1 % of rated power

STABILITY CHARACTERISTICS

Stability of glass encapsulated NTCs in thermal shock test (200 000 cycles -40 °C / +200 °C)

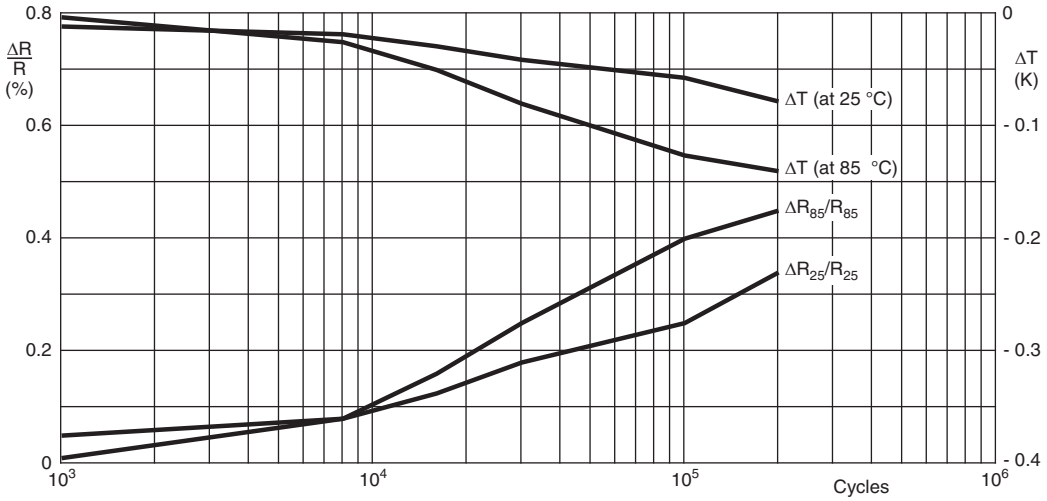

For technical questions, contact: nlr@vishay.com

THIS DOCUMENT IS SUBJECT TO CHANGE WITHOUT NOTICE. THE PRODUCTS DESCRIBED HEREIN AND THIS DOCUMENT ARE SUBJECT TO SPECIFIC DISCLAIMERS, SET FORTH AT www.vishay.com/doc?91000

For complete Curve Computation, visit: www.vishay.com/thermistors/curve-computation-list/

RESISTANCE VALUES AT INTERMEDIATE TEMPERATURES FOR NTCLG100E2								
TEMPERATURE (°C)	R_T/R_{25}	*R* FOR 10 kΩ	*R* FOR 20 kΩ	*R* FOR 30 kΩ	*R* FOR 100 kΩ	Δ*R*/*R* (± %)	α (%/K)	Δ*T* (± K)
-40	33.21	332 094	664 187	996 281	3 320 936	10.08	-6.62	1.52
-35	23.99	239 900	479 799	719 699	2 398 996	9.59	-6.39	1.50
-30	17.52	175 200	350 399	525 599	1 751 996	9.12	-6.18	1.48
-25	12.93	129 287	258 574	387 861	1 292 869	8.67	-5.98	1.45
-20	9.636	96 358	192 716	289 074	963 582	8.24	-5.78	1.42
-15	7.25	72 500	145 001	217 501	725 004	7.82	-5.60	1.40
-10	5.505	55 046	110 092	165 138	550 459	7.42	-5.42	1.37
-5	4.216	42 157	84 314	126 471	421 570	7.04	-5.25	1.34
0	3.255	32 554	65 108	97 663	325 542	6.67	-5.09	1.31
5	2.534	25 339	50 677	76 016	253 386	6.31	-4.93	1.28
10	1.987	19 872	39 744	59 617	198 722	5.96	-4.79	1.25
15	1.57	15 698	31 397	47 095	156 985	5.63	-4.64	1.21
20	1.249	12 488	24 975	37 463	124 877	5.31	-4.51	1.18
25	1.000	10 000	20 000	30 000	100 000	5.00	-4.38	1.14
30	0.8059	8059	16 118	24 177	80 591	5.30	-4.25	1.25
35	0.6535	6535	13 069	19 604	65 347	5.59	-4.13	1.35
40	0.5330	5330	10 660	15 990	53 299	5.87	-4.02	1.46
45	0.4372	4372	8743	13 115	43 717	6.14	-3.91	1.57
50	0.3605	3605	7211	10 816	36 053	6.41	-3.80	1.69
55	0.2989	2989	5977	8966	29 887	6.66	-3.70	1.80
60	0.2490	2490	4980	7470	24 900	6.91	-3.60	1.92
65	0.2084	2084	4169	6253	20 844	7.15	-3.51	2.04
70	0.1753	1753	3506	5259	17 530	7.39	-3.42	2.16
75	0.1481	1481	2962	4443	14 809	7.61	-3.33	2.29
80	0.1256	1256	2513	3769	12 564	7.84	-3.25	2.41
85	0.1070	1070	2141	3211	10 703	8.05	-3.17	2.54
90	0.09154	915.4	1831	2746	9154	8.26	-3.09	2.67
95	0.07860	786.0	1572	2358	7860	8.46	-3.01	2.81
100	0.06773	677.3	1355	2032	6773	8.66	-2.94	2.95
105	0.05857	585.7	1171	1757	5857	8.85	-2.87	3.08
110	0.05083	508.3	1017	1525	5083	9.04	-2.80	3.23
115	0.04426	442.6	885.2	1328	4426	9.22	-2.74	3.37
120	0.03866	386.6	773.2	1160	3866	9.40	-2.67	3.52
125	0.03387	338.7	677.5	1016	3387	9.57	-2.61	3.66
130	0.02977	297.7	595.4	893.1	2977	9.74	-2.55	3.81
135	0.02624	262.4	524.8	787.2	2624	9.91	-2.50	3.97
140	0.02319	231.9	463.8	695.7	2319	10.07	-2.44	4.12
145	0.02055	205.5	411.1	616.6	2055	10.23	-2.39	4.28
150	0.01826	182.6	365.3	547.9	1826	10.38	-2.34	4.44
155	0.01627	162.7	325.4	488.1	1627	10.53	-2.29	4.60
160	0.01453	145.3	290.6	435.9	1453	10.67	-2.24	4.77
165	0.01301	130.1	260.1	390.2	1301	10.82	-2.19	4.94
170	0.01167	116.7	233.4	350.1	1167	10.96	-2.15	5.11
175	0.01049	104.9	209.9	314.8	1049	11.09	-2.10	5.28
180	0.009457	94.57	189.1	283.7	945.7	11.23	-2.06	5.45
185	0.008541	85.41	170.8	256.2	854.1	11.36	-2.02	5.63
190	0.007729	77.29	154.6	231.9	772.9	11.49	-1.98	5.81
195	0.007009	70.09	140.2	210.3	700.9	11.61	-1.94	5.99
200	0.006367	63.67	127.3	191.0	636.7	11.73	-1.90	6.17

For technical questions, contact: nlr@vishay.com
THIS DOCUMENT IS SUBJECT TO CHANGE WITHOUT NOTICE. THE PRODUCTS DESCRIBED HEREIN AND THIS DOCUMENT ARE SUBJECT TO SPECIFIC DISCLAIMERS, SET FORTH AT www.vishay.com/doc?91000

For complete Curve Computation, visit: www.vishay.com/thermistors/curve-computation-list/

RESISTANCE VALUES AT INTERMEDIATE TEMPERATURES FOR NTCLG100E2					
TEMPERATURE (°C)	R_T/R_{25}	R FOR 220 kΩ	$\Delta R/R$ (± %)	α (%/K)	ΔT (± K)
-40	25.78	5 672 264	16.18	-6.07	2.67
-35	19.13	4 207 576	15.11	-5.88	2.57
-30	14.32	3 150 400	14.07	-5.70	2.47
-25	10.82	2 380 124	13.08	-5.52	2.37
-20	8.244	1 813 764	12.13	-5.35	2.27
-15	6.335	1 393 675	11.22	-5.19	2.16
-10	4.907	1 079 442	10.34	-5.03	2.05
-5	3.829	842 474	9.49	-4.88	1.94
0	3.011	662 373	8.67	-4.74	1.83
5	2.384	524 457	7.88	-4.60	1.71
10	1.900	418 080	7.13	-4.47	1.59
15	1.525	335 455	6.39	-4.34	1.47
20	1.231	270 847	5.68	-4.22	1.35
25	1.000	220 000	5.00	-4.10	1.22
30	0.817	179 734	5.66	-3.99	1.42
35	0.6712	147 656	6.30	-3.88	1.63
40	0.5543	121 952	6.92	-3.77	1.83
45	0.4602	101 242	7.52	-3.67	2.05
50	0.3839	84 466	8.10	-3.58	2.27
55	0.3218	70 806	8.67	-3.48	2.49
60	0.2710	59 627	9.21	-3.39	2.72
65	0.2293	50 436	9.75	-3.30	2.95
70	0.1947	42 844	10.26	-3.22	3.19
75	0.1661	36 544	10.76	-3.14	3.43
80	0.1422	31 294	11.25	-3.06	3.67
85	0.1223	26 901	11.72	-2.99	3.92
90	0.1055	23 210	12.18	-2.92	4.18
95	0.09135	20 096	12.63	-2.85	4.44
100	0.07936	17 460	13.06	-2.78	4.70
105	0.06918	15 220	13.49	-2.71	4.97
110	0.06050	13 310	13.90	-2.65	5.24
115	0.05307	11 676	14.30	-2.59	5.52
120	0.04670	10 273	14.69	-2.53	5.81
125	0.04121	9065	15.08	-2.47	6.09
130	0.03646	8022	15.45	-2.42	6.39
135	0.03235	7117	15.81	-2.37	6.68
140	0.02878	6332	16.17	-2.31	6.99
145	0.02567	5647	16.51	-2.26	7.29
150	0.02295	5049	16.85	-2.22	7.61
155	0.02057	4525	17.18	-2.17	7.92
160	0.01847	4064	17.50	-2.12	8.24
165	0.01663	3659	17.82	-2.08	8.57
170	0.01501	3301	18.13	-2.04	8.90
175	0.01357	2985	18.43	-2.00	9.24
180	0.01229	2704	18.72	-1.95	9.58
185	0.01116	2455	19.01	-1.92	9.92
190	0.01015	2233	19.29	-1.88	10.27
195	0.009247	2034	19.57	-1.84	10.63
200	0.008442	1857	19.84	-1.81	10.99

For technical questions, contact: nlr@vishay.com

THIS DOCUMENT IS SUBJECT TO CHANGE WITHOUT NOTICE. THE PRODUCTS DESCRIBED HEREIN AND THIS DOCUMENT ARE SUBJECT TO SPECIFIC DISCLAIMERS, SET FORTH AT www.vishay.com/doc?91000

THERMISTORS ON BANDOLIER (NTCLG100E2...T)

Bandolier taped according to IEC 60286-1

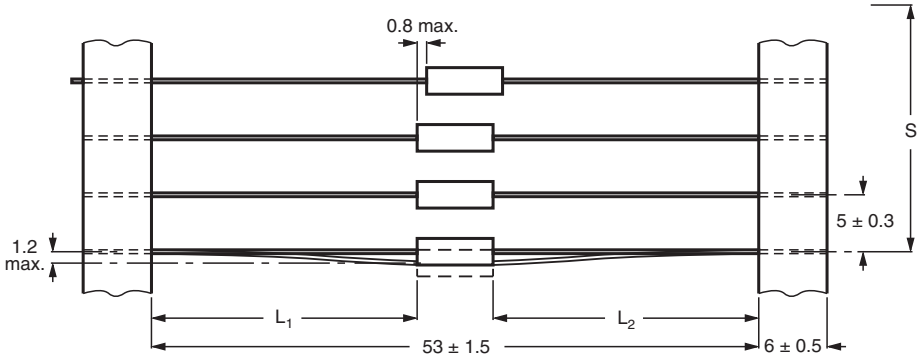

The components are centered so that $|L_1 - L_2| = 1.2$ mm max.

The cumulative space (S) measured over 10 spacings = 50 mm ± 2 mm

For technical questions, contact: nlr@vishay.com
THIS DOCUMENT IS SUBJECT TO CHANGE WITHOUT NOTICE. THE PRODUCTS DESCRIBED HEREIN AND THIS DOCUMENT ARE SUBJECT TO SPECIFIC DISCLAIMERS, SET FORTH AT www.vishay.com/doc?91000

Disclaimer

ALL PRODUCT, PRODUCT SPECIFICATIONS AND DATA ARE SUBJECT TO CHANGE WITHOUT NOTICE TO IMPROVE RELIABILITY, FUNCTION OR DESIGN OR OTHERWISE.

Vishay Intertechnology, Inc., its affiliates, agents, and employees, and all persons acting on its or their behalf (collectively, “Vishay”), disclaim any and all liability for any errors, inaccuracies or incompleteness contained in any datasheet or in any other disclosure relating to any product.

Vishay makes no warranty, representation or guarantee regarding the suitability of the products for any particular purpose or the continuing production of any product. To the maximum extent permitted by applicable law, Vishay disclaims (i) any and all liability arising out of the application or use of any product, (ii) any and all liability, including without limitation special, consequential or incidental damages, and (iii) any and all implied warranties, including warranties of fitness for particular purpose, non-infringement and merchantability.

Statements regarding the suitability of products for certain types of applications are based on Vishay’s knowledge of typical requirements that are often placed on Vishay products in generic applications. Such statements are not binding statements about the suitability of products for a particular application. It is the customer’s responsibility to validate that a particular product with the properties described in the product specification is suitable for use in a particular application. Parameters provided in datasheets and / or specifications may vary in different applications and performance may vary over time. All operating parameters, including typical parameters, must be validated for each customer application by the customer’s technical experts. Product specifications do not expand or otherwise modify Vishay’s terms and conditions of purchase, including but not limited to the warranty expressed therein.

Except as expressly indicated in writing, Vishay products are not designed for use in medical, life-saving, or life-sustaining applications or for any other application in which the failure of the Vishay product could result in personal injury or death. Customers using or selling Vishay products not expressly indicated for use in such applications do so at their own risk. Please contact authorized Vishay personnel to obtain written terms and conditions regarding products designed for such applications.

No license, express or implied, by estoppel or otherwise, to any intellectual property rights is granted by this document or by any conduct of Vishay. Product names and markings noted herein may be trademarks of their respective owners.