TO-8 Hermetic Photocell

NSL-4950

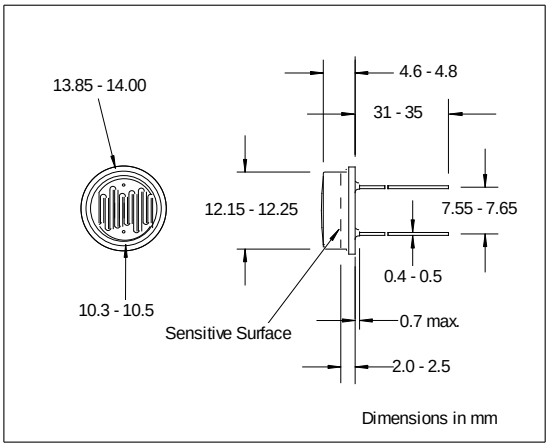

FEATURES

- Passive resistance output
- Hermetic sealed

DESCRIPTION

The NSL-4950 is a light dependent resistor with sensitivity from visibl light region. The photocell is contained in a TO-8 hermetically seale package.

.

APPLICATIONS

- Industrial

ABSOLUTE MAXIMUM RATING

(TA)= 23°C UNLESS OTHERWISE NOTED

SYMBOL	PARAMETER	MIN	MAX	UNITS
V_P	Voltage (peak AC or DC)		320	V
P_d	Power Dissipation @ 25˚C (1)		500	mW
T_{Op}	Operating Temperature	-60	+75	°C
T_{Stg}	Storage Temperature	-60	+75	°C
T_S	Soldering Temperature (2)		+260	°C

Note:

(1) Derate linearly to 0 at 75°C

(2) >0.08" from case for <5 sec.

(3) Cells light adapted at 30 to 50 Ftc for 16 hrs minimum prior to electrical tests.

(4) Print "**NSL-4950**" and date code "**YYWW**".

RELIABILITY

Contact API for recommendations on specific test conditions and procedures.

ELECTRO-OPTICAL CHARACTERISTICS

(TA)= 23°C, UNLESS OTHERWISE NOTED

SYMBOL	CHARACTERISTIC	TEST CONDITIONS	MIN	TYP	MAX	UNITS
R_L	Light Resistance	1 ftc., 2854˚K (3)	24	40	56	KΩ
		100 ftc., 2854˚K (3)		860		Ω
R_D	Dark Resistance	5 sec after removal of test light.	2.4			MΩ
λ_P	Spectral Peak			515		nm

Information in this technical datasheet is believed to be correct and reliable. However, no responsibility is assumed for possible inaccuracies or omission. Specifications are subject to change without notice. © 2014 Advanced Photonix, Inc. All rights reserved.

Advanced Photonix Inc. 1240 Avenida Acaso, Camarillo CA 93012 • Phone (805) 987-0146 • Fax (805) 484-9935 • www.advancedphotonix.com

REV 02/03-15