TO-8 Photocells

Hermetic Package

Features

- Five Photoconductive Materials
- Tolerance: ±40% @1 ftc, ±33% @ 2 ftc

Description

The Silonex TO-8 series of photoconductive provide up to eight standard resistance ranges in CdS or CdSe materials.

Absolute Maximum Ratings

Operating & Storage Temperature	-60°C to +75°C
Power Dissipation @ 25°C (1)	500 mW

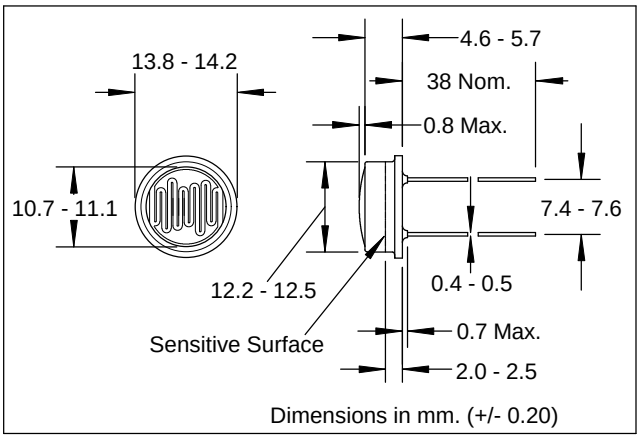

Electrical Characteristics (T_A=25°C, source at 2854°K unless otherwise noted)

Silonex Part No	Sensitive Material	Spectral Peak (nm)	R @ 1 ftc (Kohms) (3)	R @ 2 ftc (Kohms) (3)	R_{TYP} @ 100 ftc (ohms)	Min. R_{DARK} (Kohms) (2)	V_{MAX} (Volts) (peak AC or DC)
NSL-4910	Type 4 CdS	515	9.3		150	560	80
NSL-4920			4.0		80	250	80
NSL-4930			1.7		50	100	80
NSL-4940			0.725		30	50	80
NSL-4950			40		860	2400	320
NSL-4960			17		500	1000	320
NSL-4970			7.25		260	400	320
NSL-4980			114		2500	6800	320
NSL-5910	Type 5 CdS	550		1.5	150	100	170
NSL-5920				3.0	300	200	170
NSL-5930				6.0	500	400	250
NSL-5940				9.0	700	600	250
NSL-6910	Type 6 CdSe	690		0.25	25	67	170
NSL-6920				0.51	50	300	170
NSL-6930				1.02	100	680	170
NSL-6940				1.5	150	1000	250
NSL-7910	Type 7 CdS	615		7.5	800	1500	250

Specifications subject to change without notice

103286 REV 2

Notes:

(1) derate linearly to zero at 75°C.
(2) 5 sec. after removal of test light.
(3) cells light adapted at 30 to 50 Ftc for 16 hrs minimum prior to electrical tests.

5200 St. Patrick St., Montreal
Que., H4E 4N9, Canada
Tel: 514-768-8000
Fax: 514-768-8889

The Old Railway, Princes Street
Ulverston, Cumbria, LA12 7NQ, UK
Tel: 01 229 581 551
Fax: 01 229 581 554