

NS4148 Data Sheet V1.1

ShenZhen Nsiway Technology Co., Ltd

2010,11

Change History

DATA	VERSION	AUTHOR	CHAGE EXPLAIN

CONTENTS

CHANGE HISTORY 2
GENERAL DESCRIPTION 5
FEATURES 5
APPLICATIONS 5
TYPICAL APPLICATION CIRCUIT 5
ABSOLUTE MAXIMUM RATINGS 6
ELECTRICAL CHARACTERISTICS 6
PIN CONFIGURATION 7
PIN LAYOUT 7
PIN DISCRIPTION 8
MARKING INFORMATION 8
TYPICAL CHARACTERISTICS 9
APPLICATION INFORMATION 11
BLOCK DIAGRAM 11
DIGITAL AMPLIFIER FUNCTION 12
POP NOISE REDUCTION FUNCTION 12
EMI ENHANCEMENT TECHNOLOGY 12
CTRL TERMINAL FUNCTION 12
EFFICIENCY 13
BYPASS TERMINAL OUTPUT 13
PROTECTION FUNCTION 13
DESCRIPTION OF OPERATING FUNCTIONS 13
WHEN TO USE AN OUTPUT FILTER 14
PHYSICAL DIMENSIONS 15
THE PACKAGE OF MSOP-8 15
THE PACKAGE OF SOP-8 16

FIGURE LISTS

Figure1. NS4148 Typical Application Circuit 5
Figure2. MSOP-8 and SOP-8 Package(top view) 8
Figure3. The block diagram of NS4148 11
Figure4. EMI test frequency spectrum 12
Figure5. Differential input 13
Figure6. Single input 14
Figure7. Typical Ferrite Chip Bead Filter 14
Figure8. The Package of MSOP-8 15
Figure9. The Package of SOP-8 16

TABLE LISTS

Table1.Absolute Maximum Ratings 6
Table2. Electrical Characteristics（TA＝25oC） 6
Table3. Pin Discription 8
Table7.Working mode 12

General Description

The NS4148 is a,Low EMI,Filterless,3W Mono Class D Audio Amplifier. The NS4148 original Enhanced Emission Elimination which reduces EMI-radiated emissions. Filterless Amplifier Passes FCC Radiated Emissions Standards with 100mm of Cable.

The NS4148 has the power-down function which can minimize the power consumption in the standby state.As for protection function, overcurrent protection function for speaker output terminal, overtemperatue protection function for inside of the device, and low supply voltage malfunction preventing function are prepared. while offering efficiencies above 90%. A patented, low-EMI modulation scheme renders the traditional class D output filter unnecessary, conserving board space.

The NS4148 is available in MSOP-8 and SOP-8 package and is specified over the -40℃ to +85℃ temperature range.

Features

- Improved pop & click circuitry eliminates noise during turn-on and turn-off transitions
- Power Output at 5.0V, 10% THD+N, 4Ω 3W (typ)
- 0.05%THD+N（1W、5.0V）
- Filterless Class D
- 90% Efficiency
- High PSRR (80dB at 217Hz)
- 3.5-mA Quiescent Current
- 2.2- 5.25V operation
- Over-current, Thermal and Low voltage Malfunction Protection function
- Packages: MSOP-8 and SOP-8

Applications

- Cellular Handsets
- Digital Camera
- PDAs
- Portable Information Appliances(MP3/MP4/DFP/Portable DVD)

Typical Application Circuit

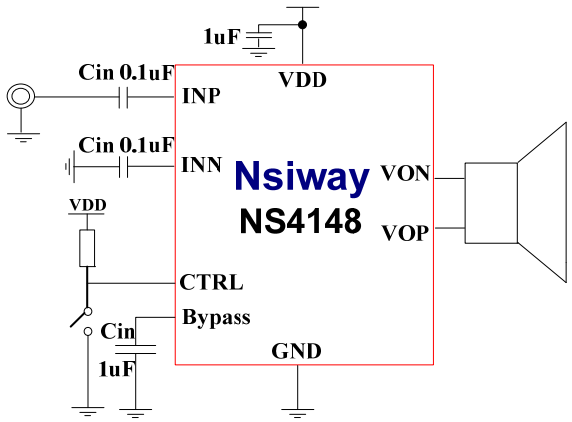

Figure1.NS4148 Typical Application Circuit

Absolute Maximum Ratings

Table1.Absolute Maximum Ratings

Parameter		Min	Max	Unit	Note
Supply Voltage VDD		-0.3	6.0	V	
INP，INN，CTRL		-0.3	V_{DD}+0.3	V	
Junction Temperature			125	℃	
Storage Temperature		-65	150	℃	
Lead Temperature (Soldering 10 Seconds0)			260	℃	
Package Thermal Resistance θ_{JA}			90	℃/W	
Operating Ambient Temperature		-40	85	℃	
ESD Rating			8000	V	Human Body Model
Latch-up	+IT		150	mA	JEDEC STANDARD NO.78A FEBURARY 2006
	-IT		-150	mA	

Note1: Stresses beyond those listed under "absolute maximum ratings" may cause permanent damage to the device. These are stress ratings only and functional operation of the device at these or any other conditions beyond those indicated under "recommended operating conditions" is not implied. Exposure to absolute-maximum-rated conditions for extended periods may affect device reliability.

Electrical Characteristics

Table2. Electrical Characteristics（TA＝25oC）

Symbol	Parameter	Conditions	Min	Typ	Max	Units
|VOS|	Output offset voltage	VIN=0V，AV=9V/V，VDD =2.2V to 5.25V		5	20	mV
IQ	Quiescent Current	VDD =3.6V		3.5		mA
ISD	Shutdown Current	VDD =3.6V，CTRL=0V		0.1		μA
PSRR	Power-Supply Rejection Ratio	217Hz			-80	dB
		20KHz			-72	dB
CMRR	Common-Mode Rejection Ratio			-70		dB

fSW	Carrier clock frequency	VDD =2.2V to 5.25V		400		kHz
AV	Voltage Gain			19		dB
Po	Output Power	THD+N=10%，f=1kHz，RL =4Ω，VDD =5V		3.0		W
		THD+N=1%，f=1kHz，RL =4Ω，VDD =5V		2.1		W
		THD+N=10%，f=1kHz，RL =8Ω，VDD =5V		1.8		W
		THD+N=1%，f=1kHz，RL =8Ω，VDD =5V		1.3		W
THD+N	Total Harmonic Distortion Plus Noise	VDD =5V，Po=0.5W，RL =8Ω，f=1kHz		0.05		%
		VDD =5V，Po=1W，RL=4Ω，f=1kHz		0.05		%
η	Efficiency	Po=1W，RL =8Ω，f=1kHz		90		%
VIH	CTRL High voltage		1.2		VDD	V
VIL	CTRL Low voltage		0		0.2	V
tST	Start-up time (Power-down release)			30		ms
twk	Wake-up mode setting time		35			ms
tSD	Power down setting time		80			ms

Pin Configuration

Pin Layout

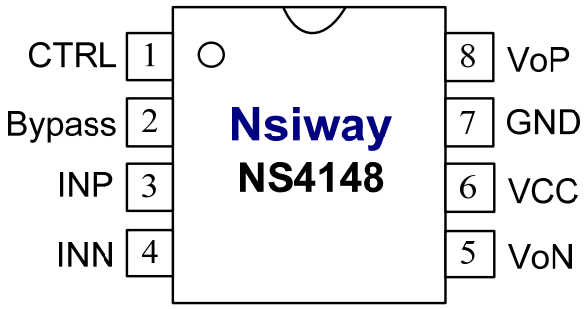

Figure2.MSOP-8 and SOP-8 Package(top view)

Pin Discription

Table3. Pin Discription

Pin NO.	Pin Name	Description
1	CTRL	Power down control terminal
2	Bypass	Analog reference power supply terminal
3	INP	Positive input terminal (differential +)
4	INN	Negative input terminal (differential -)
5	VoN	Negative output terminal (differential -)
6	VCC	Power supply
7	GND	Ground
8	VoP	Positive output terminal (differential +)

Marking Information



NS: Corporation Code
4148: Partino 4148
YYWW: Date Code

Typical Characteristics

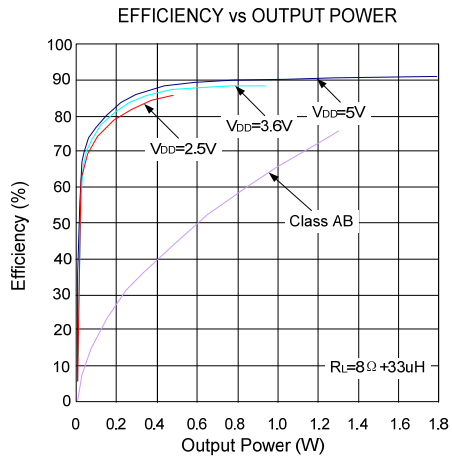

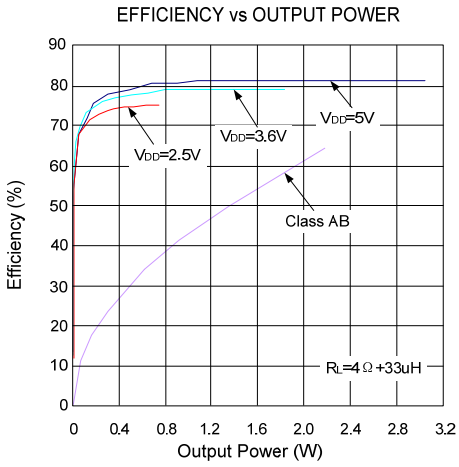

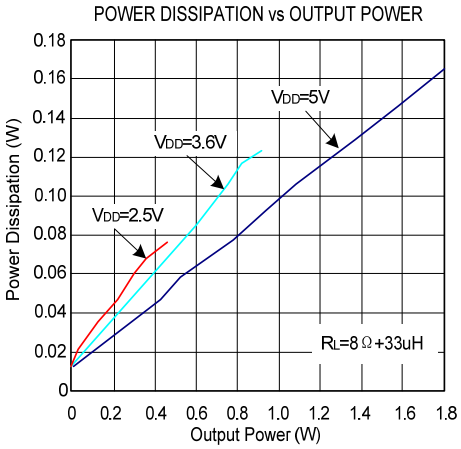

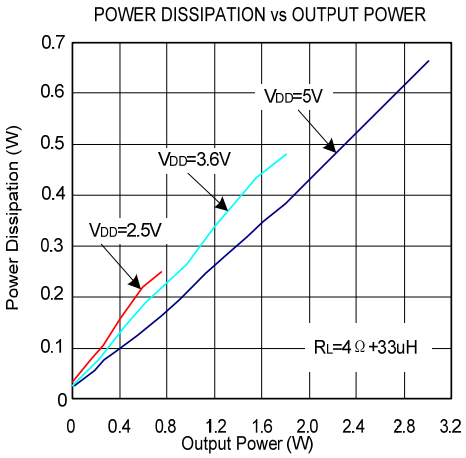

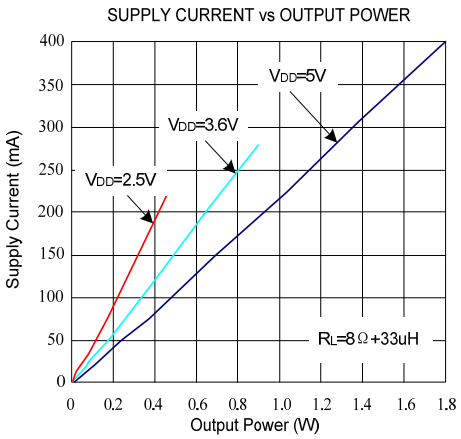

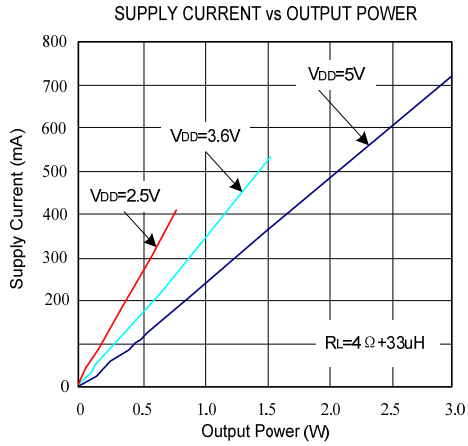

THD+N vs FREQUENCY

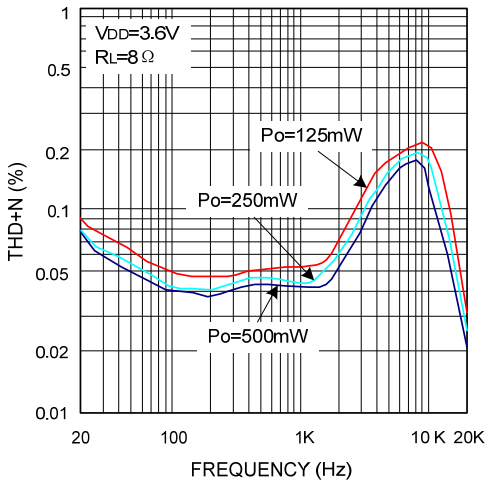

THD+N vs FREQUENCY

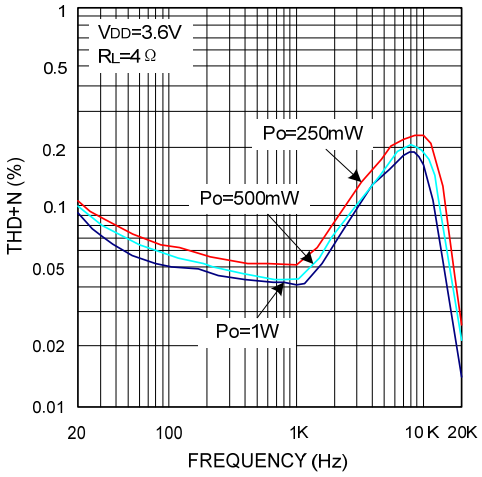

THD+N vs OUTPUT POWER

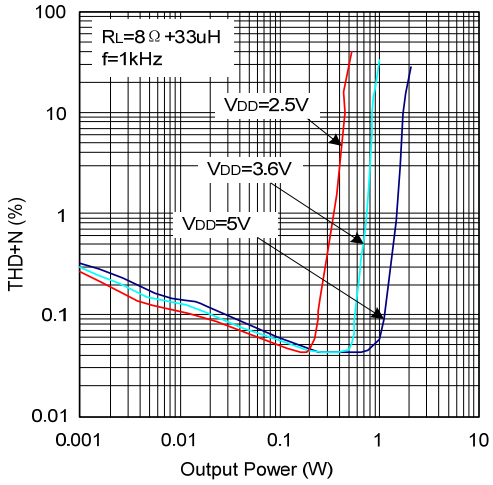

THD+N vs OUTPUT POWER

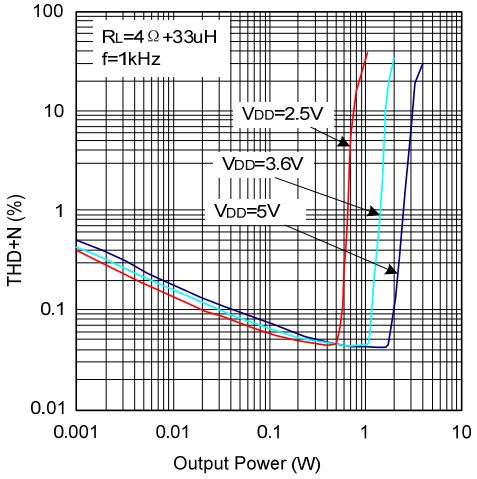

OUTPUT POWER vs SUPPLY VOLTAGE

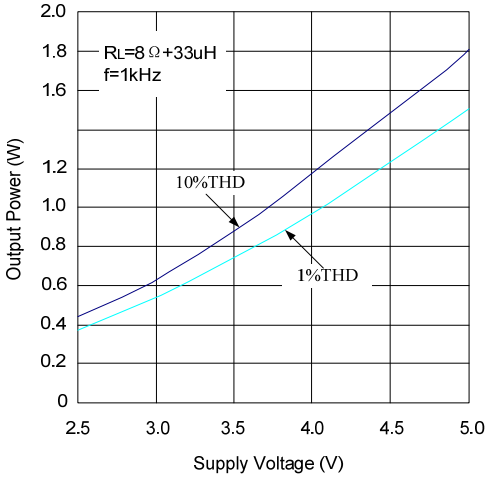

OUTPUT POWER vs SUPPLY VOLTAGE

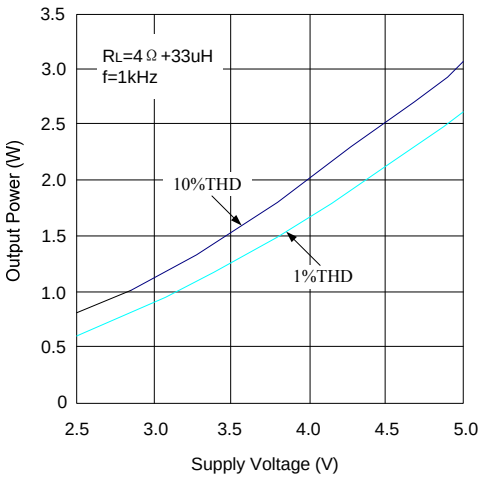

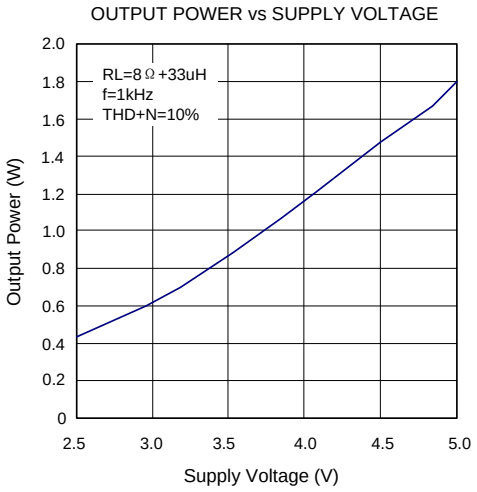

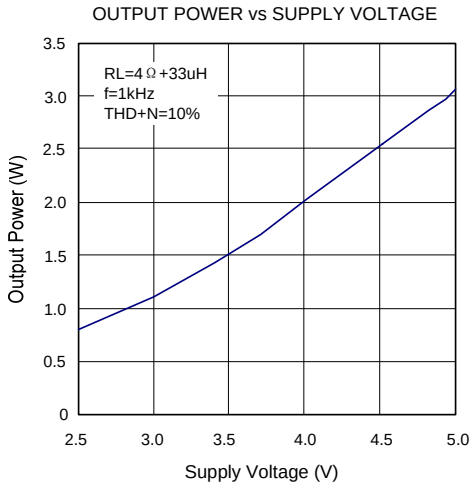

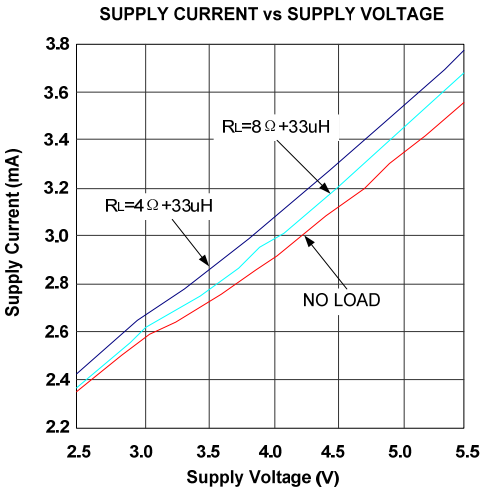

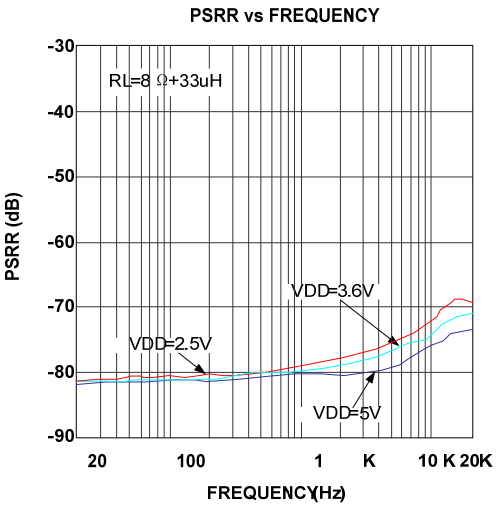

Application Information

Block Diagram

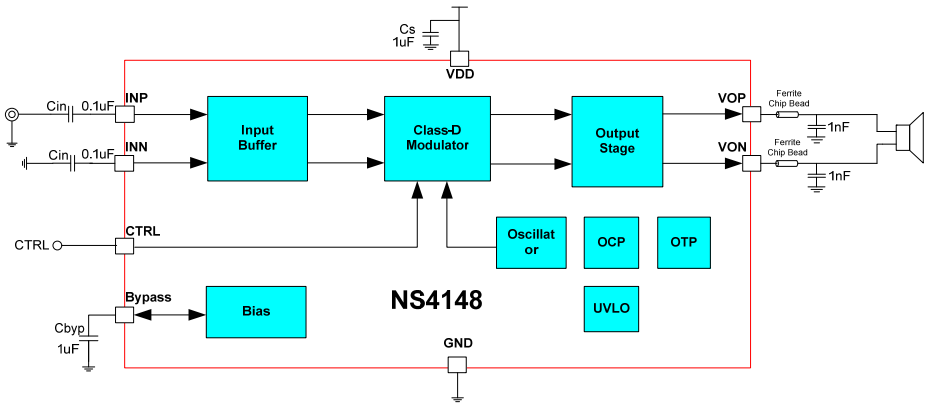

Figure3.The block diagram of NS4148

Digital Amplifier Function

The NS4148 has digital amplifiers with analog input, PWM pulse output, and maximum output of 3W(RL=4Ω)×1ch.Distortion of PWM pulse output signal and noise of the signal is reduced by adopting "Pure Pulse Direct Speaker Drive Circuit".

In addition, NS4148 has been designed so that high-efficiency can be maintained within an average power range (100mW or so) that is used for mobile terminal.

Pop noise reduction function

The Pop Noise Reduction Function works in the cases of Power-on, Power-off, Power-down on, and Power-down off.And, the pop-noise can be suppressed according to control the power down by the following procedure.

- Power down mode is cancelled after power-on and the power supply is stabilized enough.
- Power down mode is set before Power-off.

EMI enhancement technology

NS4148 uses proprietary technology, for the high-frequency transient signals were fully addressed, greatly reduces EMI interference within the whole bandwidth. as shown in Figure 5.

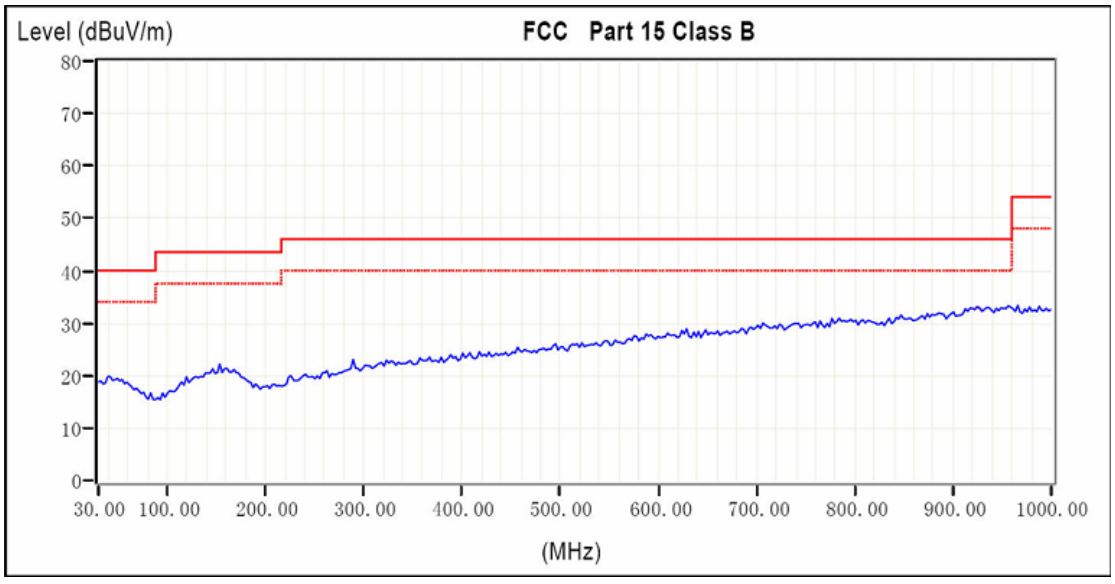

Figure4.EMI test frequency spectrum

CTRL terminal function

Only a switching control between open mode and Power-down mode is available when a single control terminal is used.

Table7.Working mode

CTRL	Mode
H	Open
L	Shutdown

Efficiency

The theoretical best efficiency of a linear amplifier is 78%; however, that efficiency is only exhibited at peak output powers. Under normal operating levels (typical music reproduction levels), efficiency falls below 30%, whereas the NS4148 still exhibits >90% efficiencies under the same conditions.

Bypass terminal output

The voltage of VDD/2 is output from the bypass terminal. Capacitor (1μF) is connected between the bypass terminal and GND for stabilization.

Protection Function

NS4148 has the following protection functions for the digital amplifier: Over-current Protection function, Thermal Protection function, and Low voltage Malfunction Prevention function.

Over-current Protection function

This is the function to establish the over-current protection mode when detecting a short circuit between NS4148 differential output terminal and VSS, VDD, or another differential output. In the over current protection mode, the differential output terminal becomes a high impedance state.The over current protection mode can be cancelled by power down or turning on the power again.

Thermal Protection function

This is the function to establish the thermal protection mode when detecting excessive high temperature of NS4148 itself.In the thermal protection mode, the differential output terminal becomes Weak Low state (a state grounded through high resistivity). And, when NS4148 gets out of such condition, the protection mode is cancelled.

Description of operating functions

For a differential input, input signals to IN+ and IN- pins via DC-cut capacitors (CIN).

The input signal gain is +18dB. And, with an input impedance of 25kΩ (typ.), a lower cut-off frequency of an input signal becomes 64Hz at CIN=0.1uF.

For a single-ended input, input a signal to IN+ via a DC-cut capacitor (CIN). At this time, IN- pin should be connected to AVSS via a DC-cut capacitor (CIN) with the same capacitance. Gain and a lower Cut-off frequency are the same as the above case.

In addition, the output impedance (Zout) of the former source circuit, including signal paths up to INL+ terminal and INterminal should be designed to become 600Ω or lower. By limiting supply voltage VDD, operating ambient temperature Ta, DC-cut capacitor CIN, and power-down setting timeTPD,gain can be set by the control of the input resistance. For details, please contact us.

Use a capacitance of 0.1μF or less as a DC-cut capacitor (CIN) to reduce pop noise.

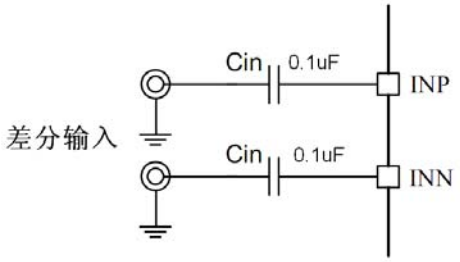

Figure5.Differential input

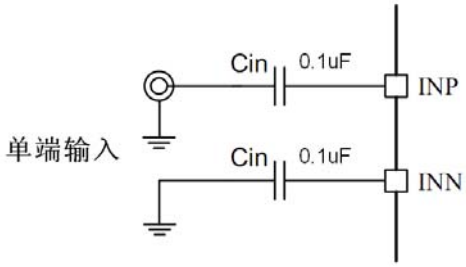

Figure6.Single input

When to Use an Output Filter

Design the NS4148 without an output filter if the traces from amplifier to speaker are short. The NS4148 passed FCC and CE radiated emissions with no shielding with speaker trace wires 100 mm long or less.Wireless handsets and PDAs are great applications for class-D without a filter.

A ferrite bead filter can often be used if the design is failing radiated emissions without an LC filter, and thefrequency sensitive circuit is greater than 1 MHz. This is good for circuits that just have to pass FCC and CE because FCC and CE only test radiated emissions greater than 30 MHz. If choosing a ferrite bead, choose one with high impedance at high frequencies, but very low impedance at low frequencies.

Use an LC output filter if there are low frequency (< 1 MHz) EMI sensitive circuits and/or there are long leads from amplifier to speaker.

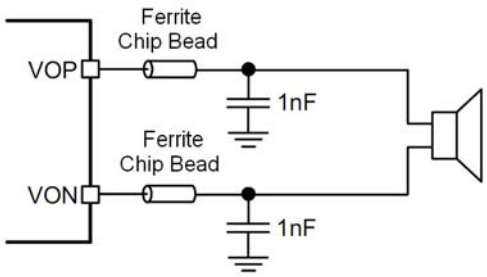

Figure7.Typical Ferrite Chip Bead Filter

Physical Dimensions

The Package of MSOP-8

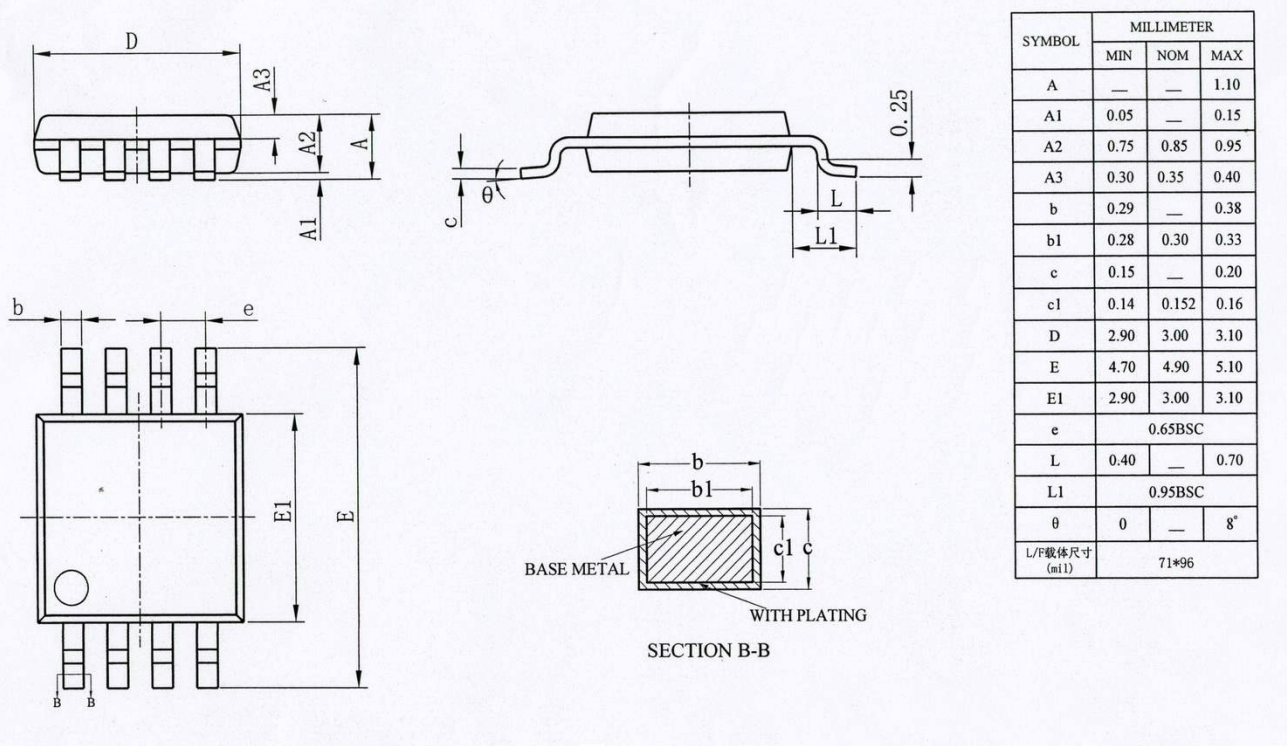

SYMBOL	MILLIMETER		
	MIN	NOM	MAX
A	—	—	1.10
A1	0.05	—	0.15
A2	0.75	0.85	0.95
A3	0.30	0.35	0.40
b	0.29	—	0.38
b1	0.28	0.30	0.33
c	0.15	—	0.20
c1	0.14	0.152	0.16
D	2.90	3.00	3.10
E	4.70	4.90	5.10
E1	2.90	3.00	3.10
e	0.65BSC		
L	0.40	—	0.70
L1	0.95BSC		
θ	0	—	8°
L/F载体尺寸 (mil)	71*96		

Figure8.The Package of MSOP-8

The Package of SOP-8

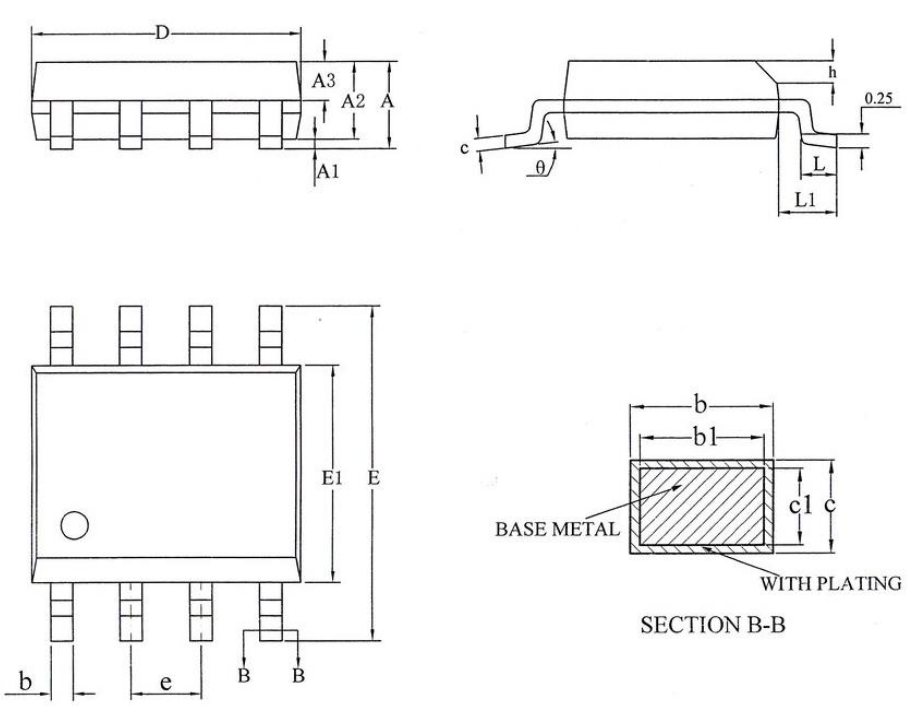

SYMBOL	MILLIMETER		
	MIN	NOM	MAX
A	—	—	1.75
A1	0.10	—	0.225
A2	1.30	1.40	1.50
A3	0.60	0.65	0.70
b	0.39	—	0.48
b1	0.38	0.41	0.43
c	0.21	—	0.26
c1	0.19	0.20	0.21
D	4.70	4.90	5.10
E	5.80	6.00	6.20
E1	3.70	3.90	4.10
e	1.27BSC		
h	0.25	—	0.50
L	0.50	—	0.80
L1	1.05BSC		
θ	0	—	8°
L/F载体尺寸 (mil)	60*60		95*130
	80*80		112*169
	90*90		100*158
	80*112(双载体)		

Figure9.The Package of SOP-8

Notice：Shenzhen Nsiway Co. LTD. Reserve the right to modify the datasheet at anytime,and without notice, Only Shenzhen Nsiway Co. LTD. have the right to explain the content in this datasheet.