DATA SHEET

NEC

MOS FIELD EFFECT TRANSISTOR

NP80N055EHE, NP80N055KHE
NP80N055CHE, NP80N055DHE, NP80N055MHE, NP80N055NHE

SWITCHING
N-CHANNEL POWER MOS FET

DESCRIPTION

These products are N-channel MOS Field Effect Transistors designed for high current switching applications.

<R> **ORDERING INFORMATION**

PART NUMBER	LEAD PLATING	PACKING	PACKAGE
NP80N055EHE-E1-AY Note1, 2	Pure Sn (Tin)	Tape 800 p/reel	TO-263 (MP-25ZJ) typ. 1.4 g
NP80N055EHE-E2-AY Note1, 2			
NP80N055KHE-E1-AY Note1			TO-263 (MP-25ZK) typ. 1.5 g
NP80N055KHE-E2-AY Note1			
NP80N055CHE-S12-AZ Note1, 2	Sn-Ag-Cu	Tube 50 p/tube	TO-220 (MP-25) typ. 1.9 g
NP80N055DHE-S12-AY Note1, 2	Pure Sn (Tin)		TO-262 (MP-25 Fin Cut) typ. 1.8 g
NP80N055MHE-S18-AY Note1			TO-220 (MP-25K) typ. 1.9 g
NP80N055NHE-S18-AY Note1			TO-262 (MP-25SK) typ. 1.8 g

Notes 1. Pb-free (This product does not contain Pb in the external electrode.)

2. Not for new design

FEATURES

- Channel temperature 175 degree rated
- Super low on-state resistance

  $R_{DS(on)}$ = 11 mΩ MAX. (V_{GS} = 10 V, I_D = 40 A)
- Low input capacitance

  C_{iss} = 2400 pF TYP.
- Built-in gate protection diode

(TO-220)

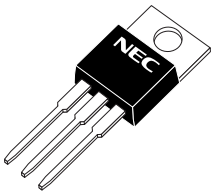

(TO-262)

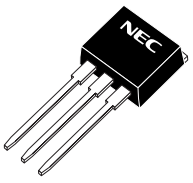

(TO-263)

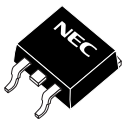

The information in this document is subject to change without notice. Before using this document, please confirm that this is the latest version.
Not all products and/or types are available in every country. Please check with an NEC Electronics sales representative for availability and additional information.

Document No. D14096EJ7V0DS00 (7th edition)
Date Published October 2007 NS
Printed in Japan

© NEC Electronics Corporation 2002, 2007

The mark <R> shows major revised points.
The revised points can be easily searched by copying an "<R>" in the PDF file and specifying it in the "Find what:" field.

ABSOLUTE MAXIMUM RATINGS (T_A = 25°C)

Drain to Source Voltage (V_{GS} = 0 V)	V_{DSS}	55	V
Gate to Source Voltage (V_{DS} = 0 V)	V_{GSS}	±20	V
Drain Current (DC) (T_C = 25°C) Note1	$I_{D(DC)}$	±80	A
Drain Current (Pulse) Note2	$I_{D(pulse)}$	±200	A
Total Power Dissipation (T_A = 25°C)	P_T	1.8	W
Total Power Dissipation (T_C = 25°C)	P_T	120	W
Channel Temperature	T_{ch}	175	°C
Storage Temperature	T_{stg}	−55 to +175	°C
Single Avalanche Current Note3	I_{AS}	45/31/10	A
Single Avalanche Energy Note3	E_{AS}	2.0/96/100	mJ

Notes 1. Calculated constant current according to MAX. allowable channel temperature.

2. PW ≤ 10 μs, Duty cycle ≤ 1%

3. Starting T_{ch} = 25°C, V_{DD} = 28 V, R_G = 25 Ω, V_{GS} = 20 → 0 V (See **Figure 4.**)

THERMAL RESISTANCE

Channel to Case Thermal Resistance	$R_{th(ch-C)}$	1.25	°C/W
Channel to Ambient Thermal Resistance	$R_{th(ch-A)}$	83.3	°C/W

ELECTRICAL CHARACTERISTICS (T_A = 25°C)

CHARACTERISTICS	SYMBOL	TEST CONDITIONS	MIN.	TYP.	MAX.	UNIT
Zero Gate Voltage Drain Current	I_{DSS}	V_{DS} = 55 V, V_{GS} = 0 V			10	μA
Gate Leakage Current	I_{GSS}	V_{GS} = ±20 V, V_{DS} = 0 V			±10	μA
Gate to Source Threshold Voltage	$V_{GS(th)}$	V_{DS} = V_{GS}, I_D = 250 μA	2.0	3.0	4.0	V
Forward Transfer Admittance	$\|y_{fs}\|$	V_{DS} = 10 V, I_D = 40 A	12	30		S
Drain to Source On-state Resistance	$R_{DS(on)}$	V_{GS} = 10 V, I_D = 40 A		8.2	11	mΩ
Input Capacitance	C_{iss}	V_{DS} = 25 V,		2400	3600	pF
Output Capacitance	C_{oss}	V_{GS} = 0 V,		380	570	pF
Reverse Transfer Capacitance	C_{rss}	f = 1 MHz		180	330	pF
Turn-on Delay Time	$t_{d(on)}$	V_{DD} = 28 V, I_D = 40 A,		25	55	ns
Rise Time	t_r	V_{GS} = 10 V,		13	32	ns
Turn-off Delay Time	$t_{d(off)}$	R_G = 1 Ω		45	91	ns
Fall Time	t_f			13	33	ns
Total Gate Charge	Q_G	V_{DD} = 44 V,		40	60	nC
Gate to Source Charge	Q_{GS}	V_{GS} = 10 V,		12		nC
Gate to Drain Charge	Q_{GD}	I_D = 80 A		16		nC
Body Diode Forward Voltage	$V_{F(S-D)}$	I_F = 80 A, V_{GS} = 0 V		1.0		V
Reverse Recovery Time	t_{rr}	I_F = 80 A, V_{GS} = 0 V,		49		ns
Reverse Recovery Charge	Q_{rr}	di/dt = 100 A/μs		90		nC

TEST CIRCUIT 1 AVALANCHE CAPABILITY

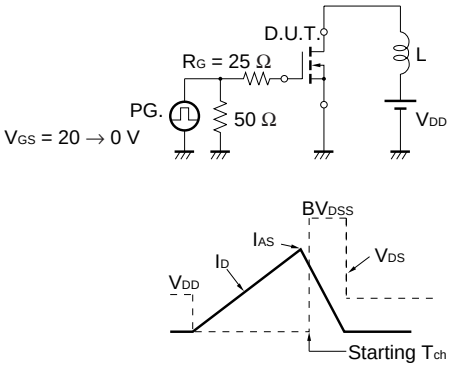

TEST CIRCUIT 2 SWITCHING TIME

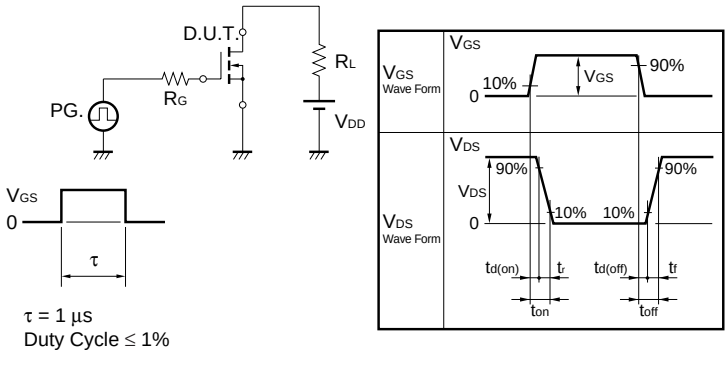

TEST CIRCUIT 3 GATE CHARGE

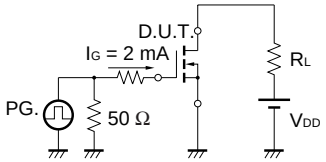

TYPICAL CHARACTERISTICS (T_A = 25°C)

Figure1. DERATING FACTOR OF FORWARD BIAS SAFE OPERATING AREA

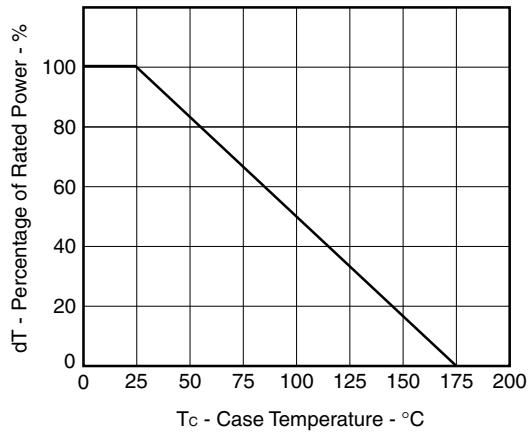

Figure2. TOTAL POWER DISSIPATION vs. CASE TEMPERATURE

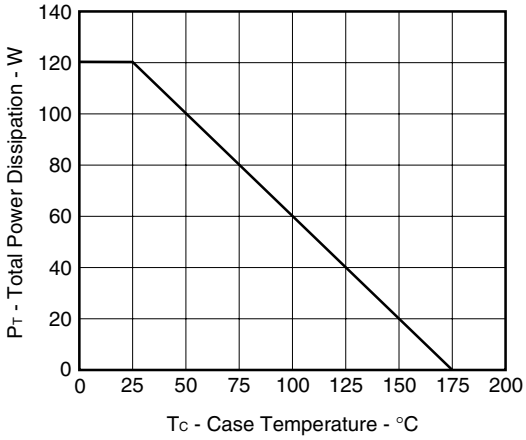

Figure3. FORWARD BIAS SAFE OPERATING AREA

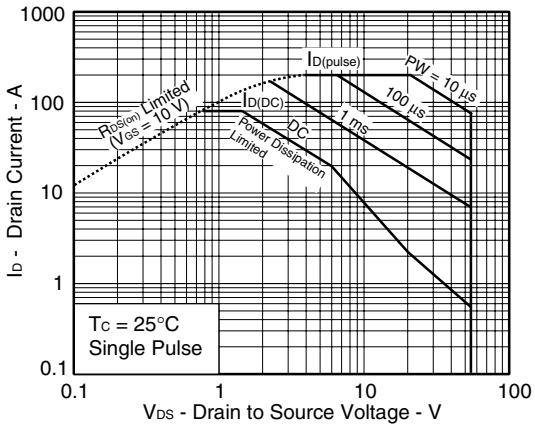

Figure4. SINGLE AVALANCHE ENERGY DERATING FACTOR

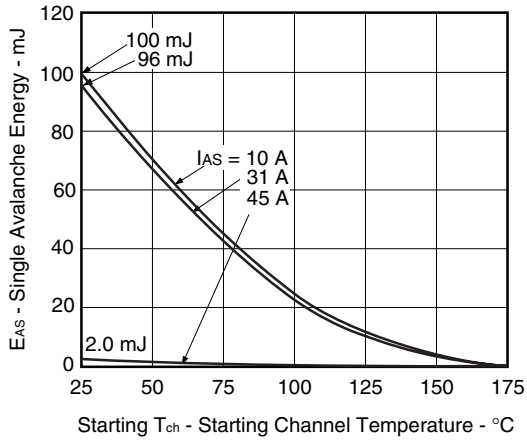

Figure5. TRANSIENT THERMAL RESISTANCE vs. PULSE WIDTH

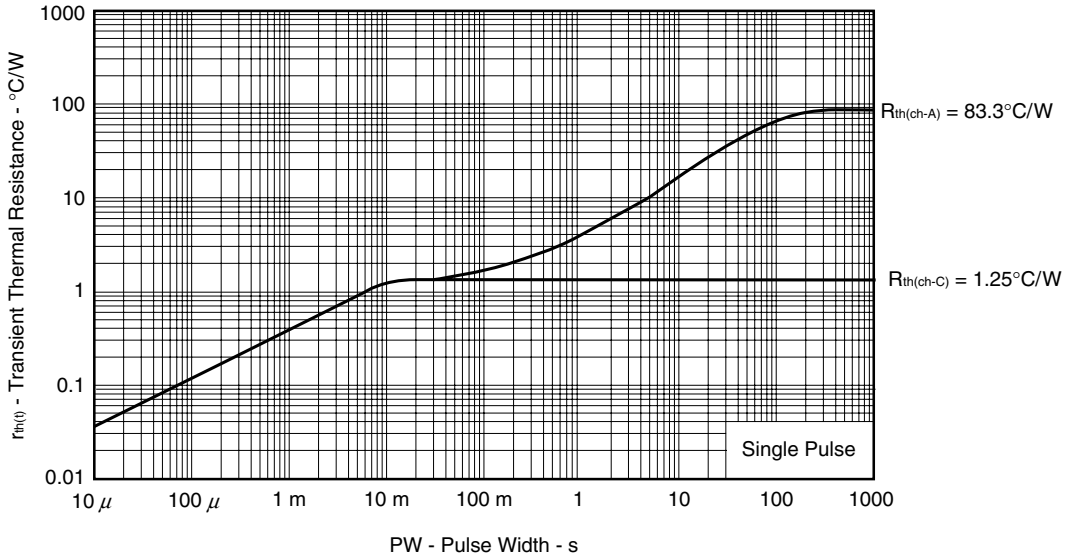

Figure6. FORWARD TRANSFER CHARACTERISTICS

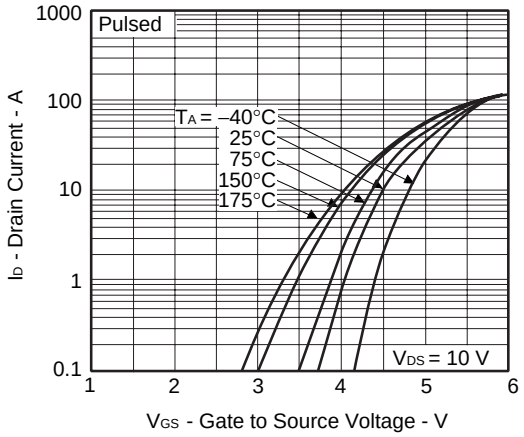

Figure7. DRAIN CURRENT vs.
DRAIN TO SOURCE VOLTAGE

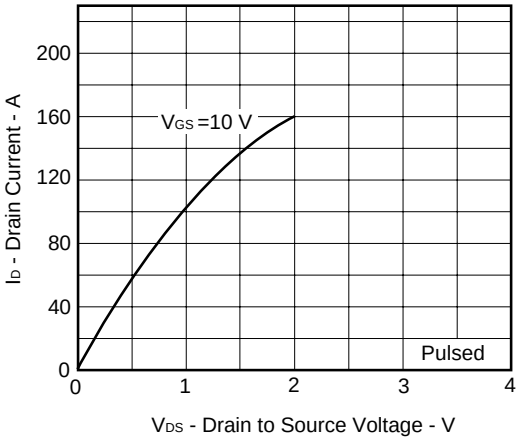

Figure8. FORWARD TRANSFER ADMITTANCE vs.
DRAIN CURRENT

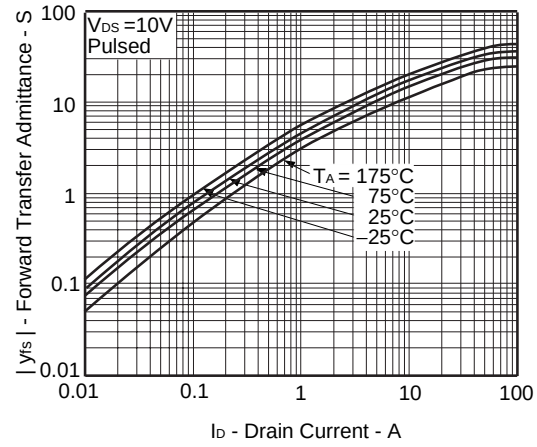

Figure9. DRAIN TO SOURCE ON-STATE RESISTANCE vs.
GATE TO SOURCE VOLTAGE

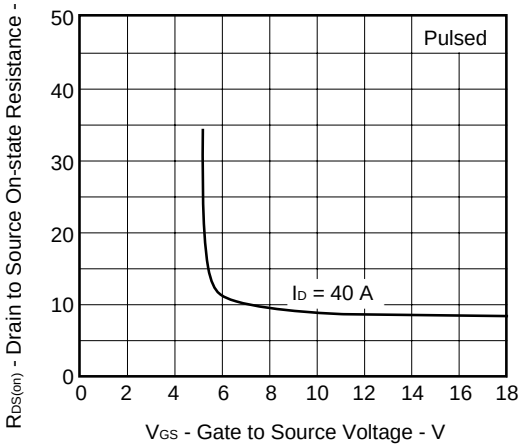

Figure10. DRAIN TO SOURCE ON-STATE
RESISTANCE vs. DRAIN CURRENT

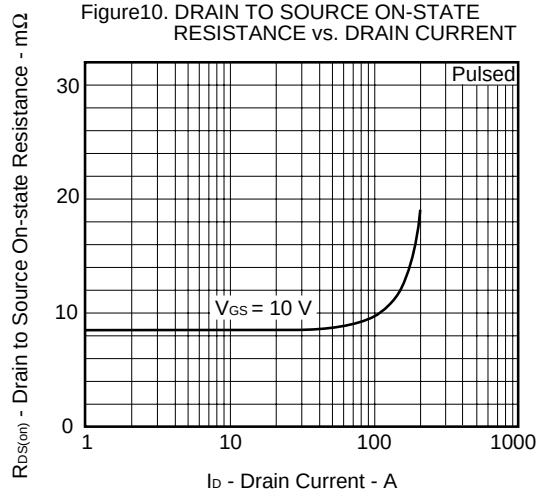

Figure11. GATE TO SOURCE CUT-OFF VOLTAGE vs.
CHANNEL TEMPERATURE

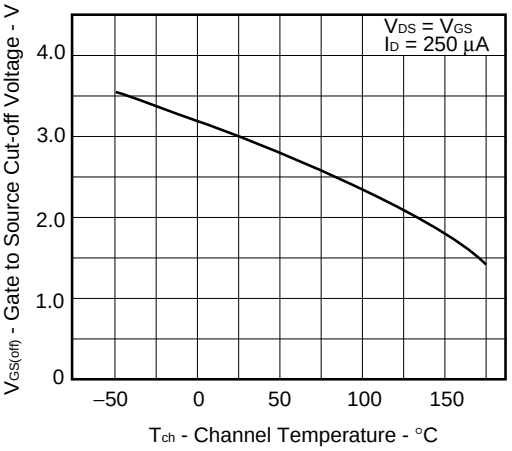

Figure12. DRAIN TO SOURCE ON-STATE RESISTANCE vs. CHANNEL TEMPERATURE

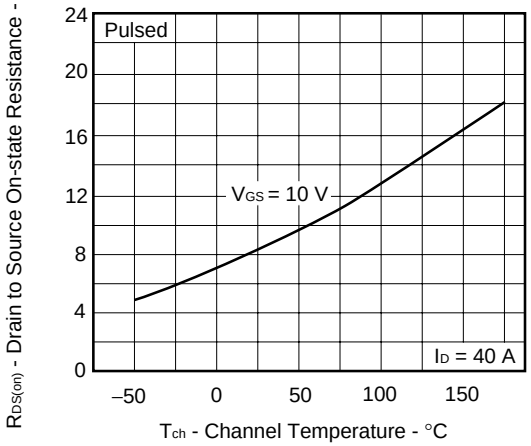

Figure13. SOURCE TO DRAIN DIODE FORWARD VOLTAGE

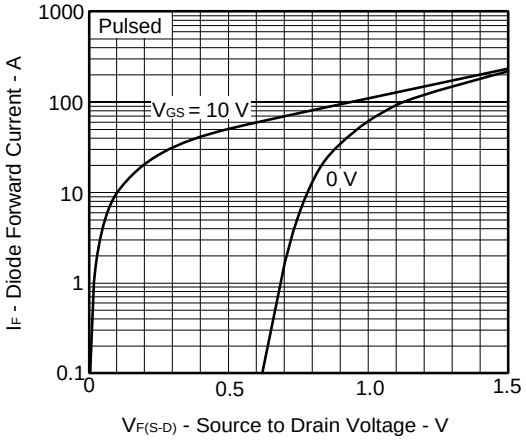

Figure14. CAPACITANCE vs. DRAIN TO SOURCE VOLTAGE

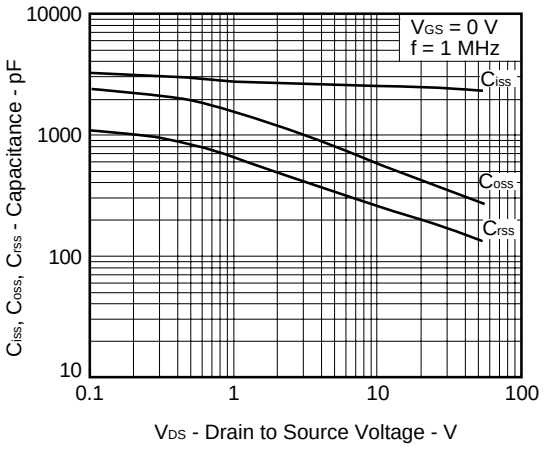

Figure15. SWITCHING CHARACTERISTICS

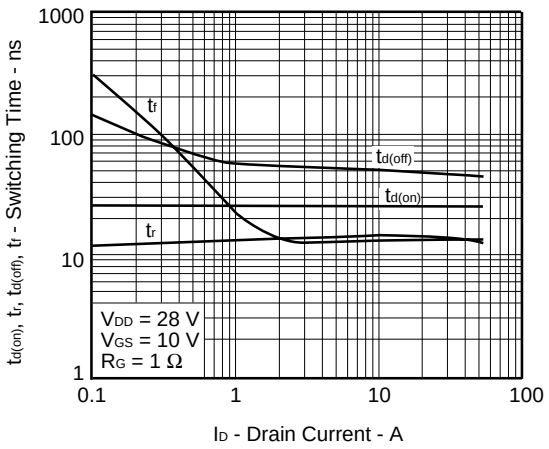

Figure16. REVERSE RECOVERY TIME vs. DIODE FORWARD CURRENT

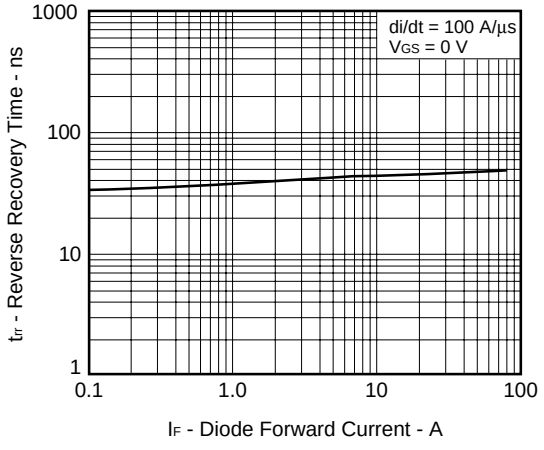

Figure17. DYNAMIC INPUT/OUTPUT CHARACTERISTICS

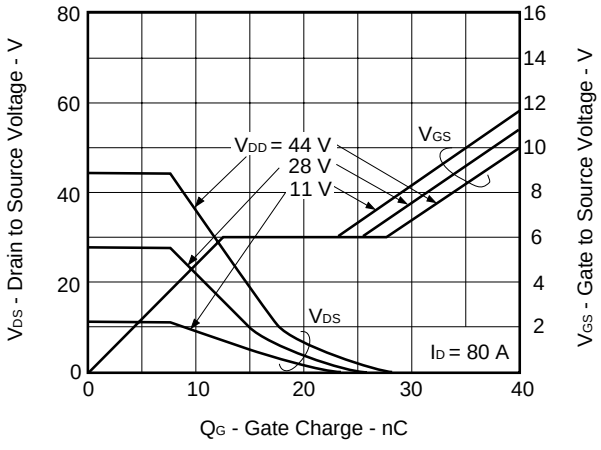

<R> **PACKAGE DRAWINGS (Unit: mm)**

1)TO-263 (MP-25ZJ) Note

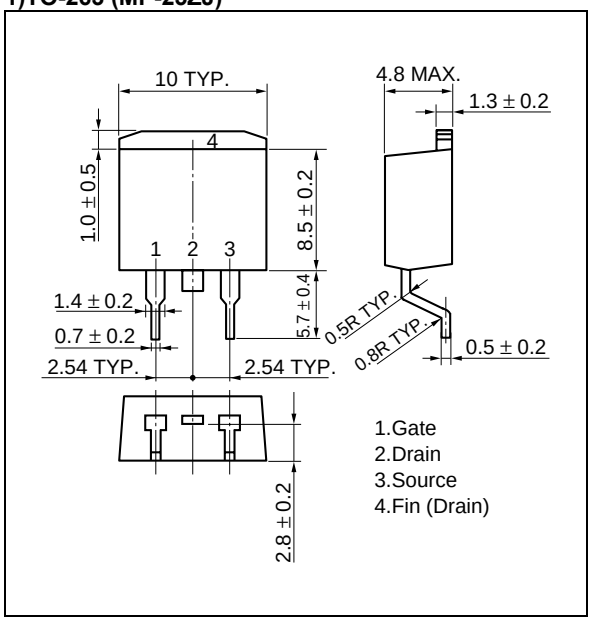

2)TO-263 (MP-25ZK)

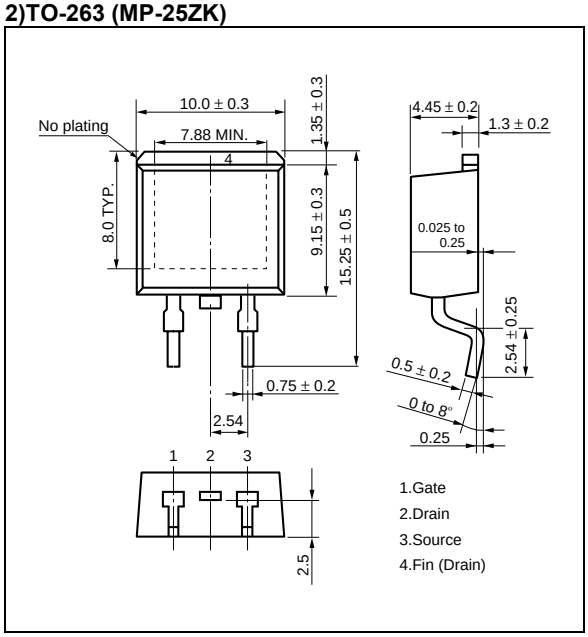

3)TO-220 (MP-25) Note

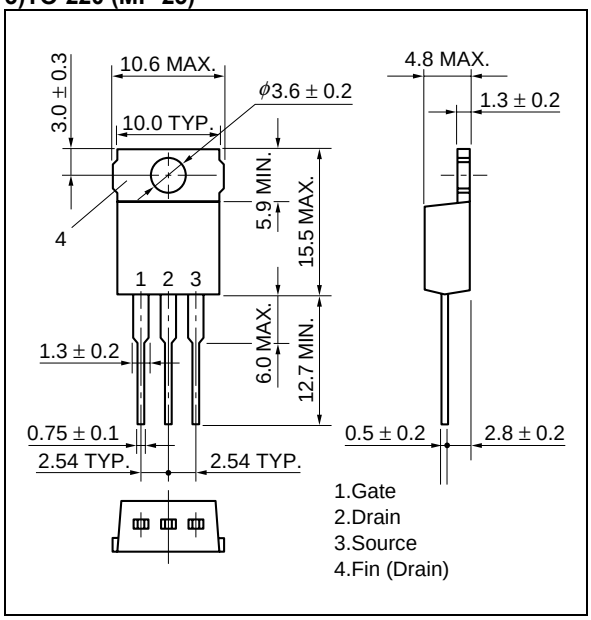

4)TO-262 (MP-25 Fin Cut) Note

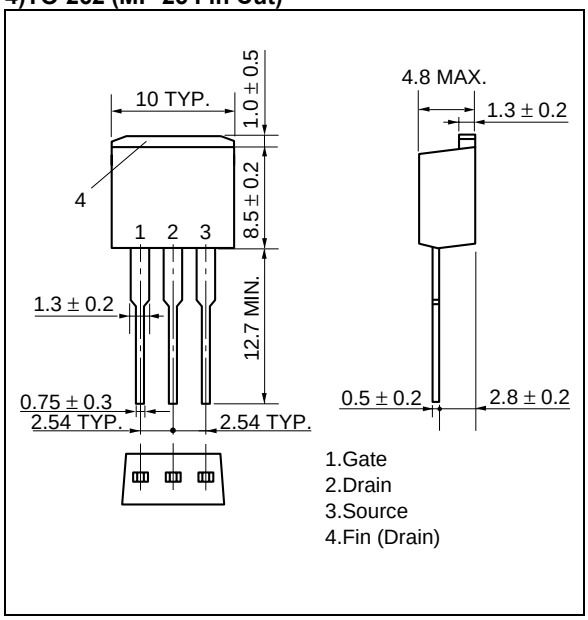

Note Not for new design

5)TO-220 (MP-25K)

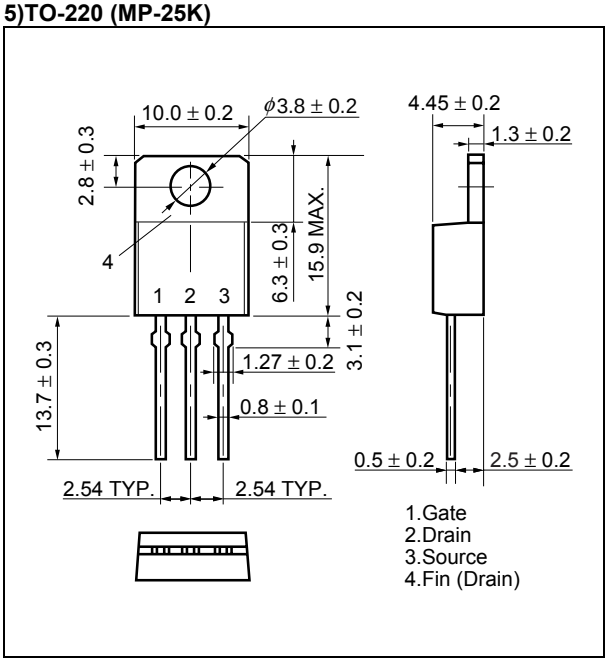

6)TO-262 (MP-25SK)

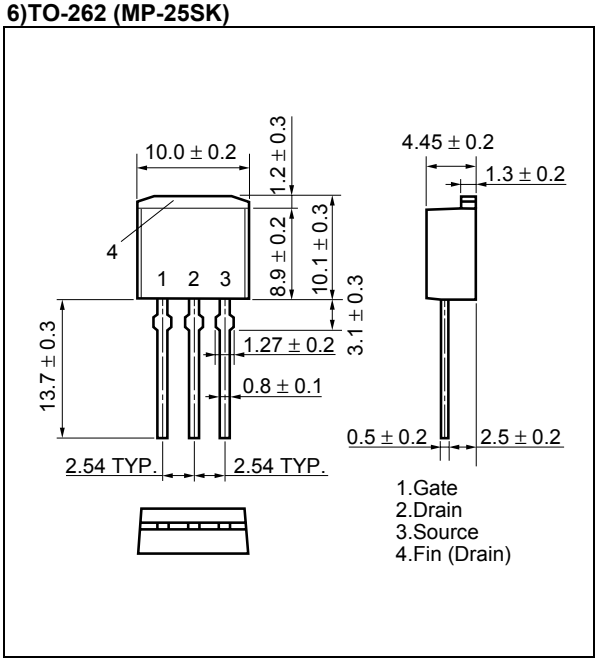

EQUIVALENT CIRCUIT

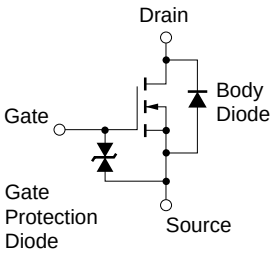

Remark The diode connected between the gate and source of the transistor serves as a protector against ESD. When this device actually used, an additional protection circuit is externally required if a voltage exceeding the rated voltage may be applied to this device.

<R> TAPE INFORMATION

There are two types (-E1, -E2) of taping depending on the direction of the device.

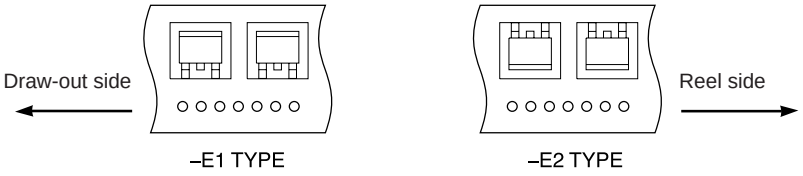

<R> MARKING INFORMATION

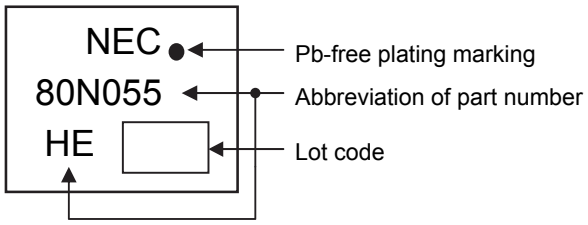

<R> RECOMMENDED SOLDERING CONDITIONS

These products should be soldered and mounted under the following recommended conditions.

For soldering methods and conditions other than those recommended below, please contact an NEC Electronics sales representative.

For technical information, see the following website.

Semiconductor Device Mount Manual (http://www.necel.com/pkg/en/mount/index.html)

Soldering Method	Soldering Conditions	Recommended Condition Symbol
Infrared reflow MP-25ZJ, MP-25ZK	Maximum temperature (Package's surface temperature): 260°C or below Time at maximum temperature: 10 seconds or less Time of temperature higher than 220°C: 60 seconds or less Preheating time at 160 to 180°C: 60 to 120 seconds Maximum number of reflow processes: 3 times Maximum chlorine content of rosin flux (percentage mass): 0.2% or less	IR60-00-3
Wave soldering MP-25, MP-25K, MP-25SK, MP-25 Fin Cut	Maximum temperature (Solder temperature): 260°C or below Time: 10 seconds or less Maximum chlorine content of rosin flux: 0.2% (wt.) or less	THDWS
Partial heating MP-25ZJ, MP-25ZK, MP-25K, MP-25SK	Maximum temperature (Pin temperature): 350°C or below Time (per side of the device): 3 seconds or less Maximum chlorine content of rosin flux: 0.2% (wt.) or less	P350
Partial heating MP-25, MP-25 Fin Cut	Maximum temperature (Pin temperature): 300°C or below Time (per side of the device): 3 seconds or less Maximum chlorine content of rosin flux: 0.2% (wt.) or less	P300

Caution Do not use different soldering methods together (except for partial heating).

- **The information in this document is current as of October, 2007. The information is subject to change without notice. For actual design-in, refer to the latest publications of NEC Electronics data sheets or data books, etc., for the most up-to-date specifications of NEC Electronics products. Not all products and/or types are available in every country. Please check with an NEC Electronics sales representative for availability and additional information.**
- No part of this document may be copied or reproduced in any form or by any means without the prior written consent of NEC Electronics. NEC Electronics assumes no responsibility for any errors that may appear in this document.
- NEC Electronics does not assume any liability for infringement of patents, copyrights or other intellectual property rights of third parties by or arising from the use of NEC Electronics products listed in this document or any other liability arising from the use of such products. No license, express, implied or otherwise, is granted under any patents, copyrights or other intellectual property rights of NEC Electronics or others.
- Descriptions of circuits, software and other related information in this document are provided for illustrative purposes in semiconductor product operation and application examples. The incorporation of these circuits, software and information in the design of a customer's equipment shall be done under the full responsibility of the customer. NEC Electronics assumes no responsibility for any losses incurred by customers or third parties arising from the use of these circuits, software and information.
- While NEC Electronics endeavors to enhance the quality, reliability and safety of NEC Electronics products, customers agree and acknowledge that the possibility of defects thereof cannot be eliminated entirely. To minimize risks of damage to property or injury (including death) to persons arising from defects in NEC Electronics products, customers must incorporate sufficient safety measures in their design, such as redundancy, fire-containment and anti-failure features.
- NEC Electronics products are classified into the following three quality grades: "Standard", "Special" and "Specific".
  The "Specific" quality grade applies only to NEC Electronics products developed based on a customer-designated "quality assurance program" for a specific application. The recommended applications of an NEC Electronics product depend on its quality grade, as indicated below. Customers must check the quality grade of each NEC Electronics product before using it in a particular application.
  "Standard": Computers, office equipment, communications equipment, test and measurement equipment, audio and visual equipment, home electronic appliances, machine tools, personal electronic equipment and industrial robots.
  "Special": Transportation equipment (automobiles, trains, ships, etc.), traffic control systems, anti-disaster systems, anti-crime systems, safety equipment and medical equipment (not specifically designed for life support).
  "Specific": Aircraft, aerospace equipment, submersible repeaters, nuclear reactor control systems, life support systems and medical equipment for life support, etc.

The quality grade of NEC Electronics products is "Standard" unless otherwise expressly specified in NEC Electronics data sheets or data books, etc. If customers wish to use NEC Electronics products in applications not intended by NEC Electronics, they must contact an NEC Electronics sales representative in advance to determine NEC Electronics' willingness to support a given application.

(Note)
(1) "NEC Electronics" as used in this statement means NEC Electronics Corporation and also includes its majority-owned subsidiaries.
(2) "NEC Electronics products" means any product developed or manufactured by or for NEC Electronics (as defined above).