Press Fit Diode, 50A

Features

- Low Leakage
- Low Forward Voltage Drop
- Low Cost
- High Surge Current Capability

Mechanical Characteristics

- **Chip**: Gpp Chip
- **Encapsulation:** Epoxy Sealed
- **Lead:** Plated Lead, Solderable
- **Mounting:** Press Fit
- **Weight**: 6.5 grams (approx.)



PRESS-FIT DIODE

Electrical Characteristics (T_A = 25^{0}C unless otherwise specified)						
Parameter		**Symbol**	**NP5002(R)**	**NP5004(R)**	**NP5006(R)**	**Units**
Maximum repetitive peak reverse voltage		V_{RRM}	200	400	600	V
Maximum RMS Voltage		V_{RMS}	140	280	420	V
Maximum DC Blocking Voltage		V_{DC}	200	400	600	V
Maximum average forward output current @ T_A = 105^{0}C		$I_{F(AV)}$	50			A
Peak forward surge current (8.3ms) single half sine-wave superimposed on rated load		I_{FSM}	600			A
Maximum instantaneous forward voltage drop @ 100 A		V_F	1.1			V
Maximum DC reverse current at rated DC blocking voltage	T_A = 25^{0}C	I_R	5.0			µA
	T_A = 100^{0}C		450			
Typical Thermal Resistance		$R_{\theta(j-c)}$	0.8			^{o}C/W
Operating and storage temperature		T_J, T_{STG}	-65 to +175			^{o}C

D-95, Sector 63, Noida – 201301, India • Tel: 0120-4205450 • Fax: 0120-4273653
sales@nainasemi.com • www.nainasemi.com

Package Outline

(All dimensions in mm)

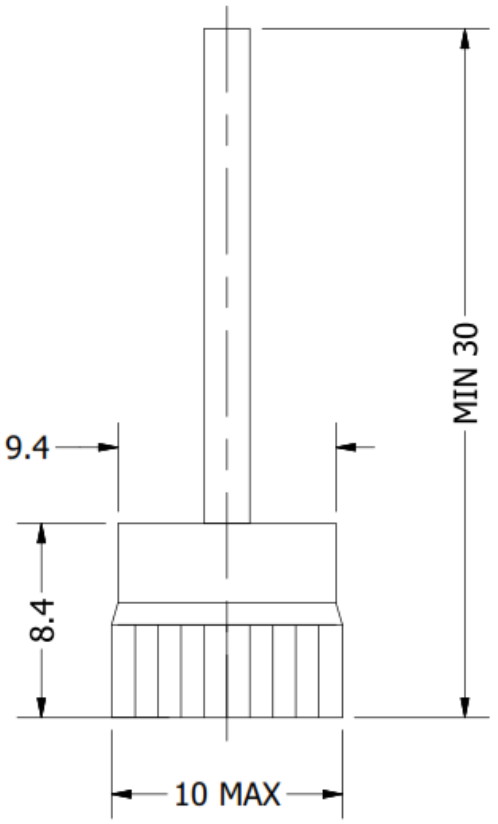

PACKAGE A

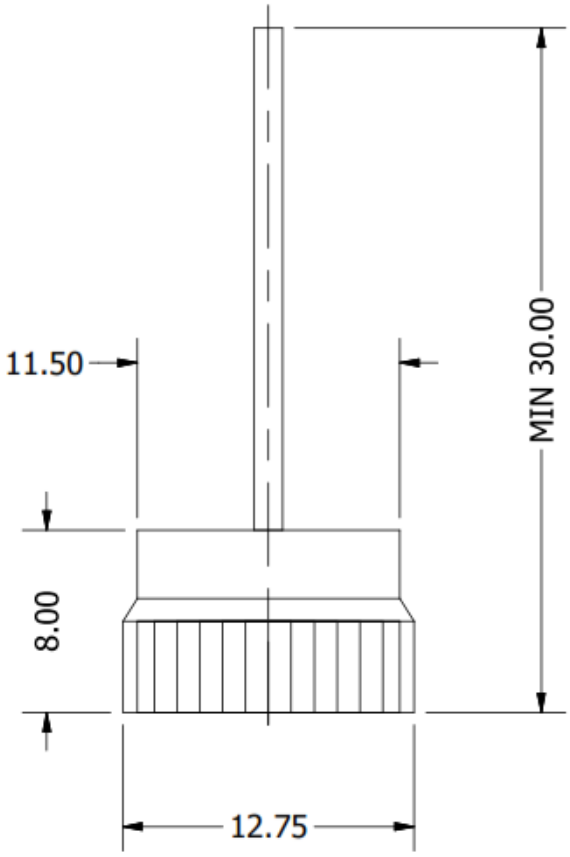

PACKAGE B

Ordering Table

NP	*50*	*02*	*R*
1	2	3	4

1 – Press-fit Diode
2 – Current Rating = $I_{F\,(AV)}$
3 – Voltage, V_{RRM} (as per table)
4 – Polarity:
- None = Normal (Cathode to Base) (**Red** Color Epoxy)
- R = Reverse (Anode to Base) (**Black** Color Epoxy)

D-95, Sector 63, Noida – 201301, India • Tel: 0120-4205450 • Fax: 0120-4273653
sales@nainasemi.com • www.nainasemi.com