NLAS5223, NLAS5223L

Ultra-Low 0.5 Ω Dual SPDT Analog Switch

The NLAS5223 is an advanced CMOS analog switch fabricated in Sub−micron silicon gate CMOS technology. The device is a dual Independent Single Pole Double Throw (SPDT) switch featuring Ultra−Low R_{ON} of 0.5 Ω, at V_{CC} = 3.0 ± 0.3 V.

The part also features guaranteed Break Before Make (BBM) switching, assuring the switches never short the driver.

Features

- Ultra−Low R_{ON}, < 0.5 Ω at V_{CC} = 3.0 ± 0.3 V
- NLAS5223 Interfaces with 2.8 V Chipset
- NLAS5223L Interfaces with 1.8 V Chipset
- Single Supply Operation from 1.65−3.6 V
- Smallest 1.4 x 1.8 x 0.75 mm Thin QFN Package
- Full 0−V_{CC} Signal Handling Capability
- High Off−Channel Isolation
- Low Standby Current, < 50 nA
- Low Distortion
- R_{ON} Flatness of 0.15 Ω
- High Continuous Current Capability
  ± 300 mA Through Each Switch
- Large Current Clamping Diodes at Analog Inputs
  ± 300 mA Continuous Current Capability
- ESD Human Body Model > 2000 V
- These are Pb−Free Devices

Applications

- Cell Phone Audio Block
- Speaker and Earphone Switching
- Ring−Tone Chip / Amplifier Switching
- Modems

ON Semiconductor®

http://onsemi.com

MARKING DIAGRAM

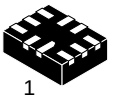

WQFN−10
CASE 488AQ

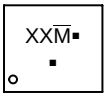

XX = Specific Device Code
AU = NLAS5223
AV = NLAS5223L
M = Date Code
▪ = Pb−Free Device
(Note: Microdot may be in either location)

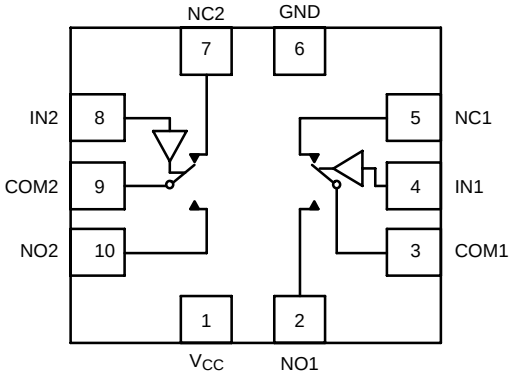

FUNCTION TABLE

IN 1, 2	NO 1, 2	NC 1, 2
0	OFF	ON
1	ON	OFF

ORDERING INFORMATION

See detailed ordering and shipping information in the package dimensions section on page 10 of this data sheet.

© Semiconductor Components Industries, LLC, 2006

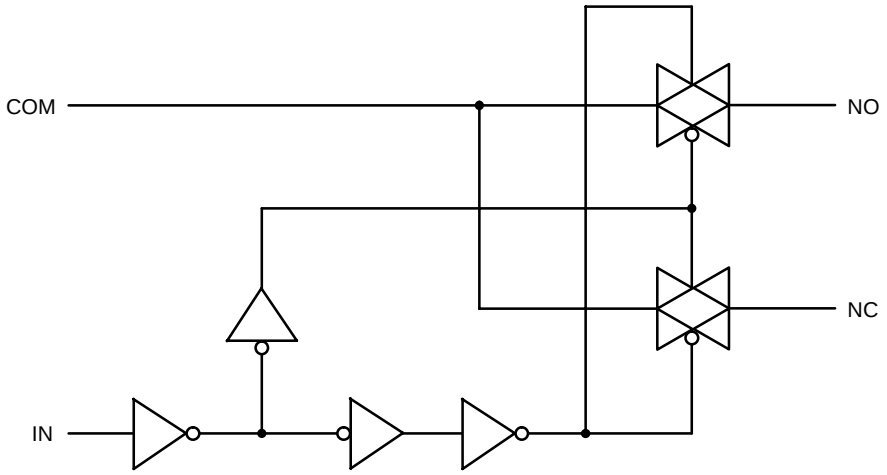

Figure 1. Logic Equivalent Circuit

PIN DESCRIPTION

QFN PIN #	Symbol	Name and Function
2, 5, 7, 10	NC1 to NC2, NO1 to NO2	Independent Channels
4, 8	IN1 and IN2	Controls
3, 9	COM1 and COM2	Common Channels
6	GND	Ground (V)
1	V_{CC}	Positive Supply Voltage

MAXIMUM RATINGS

Symbol	Parameter	Value	Unit
V_{CC}	Positive DC Supply Voltage	−0.5 to +4.6	V
V_{IS}	Analog Input Voltage (V_{NO}, V_{NC}, or V_{COM})	$-0.5 \le V_{IS} \le V_{CC} + 0.5$	V
V_{IN}	Digital Select Input Voltage	$-0.5 \le V_{IN} \le +4.6$	V
I_{anl1}	Continuous DC Current from COM to NC/NO	±300	mA
$I_{anl-pk1}$	Peak Current from COM to NC/NO, 10 Duty Cycle (Note 1)	±500	mA
I_{clmp}	Continuous DC Current into COM/NO/NC with Respect to V_{CC} or GND	±100	mA

Stresses exceeding Maximum Ratings may damage the device. Maximum Ratings are stress ratings only. Functional operation above the Recommended Operating Conditions is not implied. Extended exposure to stresses above the Recommended Operating Conditions may affect device reliability.

1. Defined as 10% ON, 90% OFF Duty Cycle.

RECOMMENDED OPERATING CONDITIONS

Symbol	Parameter		Min	Max	Unit
V_{CC}	DC Supply Voltage		1.65	3.6	V
V_{IN}	Digital Select Input Voltage (OVT) Overvoltage Tolerance		GND	3.6	V
V_{IS}	Analog Input Voltage (NC, NO, COM)		GND	V_{CC}	V
T_A	Operating Temperature Range		−40	+85	°C
t_r, t_f	Input Rise or Fall Time, SELECT	V_{CC} = 1.6 V − 2.7 V V_{CC} = 3.0 V − 3.6 V		20 10	ns/V

NLAS5223 DC CHARACTERISTICS − DIGITAL SECTION (Voltages Referenced to GND)

Symbol	Parameter	Condition	V_{CC}	Guaranteed Limit		Unit
				25°C	−40°C to +85°C	
V_{IH}	Minimum High−Level Input Voltage, Select Inputs		3.0 3.6	1.4 1.7	1.4 1.7	V
V_{IL}	Maximum Low−Level Input Voltage, Select Inputs		3.0 3.6	0.7 0.8	0.7 0.8	V
I_{IN}	Maximum Input Leakage Current, Select Inputs	V_{IN} = 3.6 V or GND	3.6	±0.1	±1.0	μA
I_{OFF}	Power Off Leakage Current	V_{IN} = 3.6 V or GND	0	±0.5	±2.0	μA
I_{CC}	Maximum Quiescent Supply Current (Note 2)	Select and V_{IS} = V_{CC} or GND	1.65 to 3.6	±1.0	±2.0	μA

2. Guaranteed by design. Resistance measurements do not include test circuit or package resistance.

NLAS5223 DC ELECTRICAL CHARACTERISTICS − ANALOG SECTION

Symbol	Parameter	Condition	V_{CC}	Guaranteed Maximum Limit				Unit
				25°C		−40°C to +85°C		
				Min	Max	Min	Max	
R_{ON}	NC/NO On−Resistance (Note 3)	V_{IN} = V_{IL} or V_{IN} = V_{IH} V_{IS} = GND to V_{CC} I_{COM} = 100 mA	3.0 3.6		0.3 0.3		0.4 0.4	Ω
R_{FLAT}	NC/NO On−Resistance Flatness (Notes 3 and 4)	I_{COM} = 100 mA V_{IS} = 0 to V_{CC}	3.0 3.6		0.15 0.15		0.15 0.15	Ω
ΔR_{ON}	On−Resistance Match Between Channels (Notes 3 and 5)	V_{IS} = 1.5 V; I_{COM} = 100 mA V_{IS} = 1.8 V; I_{COM} = 100 mA	3.0 3.6		0.05 0.05		0.05 0.05	Ω
$I_{NC(OFF)}$ $I_{NO(OFF)}$	NC or NO Off Leakage Current (Note 3)	V_{IN} = V_{IL} or V_{IH} V_{NO} or V_{NC} = 0.3 V V_{COM} = 3.3 V	3.6	−10	10	−100	100	nA
$I_{COM(ON)}$	COM ON Leakage Current (Note 3)	V_{IN} = V_{IL} or V_{IH} V_{NO} 0.3 V or 3.3 V with V_{NC} floating or V_{NC} 0.3 V or 3.3 V with V_{NO} floating V_{COM} = 0.3 V or 3.3 V	3.6	−10	10	−100	100	nA

3. Guaranteed by design. Resistance measurements do not include test circuit or package resistance.
4. Flatness is defined as the difference between the maximum and minimum value of On−resistance as measured over the specified analog signal ranges.
5. $\Delta R_{ON} = R_{ON(MAX)} - R_{ON(MIN)}$ between NC1 and NC2 or between NO1 and NO2.

NLAS5223L DC CHARACTERISTICS − DIGITAL SECTION (Voltages Referenced to GND)

Symbol	Parameter	Condition	V_{CC}	Guaranteed Limit		Unit
				25°C	−40°C to +85°C	
V_{IH}	Minimum High−Level Input Voltage, Select Inputs		3.0 3.6	1.1 1.3	1.1 1.3	V
V_{IL}	Maximum Low−Level Input Voltage, Select Inputs		3.0 3.6	0.5 0.5	0.5 0.5	V
I_{IN}	Maximum Input Leakage Current, Select Inputs	V_{IN} = 3.6 V or GND	3.6	±0.1	±1.0	μA
I_{OFF}	Power Off Leakage Current	V_{IN} = 3.6 V or GND	0	±0.5	±2.0	μA
I_{CC}	Maximum Quiescent Supply Current (Note 6)	Select and V_{IS} = V_{CC} or GND	1.65 to 3.6	±1.0	±2.0	μA

6. Guaranteed by design. Resistance measurements do not include test circuit or package resistance.

NLAS5223L DC ELECTRICAL CHARACTERISTICS − ANALOG SECTION

Symbol	Parameter	Condition	V_{CC}	Guaranteed Maximum Limit				Unit
				25°C		−40°C to +85°C		
				Min	Max	Min	Max	
R_{ON}	NC/NO On−Resistance (Note 7)	V_{IN} = V_{IL} or V_{IN} = V_{IH} V_{IS} = GND to V_{CC} I_{COM} = 100 mA	3.0 3.6		0.3 0.3		0.4 0.4	Ω
R_{FLAT}	NC/NO On−Resistance Flatness (Notes 7 and 8)	I_{COM} = 100 mA V_{IS} = 0 to V_{CC}	3.0 3.6		0.15 0.15		0.15 0.15	Ω
ΔR_{ON}	On−Resistance Match Between Channels (Notes 7 and 9)	V_{IS} = 1.5 V; I_{COM} = 100 mA V_{IS} = 1.8 V; I_{COM} = 100 mA	3.0 3.6		0.05 0.05		0.05 0.05	Ω
$I_{NC(OFF)}$ $I_{NO(OFF)}$	NC or NO Off Leakage Current (Note 7)	V_{IN} = V_{IL} or V_{IH} V_{NO} or V_{NC} = 0.3 V V_{COM} = 3.3 V	3.6	−10	10	−100	100	nA
$I_{COM(ON)}$	COM ON Leakage Current (Note 7)	V_{IN} = V_{IL} or V_{IH} V_{NO} 0.3 V or 3.3 V with V_{NC} floating or V_{NC} 0.3 V or 3.3 V with V_{NO} floating V_{COM} = 0.3 V or 3.3 V	3.6	−10	10	−100	100	nA

7. Guaranteed by design. Resistance measurements do not include test circuit or package resistance.
8. Flatness is defined as the difference between the maximum and minimum value of On−resistance as measured over the specified analog signal ranges.
9. $\Delta R_{ON} = R_{ON(MAX)} - R_{ON(MIN)}$ between NC1 and NC2 or between NO1 and NO2.

AC ELECTRICAL CHARACTERISTICS (Input $t_r = t_f = 3.0$ ns)

Symbol	Parameter	Test Conditions	V_{CC} (V)	V_{IS} (V)	Guaranteed Maximum Limit					Unit
					25°C			−40°C to +85°C		
					Min	Typ*	Max	Min	Max	
t_{ON}	Turn−On Time	R_L = 50 Ω, C_L = 35 pF (Figures 3 and 4)	2.3 − 3.6	1.5			50		60	ns
t_{OFF}	Turn−Off Time	R_L = 50 Ω, C_L = 35 pF (Figures 3 and 4)	2.3 − 3.6	1.5			30		40	ns
t_{BBM}	Minimum Break−Before−Make Time	V_{IS} = 3.0 R_L = 50 Ω, C_L = 35 pF (Figure 2)	3.0	1.5	2	15				ns

		Typical @ 25, V_{CC} = 3.6 V	
C_{IN}	Control Pin Input Capacitance	3.5	pF
$C_{NO/NC}$	NO, NC Port Capacitance	75	pF
C_{COM}	COM Port Capacitance When Switch is Enabled	240	pF

*Typical Characteristics are at 25°C.

ADDITIONAL APPLICATION CHARACTERISTICS (Voltages Referenced to GND Unless Noted)

Symbol	Parameter	Condition	V_{CC} (V)	25°C	Unit
				Typical	
BW	Maximum On−Channel −3 dB Bandwidth or Minimum Frequency Response	V_{IN} centered between V_{CC} and GND (Figure 5)	1.65 − 3.6	17	MHz
V_{ONL}	Maximum Feed−through On Loss	V_{IN} = 0 dBm @ 100 kHz to 50 MHz V_{IN} centered between V_{CC} and GND (Figure 5)	1.65 − 3.6	−0.06	dB
V_{ISO}	Off−Channel Isolation	f = 100 kHz; V_{IS} = 1 V RMS; C_L = 5.0 pF V_{IN} centered between V_{CC} and GND (Figure 5)	1.65 − 3.6	−65	dB
Q	Charge Injection Select Input to Common I/O	V_{IN} = $V_{CC\ to}$ GND, R_{IS} = 0 W, C_L = 1.0 nF Q = C_L x DV_{OUT} (Figure 6)	1.65 − 3.6	38	pC
THD	Total Harmonic Distortion THD + Noise	F_{IS} = 20 Hz to 20 kHz, R_L = R_{gen} = 600 Ω, C_L = 50 pF V_{IS} = 2.0 V RMS	3.0	0.12	%
VCT	Channel−to−Channel Crosstalk	f = 100 kHz; V_{IS} = 1.0 V RMS, C_L = 5.0 pF, R_L = 50 Ω V_{IN} centered between V_{CC} and GND (Figure 5)	1.65 − 3.6	−70	dB

10. Off−Channel Isolation = 20log10 (V_{COM}/V_{NO}), V_{COM} = output, V_{NO} = input to off switch.

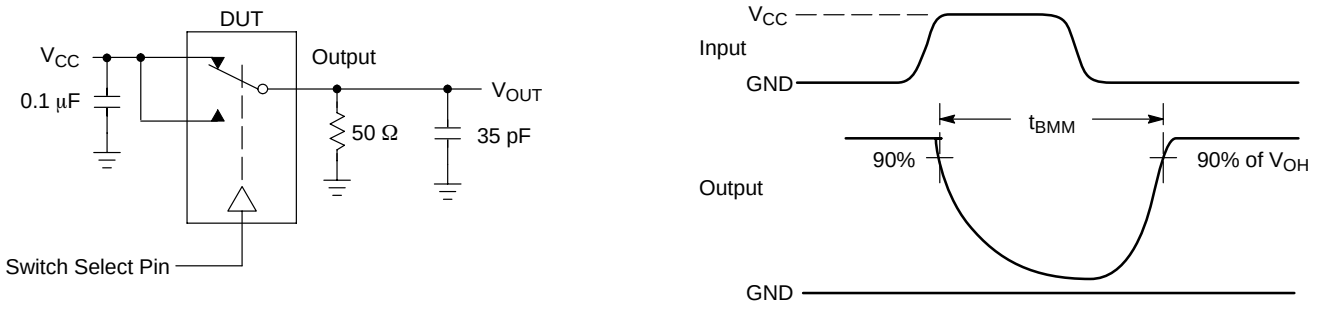

Figure 2. t_{BBM} (Time Break−Before−Make)

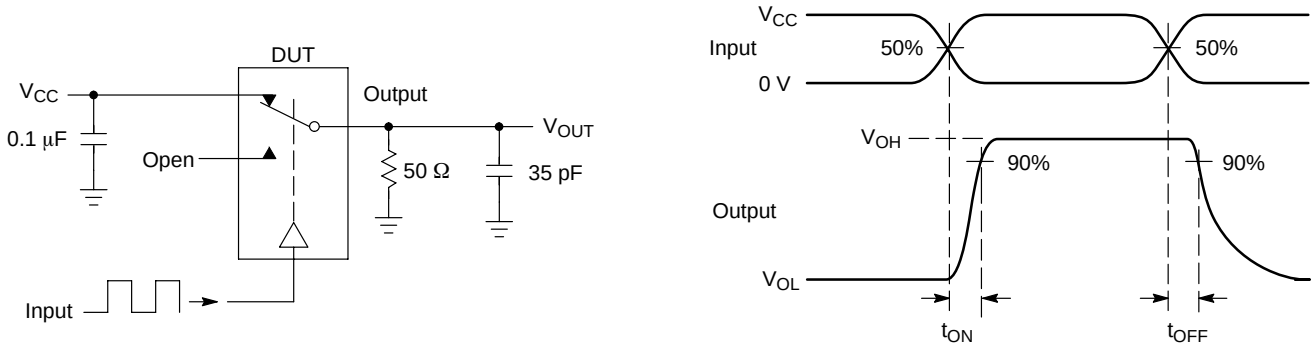

Figure 3. t_{ON}/t_{OFF}

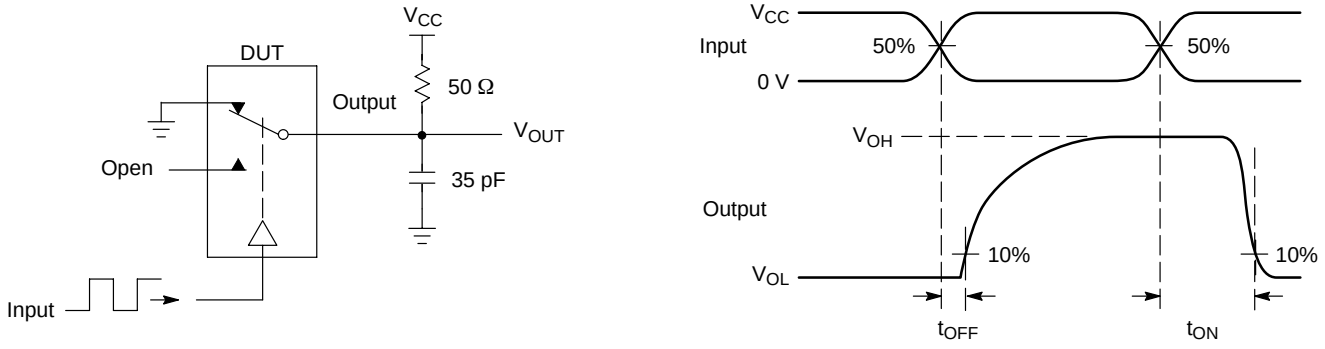

Figure 4. t_{ON}/t_{OFF}

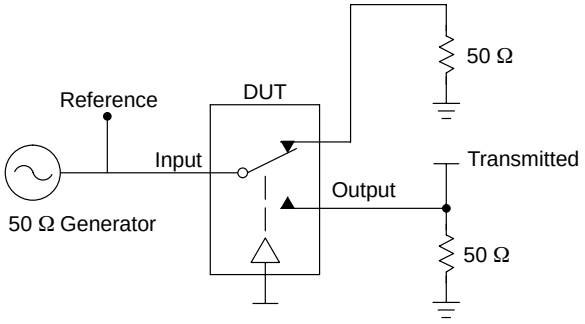

Channel switch control/s test socket is normalized. Off isolation is measured across an off channel. On loss is the bandwidth of an On switch. V_{ISO}, Bandwidth and V_{ONL} are independent of the input signal direction.

V_{ISO} = Off Channel Isolation = 20 Log $\left(\frac{V_{OUT}}{V_{IN}}\right)$ for V_{IN} at 100 kHz

V_{ONL} = On Channel Loss = 20 Log $\left(\frac{V_{OUT}}{V_{IN}}\right)$ for V_{IN} at 100 kHz to 50 MHz

Bandwidth (BW) = the frequency 3 dB below V_{ONL}
V_{CT} = Use V_{ISO} setup and test to all other switch analog input/outputs terminated with 50 Ω

Figure 5. Off Channel Isolation/On Channel Loss (BW)/Crosstalk (On Channel to Off Channel)/V_{ONL}

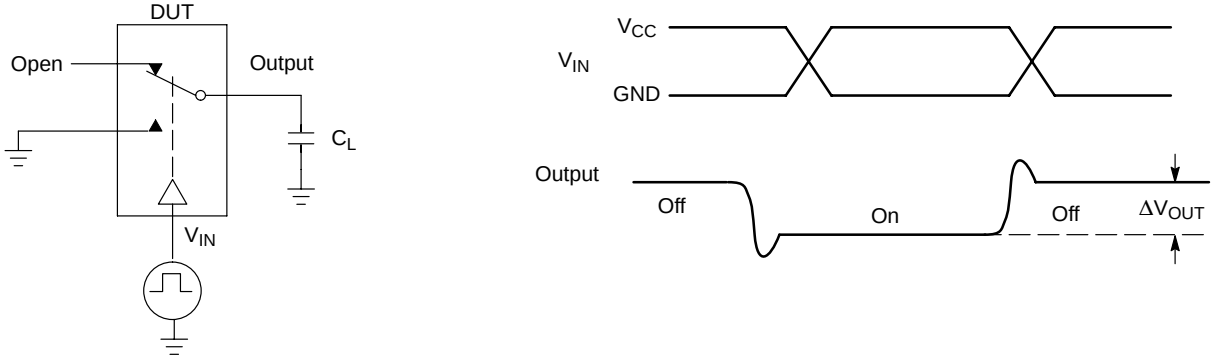

Figure 6. Charge Injection: (Q)

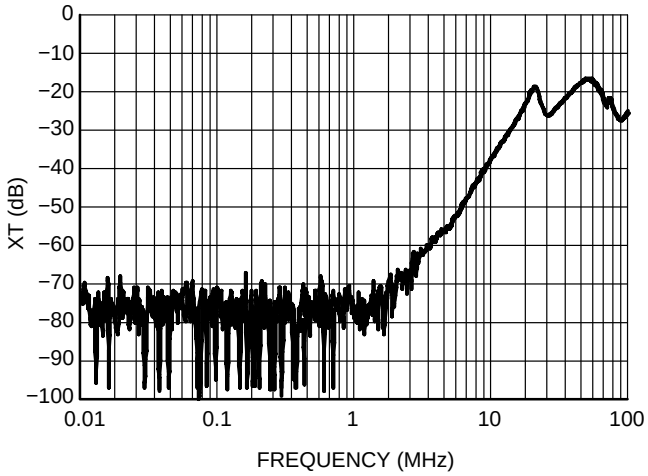

Figure 7. Cross Talk vs. Frequency @ V_{CC} = 3.6 V

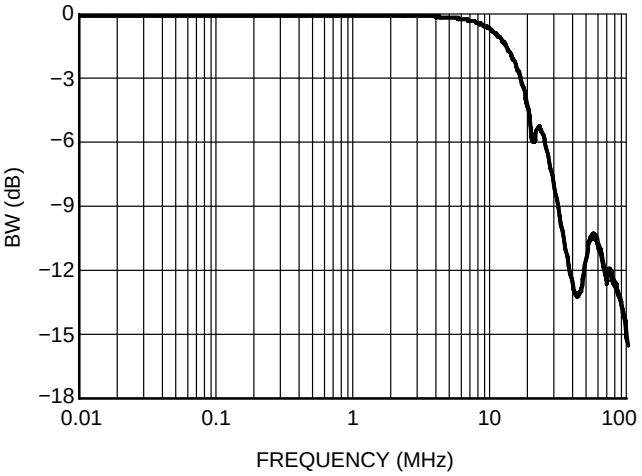

Figure 8. Bandwidth vs. Frequency

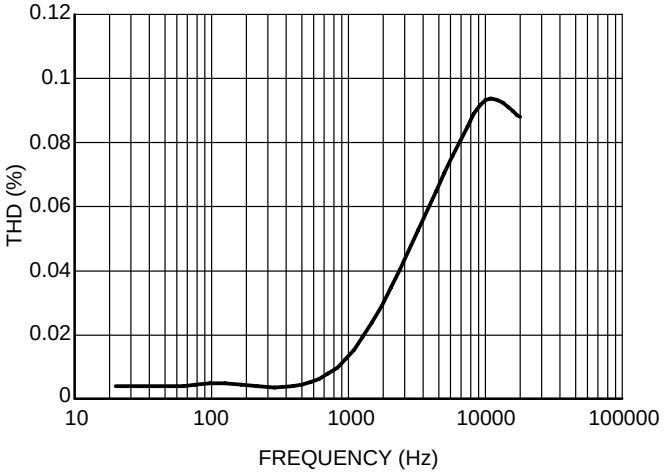

Figure 9. Total Harmonic Distortion

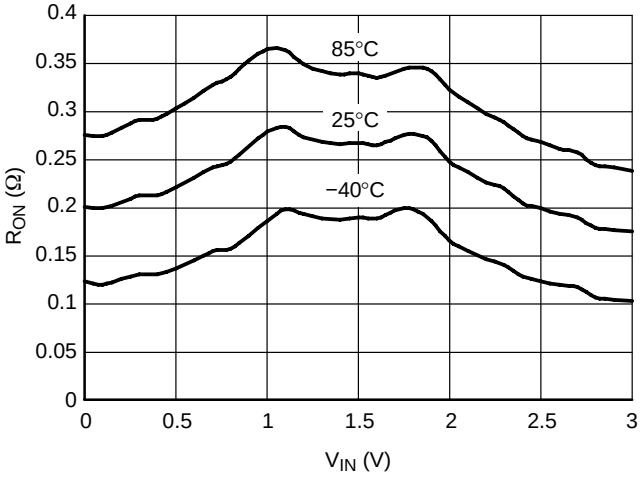

Figure 10. On−Resistance vs. Input Voltage @ V_{CC} = 3.0 V

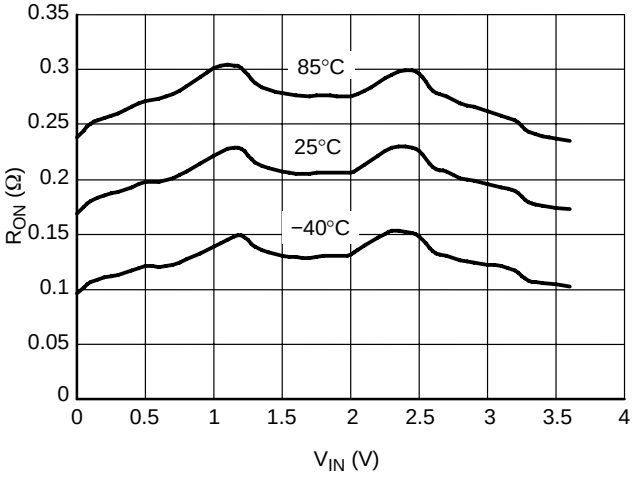

Figure 11. On−Resistance vs. Input Voltage @ V_{CC} = 3.6 V

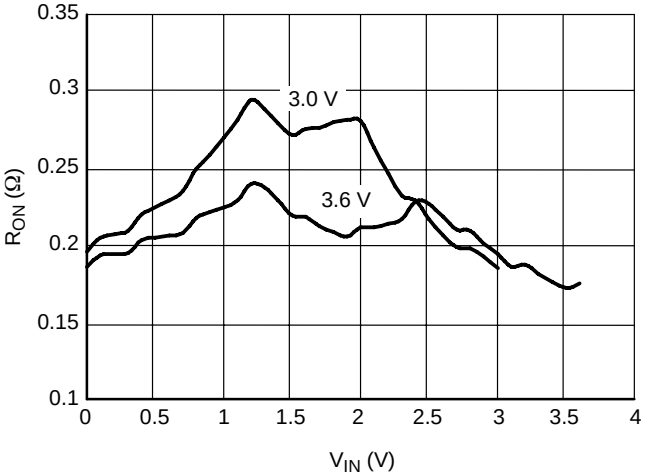

Figure 12. On−Resistance vs. Input Voltage

ORDERING INFORMATION

Device	Package	Shipping†
NLAS5223MNR2G	WQFN−10 (Pb−Free)	3000 / Tape & Reel
NLAS5223LMNR2G	WQFN−10 (Pb−Free)	3000 / Tape & Reel

†For information on tape and reel specifications, including part orientation and tape sizes, please refer to our Tape and Reel Packaging Specifications Brochure, BRD8011/D.

PACKAGE DIMENSIONS

WQFN10, 1.4x1.8x0.4P
CASE 488AQ−01
ISSUE B

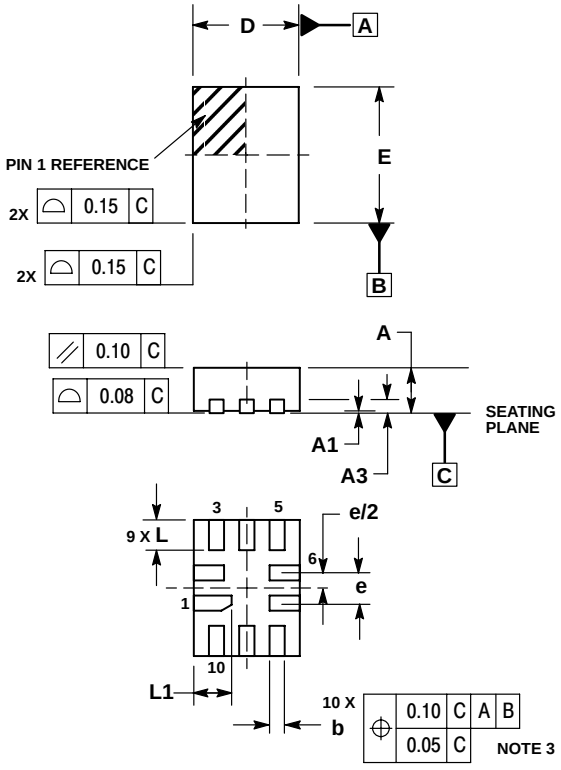

NOTES:
1. DIMENSIONING AND TOLERANCING PER ASME Y14.5M, 1994.
2. CONTROLLING DIMENSION: MILLIMETERS
3. DIMENSION b APPLIES TO PLATED TERMINAL AND IS MEASURED BETWEEN 0.25 AND 0.30 MM FROM TERMINAL.
4. COPLANARITY APPLIES TO THE EXPOSED PAD AS WELL AS THE TERMINALS.
5. EXPOSED PADS CONNECTED TO DIE FLAG. USED AS TEST CONTACTS.

	MILLIMETERS	
DIM	MIN	MAX
A	0.70	0.80
A1	0.00	0.050
A3	0.20 REF	
b	0.15	0.25
D	1.40 BSC	
E	1.80 BSC	
e	0.40 BSC	
L	0.30	0.50
L1	0.40	0.60

SOLDERING FOOTPRINT*

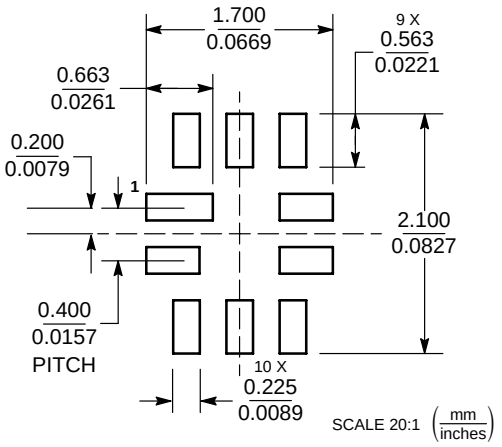

*For additional information on our Pb−Free strategy and soldering details, please download the ON Semiconductor Soldering and Mounting Techniques Reference Manual, SOLDERRM/D.

ON Semiconductor and ON are registered trademarks of Semiconductor Components Industries, LLC (SCILLC). SCILLC reserves the right to make changes without further notice to any products herein. SCILLC makes no warranty, representation or guarantee regarding the suitability of its products for any particular purpose, nor does SCILLC assume any liability arising out of the application or use of any product or circuit, and specifically disclaims any and all liability, including without limitation special, consequential or incidental damages. “Typical” parameters which may be provided in SCILLC data sheets and/or specifications can and do vary in different applications and actual performance may vary over time. All operating parameters, including “Typicals” must be validated for each customer application by customer’s technical experts. SCILLC does not convey any license under its patent rights nor the rights of others. SCILLC products are not designed, intended, or authorized for use as components in systems intended for surgical implant into the body, or other applications intended to support or sustain life, or for any other application in which the failure of the SCILLC product could create a situation where personal injury or death may occur. Should Buyer purchase or use SCILLC products for any such unintended or unauthorized application, Buyer shall indemnify and hold SCILLC and its officers, employees, subsidiaries, affiliates, and distributors harmless against all claims, costs, damages, and expenses, and reasonable attorney fees arising out of, directly or indirectly, any claim of personal injury or death associated with such unintended or unauthorized use, even if such claim alleges that SCILLC was negligent regarding the design or manufacture of the part. SCILLC is an Equal Opportunity/Affirmative Action Employer. This literature is subject to all applicable copyright laws and is not for resale in any manner.

PUBLICATION ORDERING INFORMATION

LITERATURE FULFILLMENT:
Literature Distribution Center for ON Semiconductor
P.O. Box 5163, Denver, Colorado 80217 USA
Phone: 303−675−2175 or 800−344−3860 Toll Free USA/Canada
Fax: 303−675−2176 or 800−344−3867 Toll Free USA/Canada
Email: orderlit@onsemi.com

N. American Technical Support: 800−282−9855 Toll Free USA/Canada
Europe, Middle East and Africa Technical Support:
Phone: 421 33 790 2910
Japan Customer Focus Center
Phone: 81−3−5773−3850

ON Semiconductor Website: **www.onsemi.com**

Order Literature: http://www.onsemi.com/orderlit

For additional information, please contact your local Sales Representative

NLAS5223/D