2016-V1.0-1026

Specifications

AC-DC Switching Mode Power Supply

NK-35 Series, 35W

PAIRUI ELECTRONICS
No. 545 Museum Road
Yangzhou, Jiangsu
China 225009
Tel: 86 (514) 8279 1592
Fax: 86 (514) 8769 3159

2016

AC-DC Switching Mode Power Supply

NK-35 SERIES, SINGLE OUTPUT, 35W

Features

- 3 Year Warranty
- Universal Input 90~264Vac
- 100% Full Load Burn-in Test
- Cooling by Free Air Convection
- Ultra-Slim Size
- Built-in EMI Filter
- LED Indicator for Power On
- All Round Protections: Short Circuit, Over Voltage, Over Load



CE

Applications

- ✓ Process Control
- ✓ Factory Automation
- ✓ Home Appliance
- ✓ Other Industrial Applications

Electrical

NK 35 - 24 H

Housing Color
Blank = Silver color(default)
H = Black color

Output Voltage(VDC)

Output Power(W)

Series Name

Electrical

Part Number	Nominal Input Voltage	Output Voltage	Output Current	Ripple (Typ.)	Efficiency (Typ.)	Certificate
NK35-5	100-240VAC	5V	7A	80mV	82%	CE
NK35-12	100-240VAC	12V	3A	120mV	83%	CE
NK35-15	100-240VAC	15V	2.4A	120mV	84%	CE
NK35-24	100-240VAC	24V	1.5A	120mV	86%	CE
NK35-36	100-240VAC	36V	1A	200mV	87%	CE
NK35-48	100-240VAC	48V	0.8A	200mV	88%	CE

NOTE:
1. The ripple values are measured at 20MHz of bandwidth by using a 12'' twisted pair-wire terminated with 0.1uF & 47uF parallel capacitor under ambient temperature 25℃ at rated input voltage and rated load;
2. The efficiency values are measured under ambient temperature 25℃ at rated input voltage and rated load.

INPUT

PARAMETER	CONDITIONS	MIN	TYP	MAX	UNITS
Input voltage		90 125		264 370	Vac Vdc
Input frequency		47		63	Hz
Inrush current	Cold start, Vin=230Vac		45		A
Leakage current	Vin=240Vac			1	mA

OUTPUT

PARAMETER	CONDITIONS	MIN	TYP	MAX	UNITS
Output voltage adjustable range			±10		%
Minimum load		0			A
Line regulation	Vin from 100Vac to 240Vac			±0.5	%
Load regulation	Vout=5Vdc Vout=12/24/36/48Vdc		2 1		% %
Rise time	Full load, Vin=115Vac Full load, Vin=230Vac		30 30		ms ms
Hold up time	Full load, Vin=115Vac Full load, Vin=230Vac		30 11		ms ms

Protection

Short circuit	Hiccup mode, it will recover automatically after fault condition is removed
Overload	105-150%, hiccup mode, it will recover automatically after fault condition is removed
Over voltage	115-150%, shut-off output voltage, the power supply will recover after the power is turned-on again

Environment

PARAMETER	CONDITIONS	MIN	TYP	MAX	UNITS
Ambient operating temperature	Startup at rated voltage (Derating required)	-30		+70	℃
Operating relative humidity	Non condensing	20		95	%
Storage temperature	Humidity 10 ~ 95% RH	-40		+85	℃
MTBF	Full load, 220Vac input, 25℃ ambient temperature	200			Khrs
Cooling	Free air convection				
Dimension(W x H x D)	99.0 x 82.0 x 30.0mm (3.90 x 3.23 x 1.18inch)				
Weight	230g				
Packing	60pcs/15kg/0.7cuft/carton Carton size 620 x 260 x 175mm(LxWxH)				

Safety/EMC

Isolation voltage	I/P-O/P: 3KVac, I/P-FG: 1.5KVac, O/P-FG: 0.5KVac
Safety	Design in accordance to UL60950, EN60950, UL8750, EN61347, EN62493
EMC	EN 55015:2013+A1:2015 EN 61000-3-2 EN 61000-3-3 EN 61547:2009

NOTE: Unless otherwise specified, all the above parameters are measured at ambient temperature of 25℃ and Vin=100Vac to 240Vac.

Mechanical

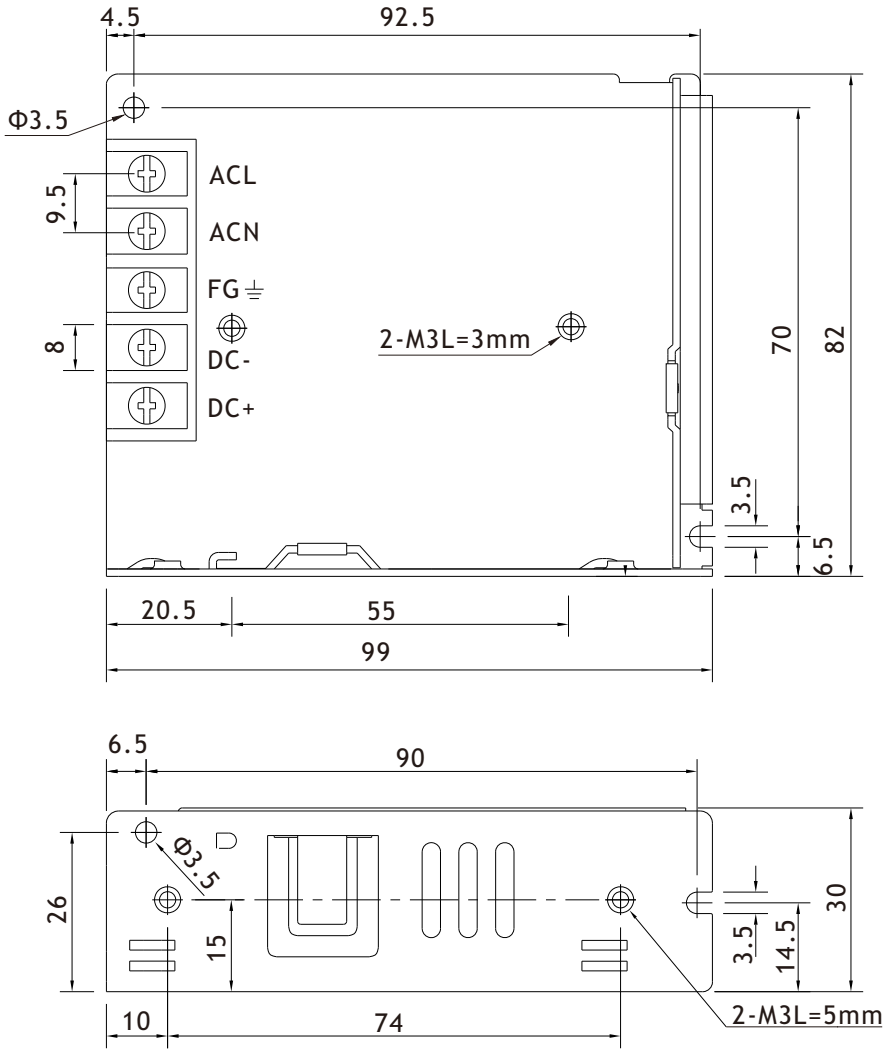

Unit: mm
Tolerance: ±1.0

Electrical Curve

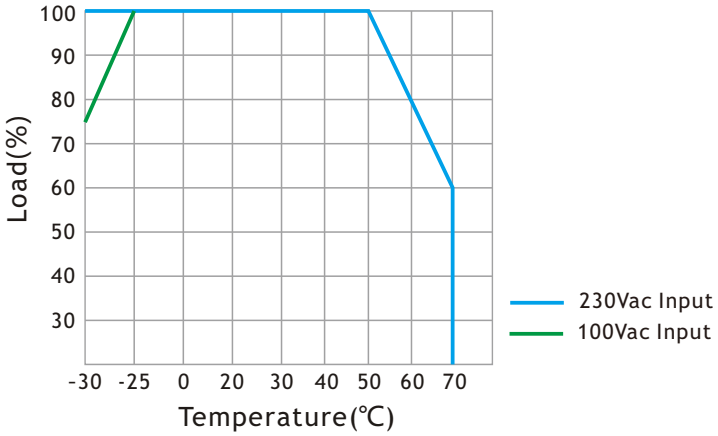

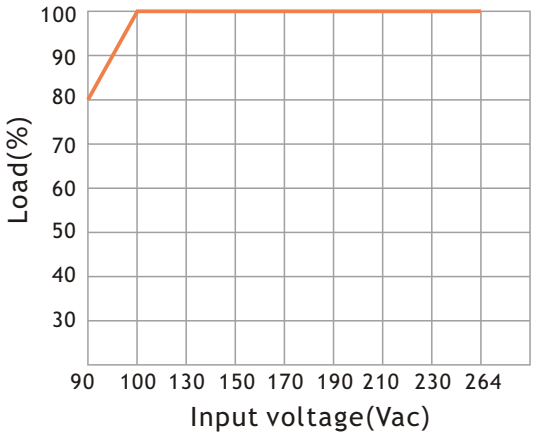

Block Diagram

