NOTES:

1. DELETED

2. DIMENSIONS SHOWN IN BRACKETS [ ] ARE IN MILLIMETERS AND SHOWN FOR REF. ONLY

3. CATALOG NO. CODE: NJ ◪ ** D ◺ ◐ △

◪ = END CONFIGURATION:
BLANK = NO OPEN END
"S" = ONE OPEN END

** = NUMBER OF CONTACT PAIRS (POSITIONS)

D = GRID SPACING:
.125 x .250 [3.18 x 6.35]

◺ = CARD SLOT DEPTH (𝔾 DIM.):

1 = .415 [10.54] STANDARD
2 = .350 [8.89] } OPTIONAL ON SHADED ENDS ONLY
3 = .300 [7.62]

◐ = TAIL LENGTH (𝔽 DIM.):

			J DIM REF	
1 =	.189	[4.80]	1 = .025	[0.64]
2 =	.480	[12.19]	2 = .316	[8.03]
3 =	.575	[14.60]	3 = .411	[10.44]
4 =	.707	[17.95]	4 = .543	[13.79]
5 =	.805	[20.44]	5 = .641	[16.28]

△ = PLATING: SEE SELECTIVE PLATING CHART

4. MARK "WIN. EL.", PART NO. & DATE CODE USING .12 [3.1] HIGH GOTHIC CHARACTERS IN INK OF CONTRASTING COLOR LOCATED APPROX. AS SHOWN

5.

6. TO DETERMINE DIMENSIONS NOT SHOWN IN CHART EACH ADDITIONAL PAIR POSITION ADDED TO POSITION SHOWN, INCREASED DIMENSION BY .125 [3.18].
EXAMPLE:
SIZE 20 DIM. 𝔼 —
2.000 + (5 x .125) = 2.625
[50.80] + (5 x [3.18]) = [66.68]

7. THESE DIMENSIONS APPLY AFTER PRESSED INTO P.C. BOARD

8. FOR CUT & BUTT ASSEMBLY, SEE DWG. # 27363 FOR ASSEMBLY INSTRUCTIONS INTO P.C. BOARD.

9. THIS DIMENSION TAKEN FROM THE TOP OF P.C. BOARD.

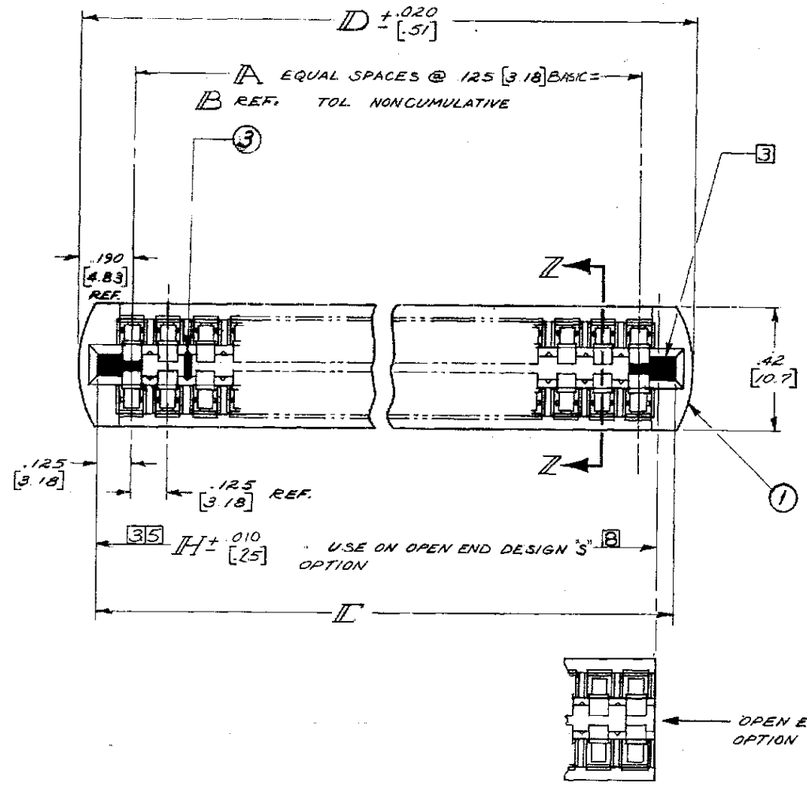

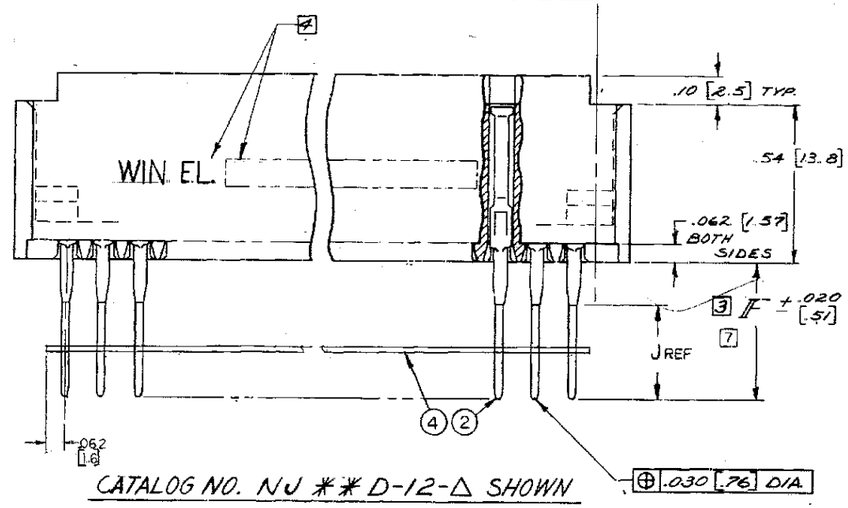

CATALOG NO. NJ ** D-12-△ SHOWN

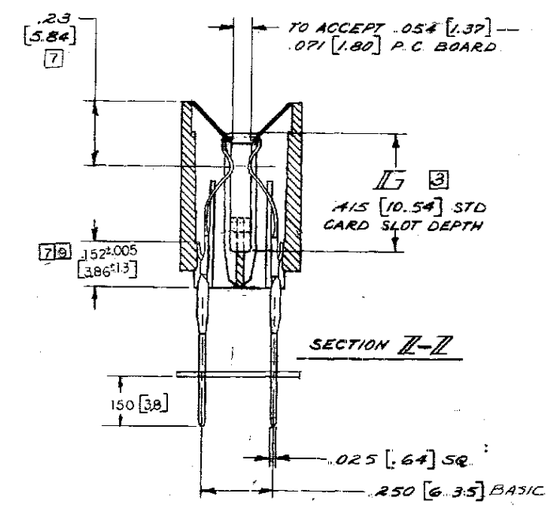

1. INSULATOR — POLYESTER THERMOPLASTIC ~ GLASS FILLED, COLOR NATURAL
2. CONTACT — COPPER NICKEL TIN ALLOY
3. POLARIZING KEY — NYLON ~ GLASS FILLED, COLOR BLACK
ORDER UNDER CAT. NO. 10[illegible]-101665
4. CONTACT TIP CONTROL STRIP

SELECTIVE PLATING CHART

△ CODE	CONTACT AREA		C-PRESS COMPLIANT SECTION & TAIL
192	.000030 0.00076 MIN GOLD OVER .000050 0.00127 MICROINCHES MIN. NICKEL UNDERPLATE		.000050 0.00127 MIN. TIN-LEAD
195	.000030 0.00076 MIN GOLD OVER .000050 0.00127 MICROINCHES MIN. NICKEL UNDERPLATE		GOLD FLASH
792	.000030 0.00076 MIN GOLD OVER .000050 0.00127 MICROINCHES MIN. NICKEL UNDERPLATE		**.000020** **.000060** MIN. PURE TIN (RoHS)

(CONSULT SALES FOR ADDITIONAL PLATING OPTIONS)

CATALOG NO.	A	B REF.	𝔼	D ± .020 [.51]	H ± .010 [.25]
NJ ◪ 61 D ◺ ◐ △	61	7.500 [190.50]	7.750 [196.85]	7.880 [200.15]	7.747 [196.77]
19	18	2.250 [57.15]	2.500 [63.50]	2.630 [66.80]	2.497 [63.42]
18	17	2.125 [53.98]	2.375 [60.32]	2.505 [63.62]	2.372 [60.25]
17	16	2.000 [50.80]	2.250 [57.15]	2.380 [60.45]	2.247 [57.07]
16	15	1.875 [47.62]	2.125 [53.96]	2.255 [57.28]	2.122 [53.90]
NJ ◪ 15 D ◺ ◐ △	14	1.750 [44.45]	2.000 [50.80]	2.130 [54.10]	1.997 [50.72]

REV	CHANGE	DATE	BY
A	RELEASED ECN#-2393-04 ENV-092796	1-21-85	JR
B	1. CHANGE TAIL LG. 2. ADDED NOTE 7 3. ADDED J DIM. ECN #00026 ECN#-101665-MD	10-22-86	LJP
C	1. ADDED NOTE 6, ADD NOTE 4TO LOGO. 2. ADDED NOTE 8 & 9 3. ADDED DIM. ECN#-00128 ENV-079872	8-1-88	LBF
D	1. ADDED NOTE 9 2. REVISED NOTE 7 3. ADDED NOTE 9 4. ADDED DIM. 𝔾 TO SECTION Z-Z ECN#-01913 ENV-20020	11-23-88	
E	REVISED "H" DIM. AND NUMBERS ECN#2397		
F	CHANGED COLOR CHART		
G	ADDED SELECTIVE PLATING CHART PER ECR 8546		
H	REVISED CHART PER ECR 8642		
J	REVISED PLATING CODE 792 ECR-ER-1364	09/12/06	CWB

GENERAL NOTES (UNLESS OTHERWISE SPECIFIED)
1. ALL DIMENSIONS ARE IN INCHES.
2. ALL DIMENSIONS ARE
3. REMOVE ALL BURRS TO ___ MAX.
4. BREAK ALL SHARP EDGES EQ. TO ___ R. MAX.
5. ___ R. MAX. ON INSIDE CORNERS.
6. ALL DIAMETERS CONCENTRIC ___ T.I.R. MAX.
7. GENERAL SURFACE FINISH TO BE ___ MAX.
8. TOLERANCES: .XX ±.02, .XXX ±.005, ANGLES ±1°

CLASSIFICATION OF CHARACTERISTICS PER MIL-STD 105: MAJOR ___ MINOR ___

CUSTOMER DRAWING

TITLE: EDGECARD, CONTINUOUS CARD COLLECTOR

SCALE 4/1 | DR. Joe R. 1-15-85 | CK. A.R. 1-3-85 | APP. 1-15-85

WINCHESTER ELECTRONICS
DIVISION OF LITTON BUSINESS INCORPORATED
OAKVILLE, CONNECTICUT

DWG. SIZE D | 24514 | J

June 2006 - This drawing became the property of Winchester Electronics Corporation, Wallingford, CT.