DUAL TIMER

■ GENERAL DESCRIPTION

The NJM556 dual monolithic timing circuit is a highly stable controller capable of producing accurate time delays or oscillation. In the time delay mode, delay time is precisely controlled by only two external parts: a resistor and a capacitor. For operation as an oscillator, both the free running frequency and the duty cycle are accurately controlled by two external resistors and a capacitor.

Terminals are provided for triggering and resetting. The circuit will trigger and reset on falling waveforms. The output can source or sink up to 200mA or drive TTL circuits.

■ PACKAGE OUTLINE

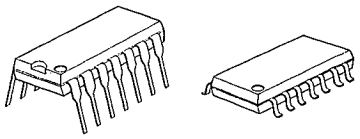

NJM556D NJM556M

■ FEATURES

- Dual Timer Circuits
- Less number of External Components
- Package Outline DIP14, DMP14
- Bipolar Technology

■ PIN CONFIGURATION

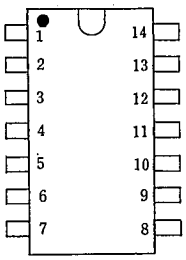

NJM556D
NJM556M

PIN FUNCTION

1. Discharge A	8. Trigger B
2. Threshold A	9. Output B
3. Control A	10. Reset B
4. Reset A	11. Control B
5. Output A	12. Threshold B
6. Trigger A	13. Discharge B
7. Ground	14. V^+

■ EQUIVALENT CIRCUIT (1/2 Shown)

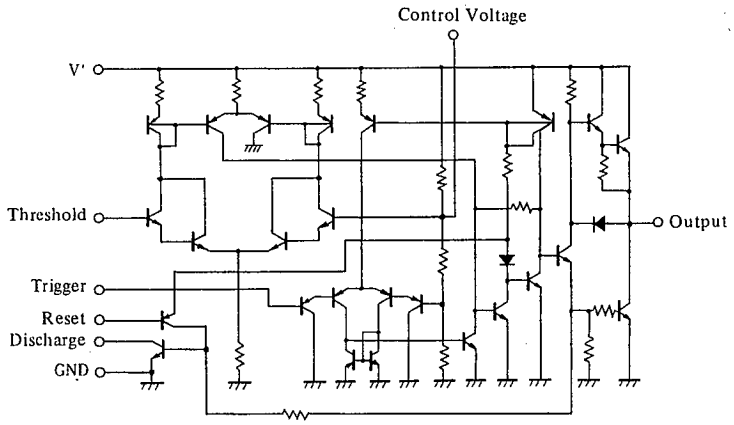

■ ABSOLUTE MAXIMUM RATINGS

(Ta=25℃)

PARAMETER	SYMBOL	RATINGS	UNIT
Supply Voltage	V^+	18	V
Power Dissipation	P_D	(DIP14) 570	mW
		(DMP14) 700(note)	mW
Operating Temperature Range	T_{opr}	−40～+85	℃
Storage Temperature Range	T_{stg}	−40～+125	℃

(note) At on PC board

■ ELECTRICAL CHARACTERISTICS

(V^+=+5～+15V, Ta=25℃)

PARAMETER	SYMBOL	TEST CONDITION	MIN.	TYP.	MAX.	UNIT
Operating Voltage	V^+		4.5	—	16	V
Operating Current (Note 2)	I_{CC}	V^+=5V, R_L=∞ (Each Section)	—	3	6	mA
Operating Current (Note 2)	I_{CC}	V^+=15V, R_L=∞ (Each Section)	—	10	14	mA
Threshold Voltage	V_{TH}		—	2/3	—	×V^+
Trigger Voltage	V_T	V^+=15V	—	5	—	V
Trigger Voltage	V_T	V^+=5V	—	1.67	—	V
Trigger Current	I_T		—	0.5	—	μA
Reset Voltage	V_R		0.4	0.7	1.0	V
Reset Current	I_R		—	0.1	—	mA
Threshold Current	I_T		—	0.03	0.1	μA
Control Voltage Level	V_{CL}	V^+=15V	9	10	11	V
Control Voltage Level	V_{CL}	V^+=5V	2.6	3.33	4	V
Output Voltage Drop (Low)	V_{OL}	V^+=15V I_{SINK}=10mA	—	0.1	0.25	V
Output Voltage Drop (Low)	V_{OL}	V^+=15V I_{SINK}=50mA	—	0.4	0.75	V
Output Voltage Drop (Low)	V_{OL}	V^+=15V I_{SINK}=100mA	—	2	2.75	V
Output Voltage Drop (Low)	V_{OL}	V^+=15V I_{SINK}=200mA	—	2.5	—	V
Output Voltage Drop (Low)	V_{OL}	V^+=5V I_{SINK}=5mA	—	0.25	0.35	V
Output Voltage Drop (High)	V_{OH}	V^+=15V I_{SOURCE}=200mA	—	12.5	—	V
Output Voltage Drop (High)	V_{OH}	V^+=15V I_{SOURCE}=100mA	12.75	13.3	—	V
Output Voltage Drop (High)	V_{OH}	V^+=15V I_{SOURCE}=40mA	—	13.5	—	V
Output Voltage Drop (High)	V_{OH}	V^+=5V I_{SOURCE}=100mA	2.75	3.3	—	V

(Note 2) Operating Current when output high typically 2mA less.

PARAMETER		SYMBOL	TEST CONDITION	MIN.	TYP.	MAX.	UNIT
Timing Error	Initial Accuracy	E_{ta}	R_A, R_B=2k～100kΩ, C=0.1μF	—	2.25	—	%
(Free Running)	vs. Temperature	E_{ta}	R_A, R_B=2k～100kΩ, C=0.1μF	—	150	—	ppm/°C
(Note 3)	vs. Operating Voltage	E_{ta}	R_A, R_B=2k～100kΩ, C=0.1μF	—	0.3	—	%/Volt
Timing Error	Initial Accuracy	E_{tm}	R_A, R_B=2k～100kΩ, C=0.1μF	—	0.75	—	%
(Monostable)	vs. Temperature	E_{tm}	R_A, R_B=2k～100kΩ, C=0.1μF	—	50	—	ppm/°C
(Note 3)	vs. Operating Voltage	E_{tm}	R_A, R_B=2k～100kΩ, C=0.1μF	—	0.1	—	%/Volt
Matching Characteristics	Initial Accuracy			—	0.5	1	%
Between Each Section	vs. Temperature			—	±10	—	ppm/°C
	vs. Operating Voltage			—	0.2	0.5	%/Volt

(Note 3): Tested at V^+=+5V～+15V

■ TYPICAL APPLICATION

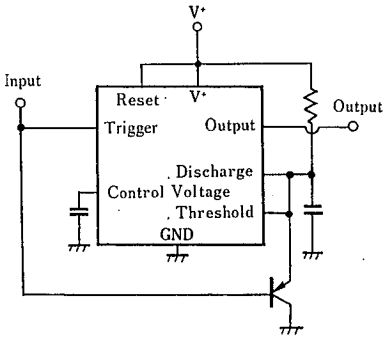

Missing pulse Ditection Circuit

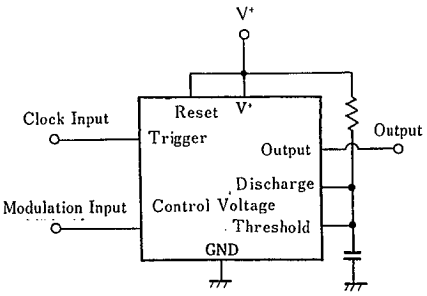

Pulse Width Moduration Circuit

■ TYPICAL CHARACTERISTICS

Delay Time vs. Operating Voltage

(Ta=25°C)

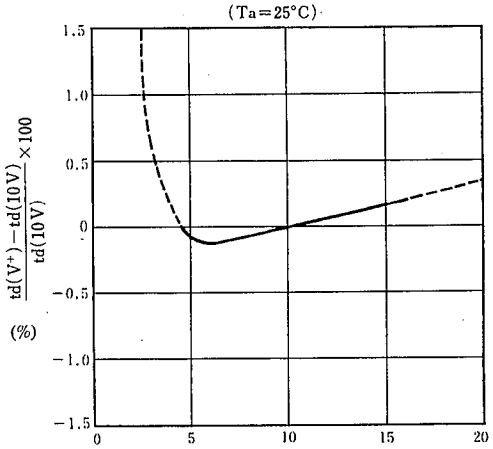

High Output Voltage Drop vs. Output Source Current

(5V ≦ V+ ≦ 15V)

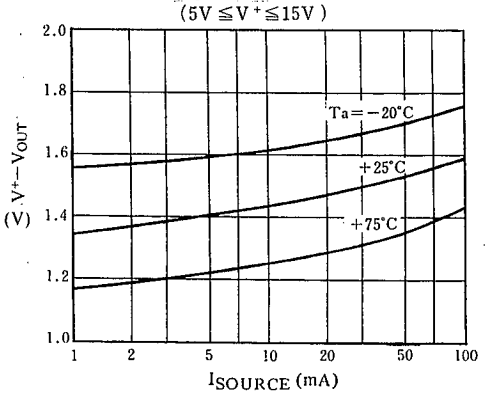

Low Output Voltage vs. Output Sink Current (V+ = 5 V)

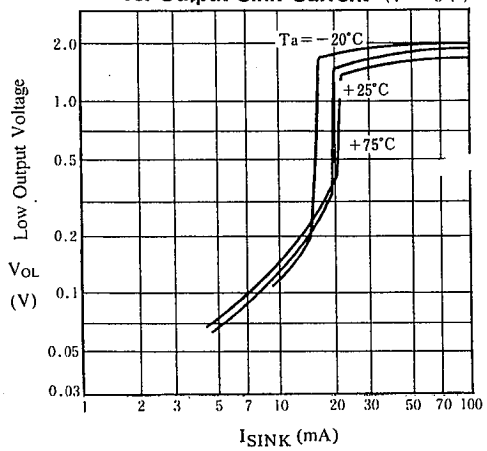

Low Output Voltage vs. Output Sink Current (V+ = 15V)

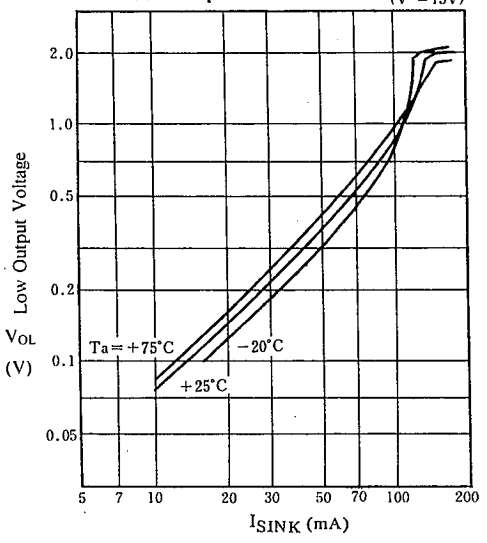

6

■ TYPICAL CHARACTERISTICS

Operating Current vs. Operating Voltage (V_O=L_{OW})

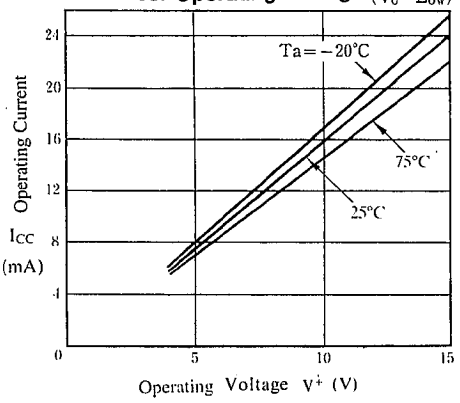

Delay time vs. Temperature (V^+=10V)

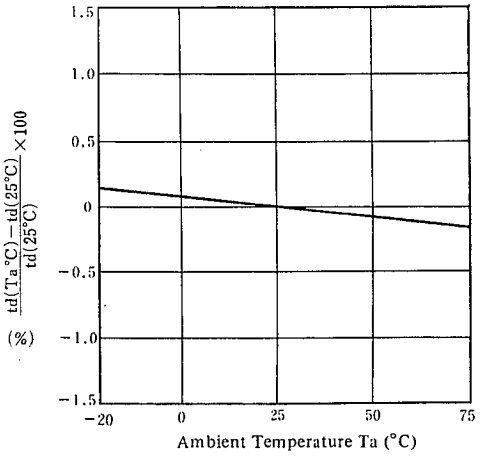

MEMO

[CAUTION]
The specifications on this databook are only given for information , without any guarantee as regards either mistakes or omissions. The application circuits in this databook are described only to show representative usages of the product and not intended for the guarantee or permission of any right including the industrial rights.