DOMINANT™
Opto Technologies
Innovating Illumination

DATA SHEET :

PrimaxN4014

60 InGaN White : NGW-WSG

Primax

Synonymous with function and performance, enter the Primax, the new era of high intensity illumination in LED. With its high flux output and high luminous intensity, Primax transcends today LED lightings technology and how we perceive it.



Features:



- > Super high brightness surface mount LED
- > 120° viewing angle.
- > Compact package outline (LxW) of 4.0 x 1.4 mm.
- > Ultra low height profile - 0.7mm.
- > Low thermal resistance.
- > Compatible to IR reflow soldering.
- > Environmental friendly; RoHS compliance.
- > Good colour rendering index; CRI min 70.



Applications:

- > Lighting: garden light, architecture lighting, general lighting. etc
- > Backlighting (TFT LCD display), flash light, architectural lighting.

All rights reserved. Product specifications are subject to change without notice.

Optical Characteristics at Tj=25°C

Part Ordering Number	Color	CRI Typ.	Viewing Angle°	Luminous Intensity @ 60mA (mcd) Min.	Typ.	Max.
NGW-WSG-4ZDA-1	White	75	120	6370.0	7200.0	9000.0

NOTE
1. Luminous intensity is measured with an accuracy of ± 11%.
2. Color binning is carried for all units as per the wavelength-binning table. Only one color group is allowed for each reel.
3. High color rendering index (CRI). Minimum CRI of 70.

Electrical Characteristics at Tj=25°C

Part Number	Vf @ If = 60 mA Min. (V)	Typ. (V)	Max. (V)	Vr @ Ir = 10 µA Min. (V)
NGW-WSG	2.9	3.2	3.6	5.0

Forward Voltages are tested using a current pulse of 1 ms and has an accuracy of ± 0.1 V.

Absolute Maximum Ratings

	Maximum Value	Unit
DC forward current	70	mA
Peak pulse current	100	mA
Reverse voltage	5	V
ESD threshold (HBM)	2000	V
LED junction temperature	125	˚C
Operating temperature	-40 … +85	˚C
Storage temperature	-40 … +100	˚C
Thermal resistance - Junction / ambient, $R_{th\ JA}$ - Junction / solder point, $R_{th\ JS}$ (Mounted on dual sided FR4 in house PCB, total Cu area >900mm^2)	 230 45	 K/W K/W

NGW-WSG, White Color Grouping

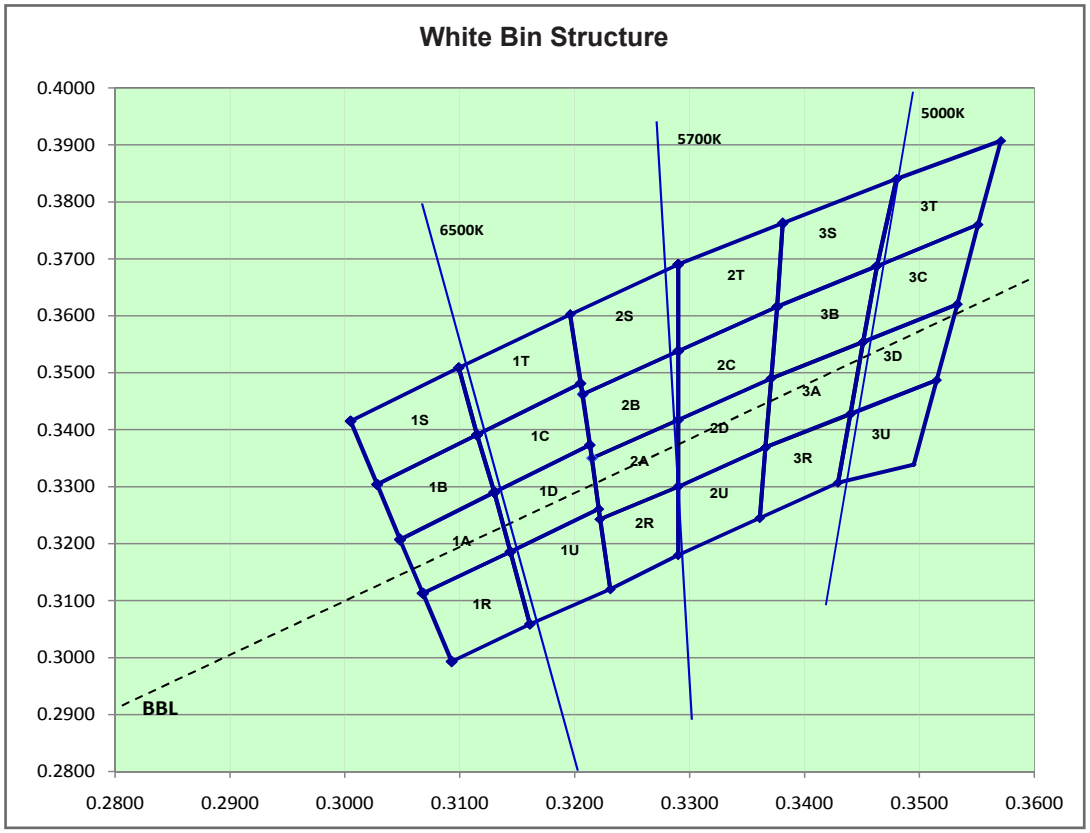

Chromaticity coordinate groups are measured with an accuracy of ± 0.01.

Bin		1	2	3	4
1A	Cx	0.3048	0.3130	0.3144	0.3068
	Cy	0.3207	0.3290	0.3186	0.3113
1R	Cx	0.3068	0.3144	0.3161	0.3093
	Cy	0.3113	0.3186	0.3059	0.2993
2A	Cx	0.3215	0.3290	0.3290	0.3222
	Cy	0.3350	0.3417	0.3300	0.3243
2R	Cx	0.3222	0.3290	0.3290	0.3231
	Cy	0.3243	0.3300	0.3180	0.3120
3A	Cx	0.3371	0.3451	0.3440	0.3366
	Cy	0.3490	0.3554	0.3427	0.3369
3R	Cx	0.3366	0.3440	0.3429	0.3361
	Cy	0.3369	0.3428	0.3307	0.3245
1B	Cx	0.3028	0.3115	0.3130	0.3048
	Cy	0.3304	0.3391	0.3290	0.3207
1S	Cx	0.3005	0.3099	0.3115	0.3028
	Cy	0.3415	0.3509	0.3391	0.3304
2B	Cx	0.3207	0.3290	0.3290	0.3215
	Cy	0.3462	0.3538	0.3417	0.3350
2S	Cx	0.3196	0.3290	0.3290	0.3207
	Cy	0.3602	0.3690	0.3538	0.3462

Bin		1	2	3	4
3B	Cx	0.3376	0.3463	0.3451	0.3371
	Cy	0.3616	0.3687	0.3554	0.3490
3S	Cx	0.3381	0.3480	0.3463	0.3376
	Cy	0.3762	0.3840	0.3687	0.3616
1C	Cx	0.3115	0.3205	0.3213	0.3130
	Cy	0.3391	0.3481	0.3373	0.3290
1T	Cx	0.3099	0.3196	0.3205	0.3115
	Cy	0.3509	0.3602	0.3481	0.3391
2C	Cx	0.3290	0.3376	0.3371	0.3290
	Cy	0.3538	0.3616	0.3490	0.3417
2T	Cx	0.3290	0.3381	0.3376	0.3290
	Cy	0.3690	0.3762	0.3616	0.3538
3C	Cx	0.3463	0.3551	0.3533	0.3451
	Cy	0.3687	0.3760	0.3620	0.3554
3T	Cx	0.3480	0.3571	0.3551	0.3463
	Cy	0.3840	0.3907	0.3760	0.3687
1D	Cx	0.3130	0.3213	0.3221	0.3144
	Cy	0.3290	0.3373	0.3261	0.3186
1U	Cx	0.3144	0.3221	0.3231	0.3161
	Cy	0.3186	0.3261	0.3120	0.3059
2D	Cx	0.3290	0.3371	0.3366	0.3290
	Cy	0.3417	0.3490	0.3369	0.3300
2U	Cx	0.3290	0.3366	0.3361	0.3290
	Cy	0.3300	0.3369	0.3245	0.3180
3D	Cx	0.3451	0.3533	0.3515	0.3440
	Cy	0.3554	0.3620	0.3487	0.3427
3U	Cx	0.3440	0.3515	0.3495	0.3429
	Cy	0.3428	0.3487	0.3339	0.3307

Dominant color coordinate is measured with an accuracy of ± 0.01.

Luminous Intensity Group

Brightness Group	Luminous Intensity IV (mcd)	Luminous Flux IV (lm) Typ.
4Z	6370.0 ... 7150.0	19.6
CA	7150.0 ... 8070.0	22.1
DA	8070.0 ... 9000.0	24.8

Luminous intensity is measured with an accuracy of ± 11%.

Vf Binning

Vf Bin @ 60mA	Forward Voltage (V)
V1	2.90 ... 3.00
V2	3.00 ... 3.10
V3	3.10 ... 3.20
V4	3.20 ... 3.30
V5	3.30 ... 3.40
V6	3.40 ... 3.50
V7	3.50 ... 3.60

Forward voltage, Vf is measured with an accuracy of ± 0.1 V.

Relative Intensity Vs Forward Current

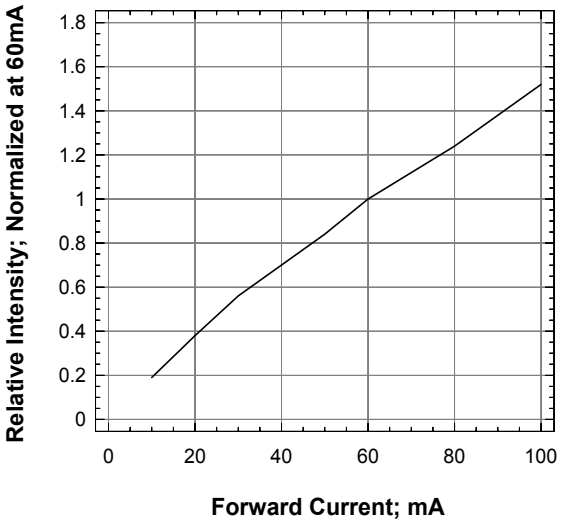

Forward Voltage Vs Forward Current

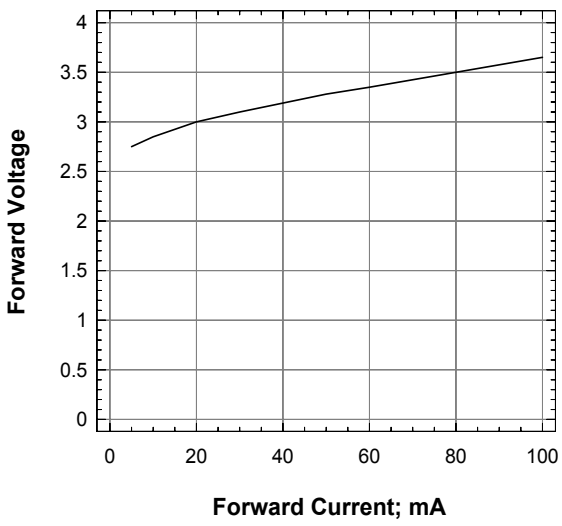

Relative Intensity Vs Wavelength

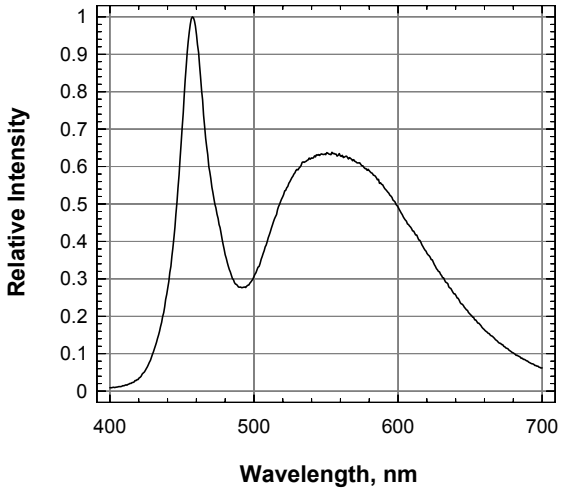

Maximum Current Vs Ambient Temperature

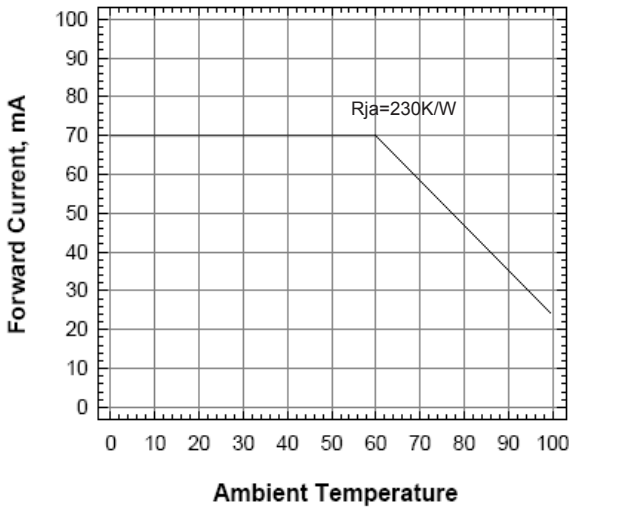

Radiation Pattern

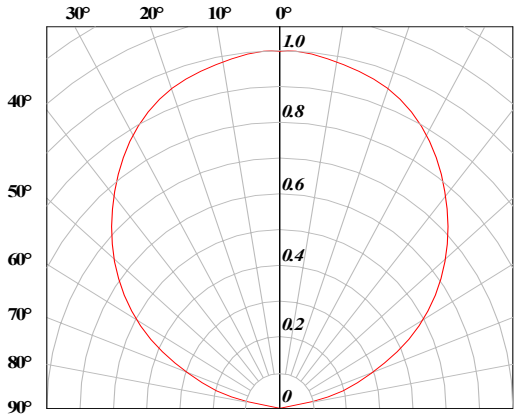

PrimaxN4104 • 60 InGaN White: NGW-WSG Package Outlines

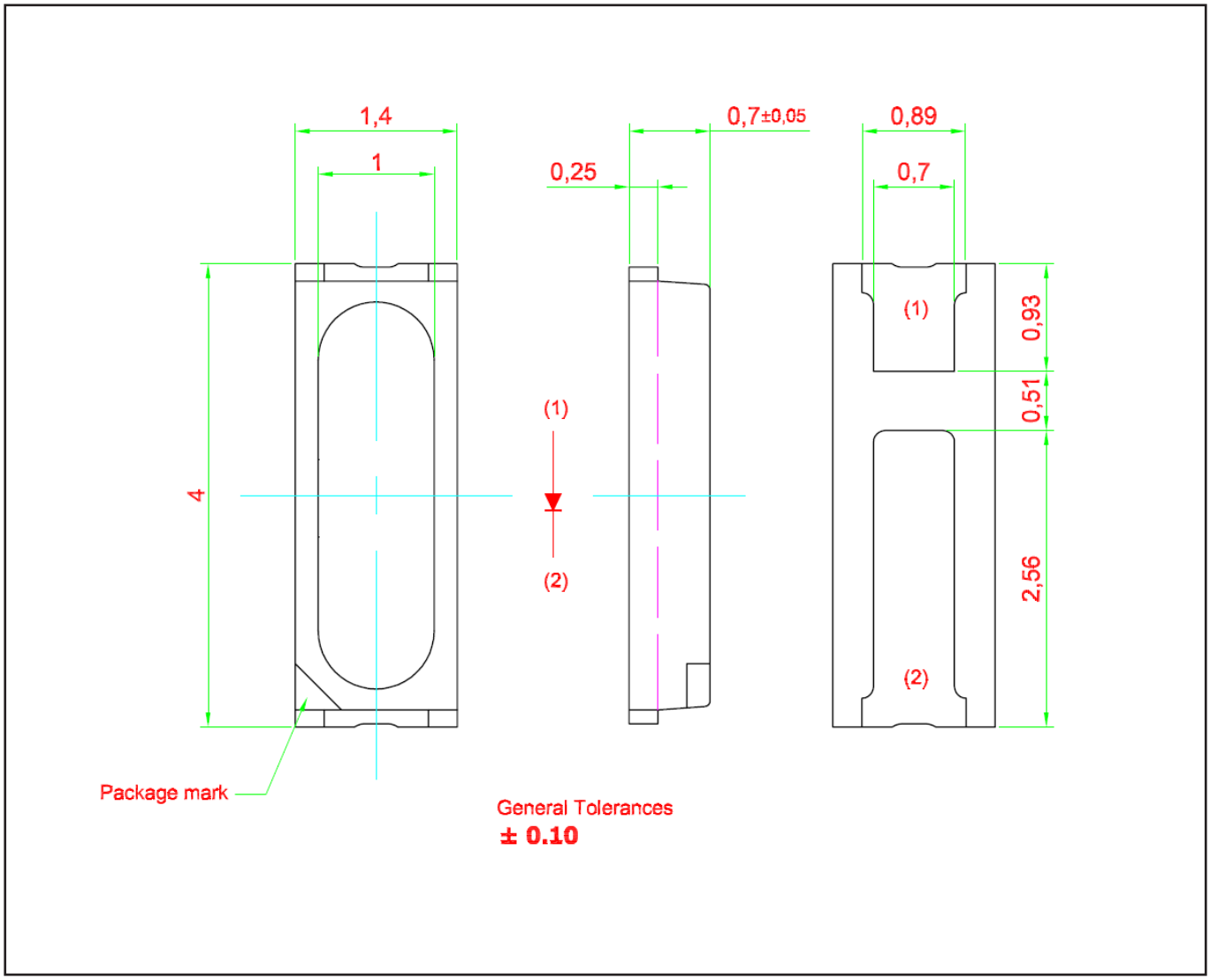

Material

	Material
Lead-frame	Cu Alloy With Ag Plating
Package	High Temperature Resistant Plastic, PPA
Encapsulant	Silicone Resin
Soldering Leads	Ag Plating

Recommended Solder Pad

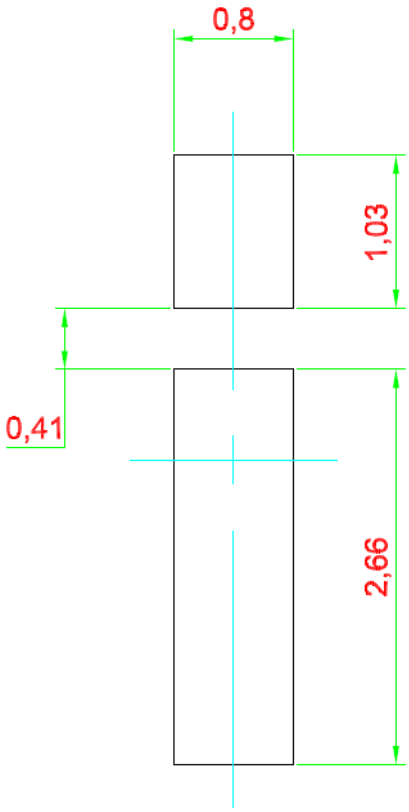

Taping and orientation

- Reels come in quantity of 2000 units.
- Reel diameter is 180

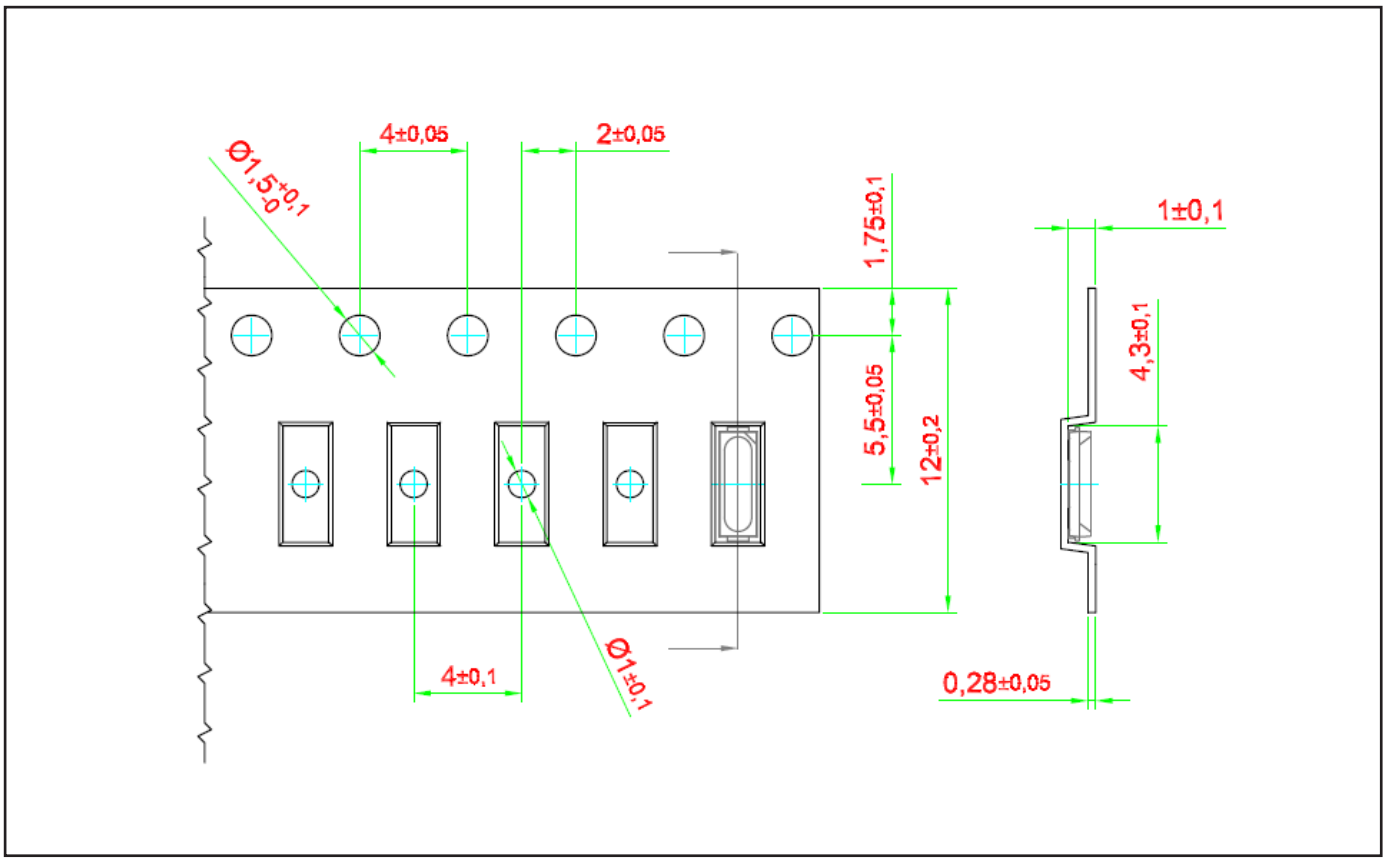

Packaging Specification

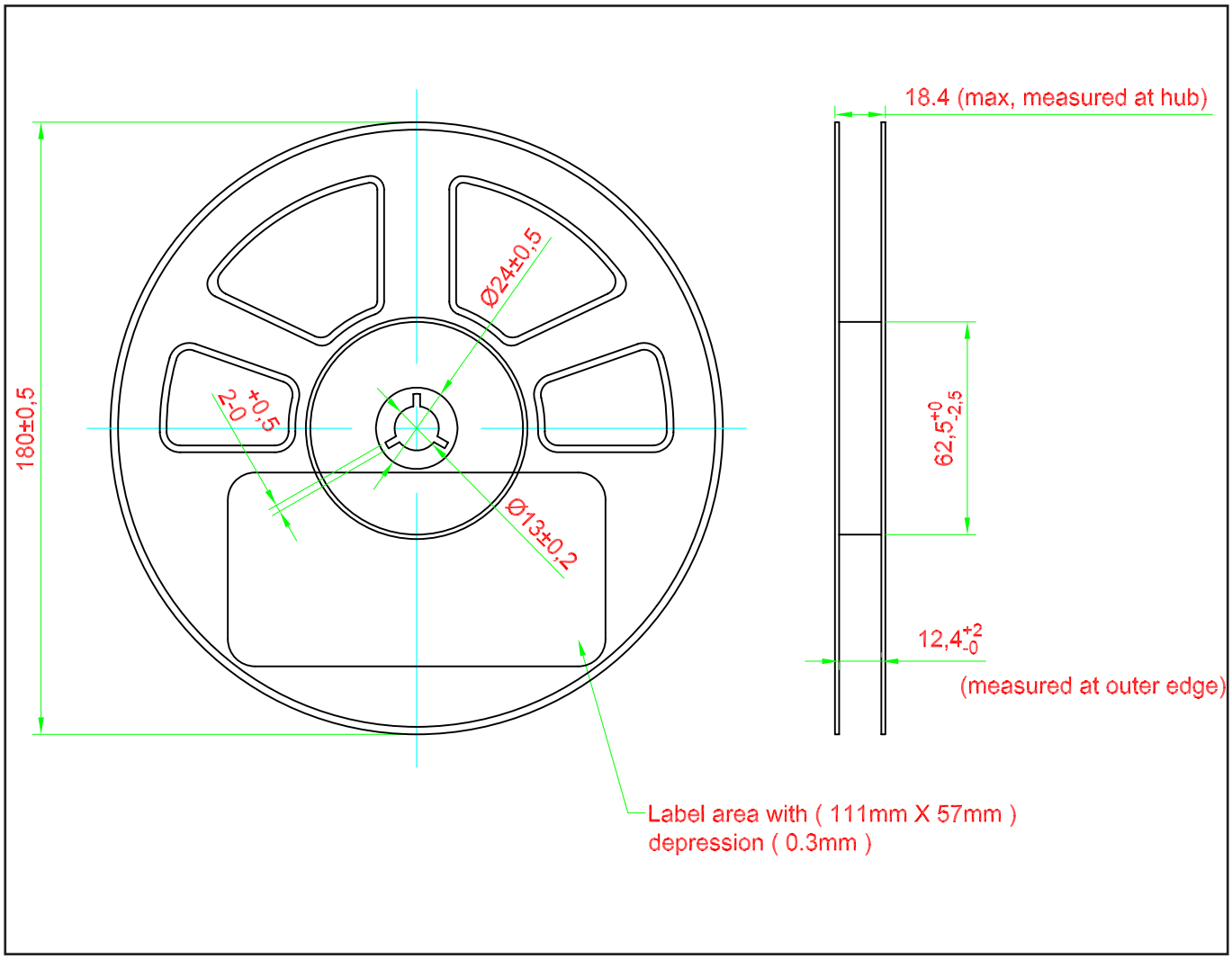

Packaging Specification

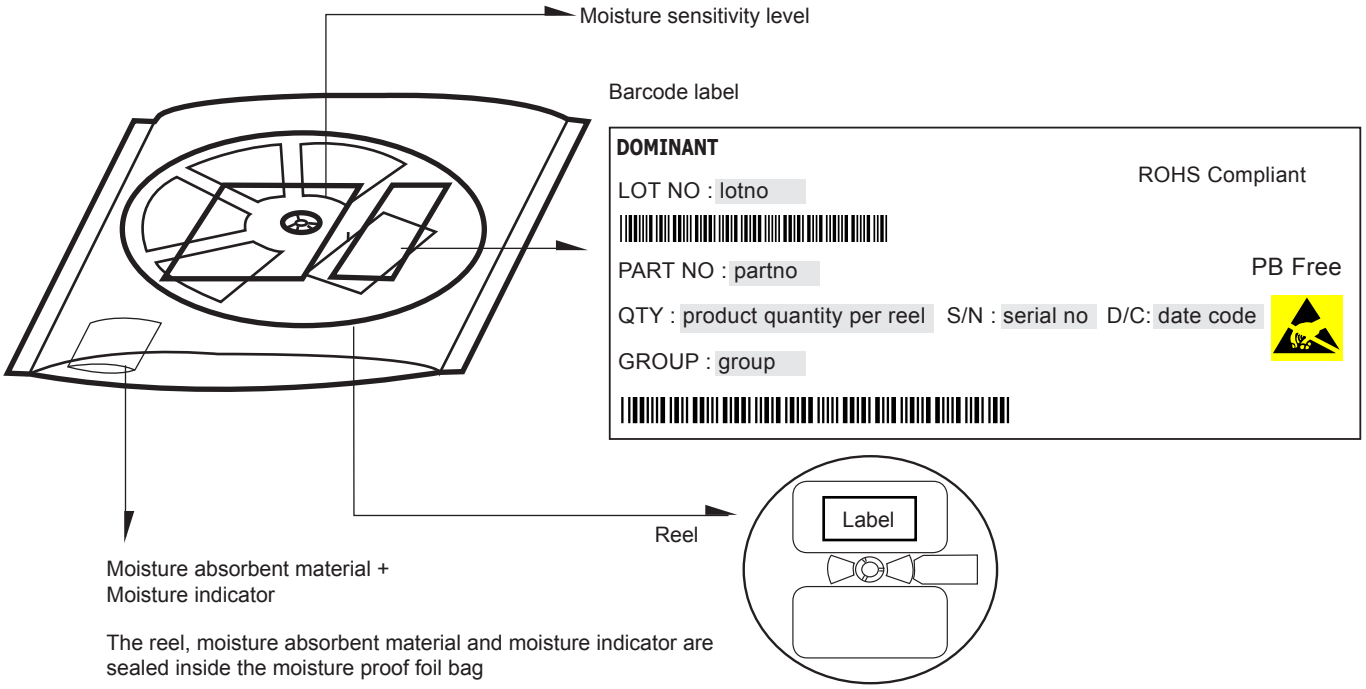

	Average 1pc PrimaxN4014	1 completed bag (2000pcs)
Weight (gram)	**0.0108**	**150 ± 10**

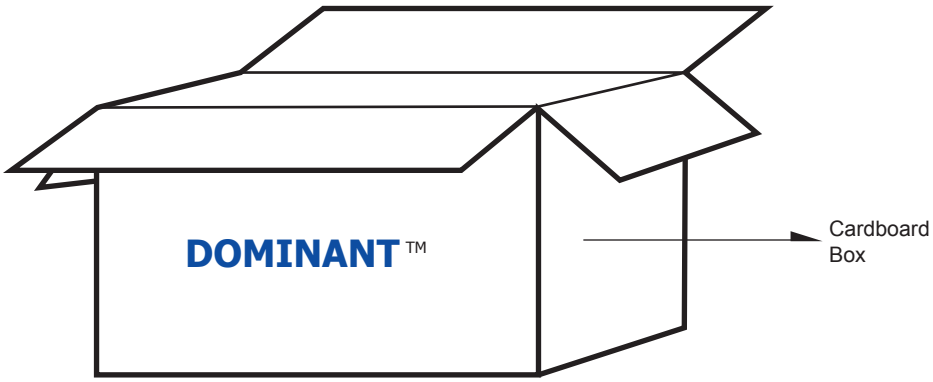

For PrimaxN4014

Cardboard Box Size	Dimensions (mm)	Empty Box Weight (kg)	Reel / Box	Quantity / Box (pcs)
Small	300 x 250 x 250	0.58	15 reels MAX	30,000 MAX
Large	416 x 516 x 476	1.74	96 reels MAX	192,000 MAX

Recommended Pb-free Soldering Profile

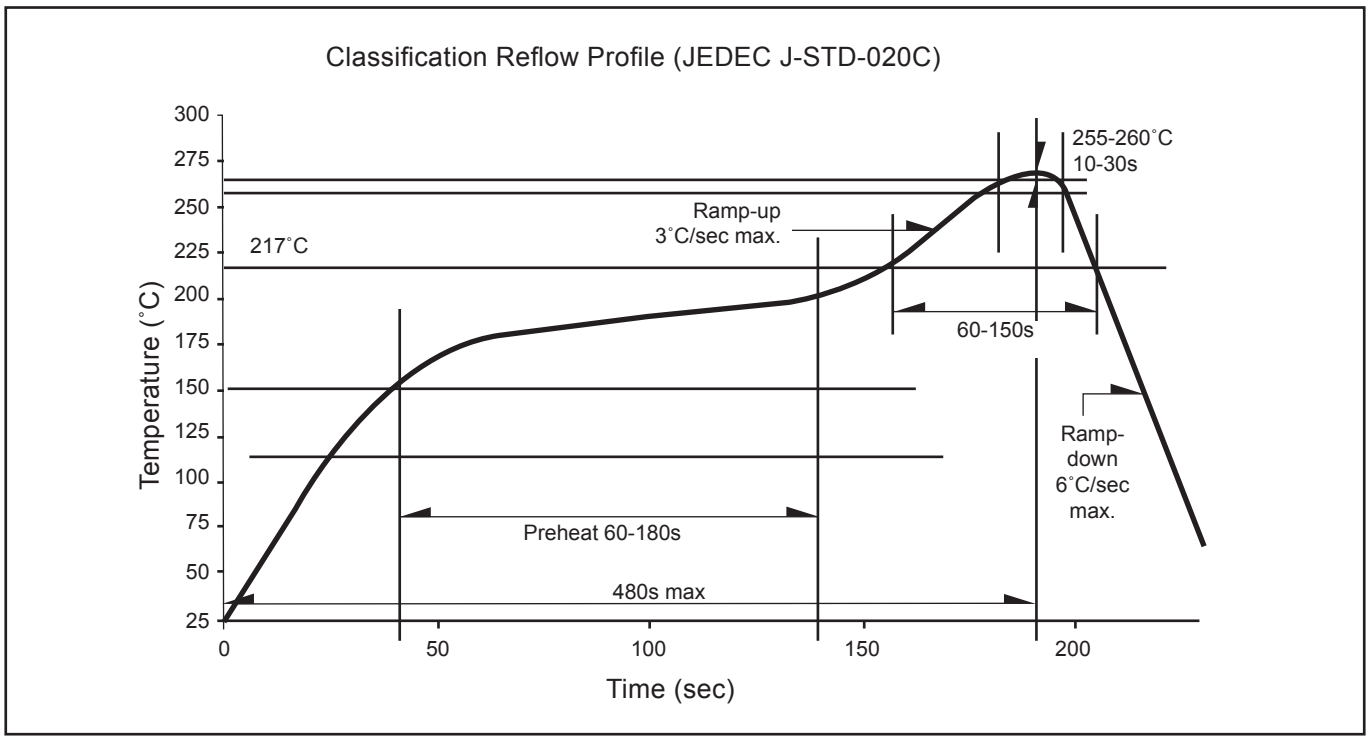

Revision History

Page	Subjects	Date of Modification
-	Initial Release	16 Apr 2013
3, 4	Update Color Bin Structure	27 Jun 2013
11	Typo error on weight	14 Nov 2013
2	Add Thermal Resistance	11 Mar 2014

NOTE

All the information contained in this document is considered to be reliable at the time of publishing. However, DOMINANT Opto Technologies does not assume any liability arising out of the application or use of any product described herein.

DOMINANT Opto Technologies reserves the right to make changes to any products in order to improve reliability, function or design.

DOMINANT Opto Technologies products are not authorized for use as critical components in life support devices or systems without the express written approval from the Managing Director of DOMINANT Opto Technologies.

About Us

DOMINANT Opto Technologies is a dynamic Malaysian Corporation that is among the world's leading SMT LED Manufacturers. An excellence – driven organization, it offers a comprehensive product range for diverse industries and applications. Featuring an internationally certified quality assurance acclaim, DOMINANT's extra bright LEDs are perfectly suited for various lighting applications in the automotive, consumer and communications as well as industrial sectors. With extensive industry experience and relentless pursuit of innovation, DOMINANT's state-of-art manufacturing, research and testing capabilities have become a trusted and reliable brand across the globe. More information about DOMINANT Opto Technologies can be found on the Internet at http://www.dominant-semi.com.

Please contact us for more information:

DOMINANT Opto Technologies Sdn. Bhd
Lot 6, Batu Berendam, FTZ Phase III, 75350 Melaka, Malaysia.
Tel: +606 283 3566 Fax: +606 283 0566
E-mail: sales@dominant-semi.com



DOMINANT™
Opto Technologies
Innovating Illumination