75W Dual Output Switching Power Supply

NED-75 series

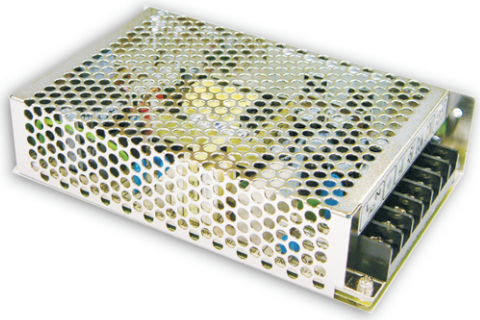

Features :

- Universal AC input / Full range
- Protections: Short circuit / Overload / Over voltage
- Cooling by free air convection
- 100% full load burn-in test
- 2 years warranty

SPECIFICATION

MODEL		NED-75A		NED-75B	
OUTPUT	OUTPUT NUMBER	CH1	CH2	CH1	CH2
	DC VOLTAGE	5V	12V	5V	24V
	RATED CURRENT	7A	3A	5A	2A
	CURRENT RANGE Note.6	1 ~ 8A	0.3 ~ 4A	1 ~ 6A	0.2 ~ 3A
	RATED POWER	71W		73W	
	RIPPLE & NOISE (max.) Note.2	80mVp-p	120mVp-p	80mVp-p	200mVp-p
	VOLTAGE ADJ. RANGE	CH1: 4.75 ~ 5.5V		CH1: 4.75 ~ 5.5V	
	VOLTAGE TOLERANCE Note.3	±2.0%	±6.0%	±2.0%	±6.0%
	LINE REGULATION Note.4	±0.5%	±1.0%	±0.5%	±1.0%
	LOAD REGULATION Note.5	±1.5%	±3.0%	±1.5%	±3.0%
	SETUP, RISE TIME	500ms, 30ms/230VAC 1200ms, 30ms/115VAC at full load			
	HOLD UP TIME (Typ.)	50ms/230VAC 10ms/115VAC at full load			
INPUT	VOLTAGE RANGE	85 ~ 264VAC 120 ~ 370VDC			
	FREQUENCY RANGE	47 ~ 63Hz			
	EFFICIENCY (Typ.)	78%		81%	
	AC CURRENT (Typ.)	1.5A/115VAC 0.9A/230VAC			
	INRUSH CURRENT (Typ.)	COLD START 45A			
	LEAKAGE CURRENT	<2mA / 240VAC			
PROTECTION	OVERLOAD	110 ~ 150% rated output power			
		Protection type : Hiccup mode, recovers automatically after fault condition is removed			
	OVER VOLTAGE	CH1: 5.75 ~ 6.75V			
		Protection type : Shut down o/p voltage, re-power on to recover			
ENVIRONMENT	WORKING TEMP.	-20 ~ +60℃ (Refer to output load derating curve)			
	WORKING HUMIDITY	20 ~ 90% RH non-condensing			
	STORAGE TEMP., HUMIDITY	-40 ~ +85℃, 10 ~ 95% RH			
	TEMP. COEFFICIENT	±0.03%/℃ (0 ~ 45℃)			
	VIBRATION	10 ~ 500Hz, 2G 10min./1cycle, period for 60min. each along X, Y, Z axes			
SAFETY & EMC (Note 7)	SAFETY STANDARDS	UL60950-1, CB(IEC60950-1) approved			
	WITHSTAND VOLTAGE	I/P-O/P:3KVAC I/P-FG:1.5KVAC O/P-FG:0.5KVAC			
	ISOLATION RESISTANCE	I/P-O/P, I/P-FG, O/P-FG:100M Ohms / 500VDC / 25℃ / 70% RH			
	EMI CONDUCTION & RADIATION	Compliance to EN55022 (CISPR22) Class B			
	HARMONIC CURRENT	Compliance to EN61000-3-2,-3			
	EMS IMMUNITY	Compliance to EN61000-4-2, 3, 4, 5, 6, 8,11, ENV50204, EN55024, EN61000-6-1, light industry level, criteria A			
OTHERS	MTBF	381.3K hrs min. MIL-HDBK-217F (25℃)			
	DIMENSION	159*97*38mm (L*W*H)			
	PACKING	0.52Kg; 30pcs/16.6Kg/0.97CUFT			
NOTE	1. All parameters NOT specially mentioned are measured at 230VAC input, rated load and 25℃ of ambient temperature. 2. Ripple & noise are measured at 20MHz of bandwidth by using a 12" twisted pair-wire terminated with a 0.1uf & 47uf parallel capacitor. 3. Tolerance : includes set up tolerance, line regulation and load regulation. 4. Line regulation is measured from low line to high line at rated load. 5. Load regulation is measured from 20% to 100% rated load, and other output at 60% rated load. 6. Each output can work within current range. But total output power can't exceed rated output power. 7. The power supply is considered a component which will be installed into a final equipment. The final equipment must be re-confirmed that it still meets EMC directives. For guidance on how to perform these EMC tests, please refer to "EMI testing of component power supplies." (as available on http://www.meanwell.com)				

■ Mechanical Specification

Case No. 901 Unit:mm

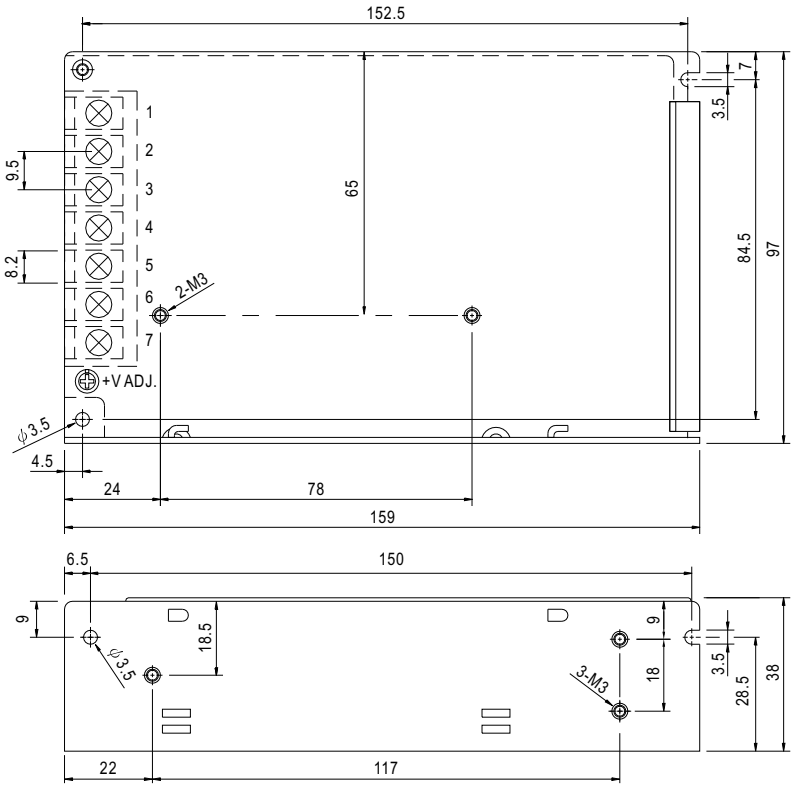

Terminal Pin No. Assignment

Pin No.	Assignment	Pin No.	Assignment
1	AC/L	5	DC OUTPUT +V2
2	AC/N	6	DC OUTPUT COM
3	FG ⏚	7	DC OUTPUT +V1
4	DC OUTPUT COM		

■ Block Diagram

fosc : 60KHz

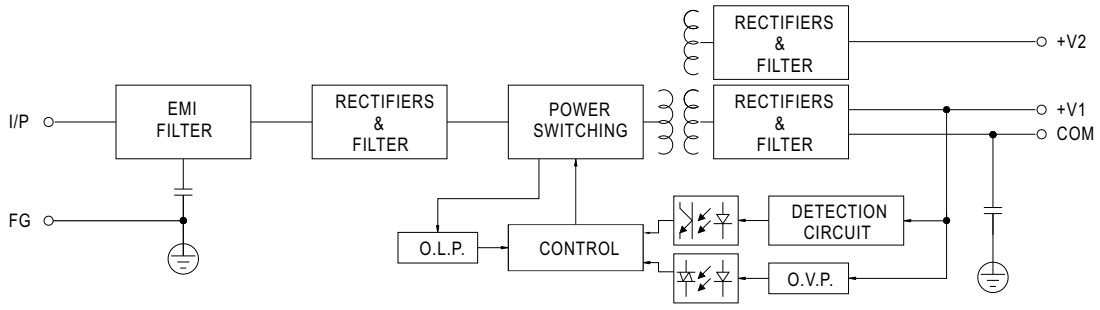

■ Derating Curve

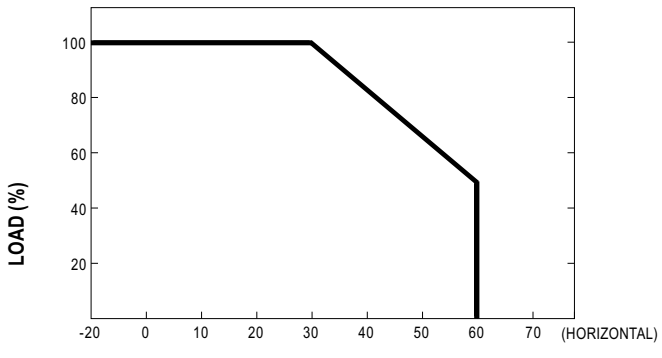

AMBIENT TEMPERATURE (℃)

■ Output Derating VS Input Voltage

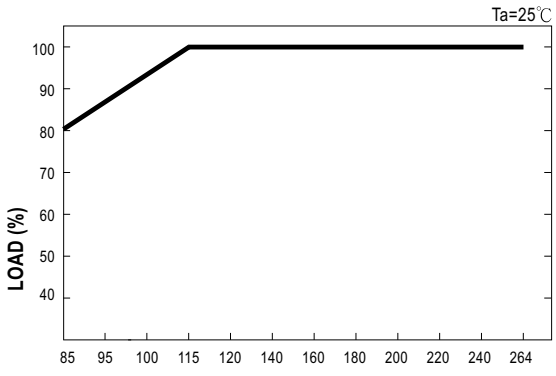

INPUT VOLTAGE (VAC) 60Hz