NICHIA

*SkyBlue Laser Diode*

# *NDS4216*

## ■Features

- Peak Wavelength: 488nm
- Optical Output Power: **CW 200mW (@Tc=25°C)**
- Can Type: $\phi$5.6 Floating Mounted with Photo Diode and Zener Diode

## ■Absolute Maximum Ratings

| Item | Symbol | Absolute Maximum Ratings | Unit |
|---|---|---|---|
| Optical Output Power (Tc=25°C)* | Po | 240 | mW |
| Allowable Reverse Current | Ir (LD) | 85 | mA |
| PD Reverse Voltage | Vr (PD) | 5 | V |
| Storage Temperature | Tstg | -40 ~ 85 | °C |
| Operating Case Temperature | Tc | 10 ~ 60 | °C |

## ■Initial Electrical/Optical Characteristics

(Tc=25°C)

| Item | | Condition | Symbol | Min | Typ. | Max | Unit |
|---|---|---|---|---|---|---|---|
| Optical Output Power* | | CW | Po | - | - | 200 | mW |
| Peak Wavelength | | Po=200mW | λp | 483 | 488 | 493 | nm |
| Threshold Current | | CW | Ith | 25 | 40 | 70 | mA |
| Operating Current | | Po=200mW | Iop | 200 | 270 | 350 | mA |
| Slope Efficiency | | CW | η | 0.7 | 0.9 | 1.5 | W/A |
| Operating Voltage | | Po=200mW | Vop | 5.0 | 6.0 | 7.0 | V |
| Beam Divergence** | Parallel | Po=200mW | θ// | 7.0 | 8.5 | 12.5 | ° |
| | Perpendicular | Po=200mW | θ⊥ | 19.0 | 23.5 | 27.0 | ° |
| Beam Pointing Accuracy | Parallel | Po=200mW | Δθ// | -2.5 | - | 2.5 | ° |
| | Perpendicular | Po=200mW | Δθ⊥ | -3.0 | - | 3.0 | ° |
| Monitor Current*** | | Po=200mW | Im | 0.2 | 2.0 | 3.0 | mA |

* Refer graph of Optical Output Power vs. Case Temperature
** Full angle at 50% from peak intensity
*** Monitor Current is short time power reference purpose only.
Not guaranteed for accuracy.

## Outline Dimension

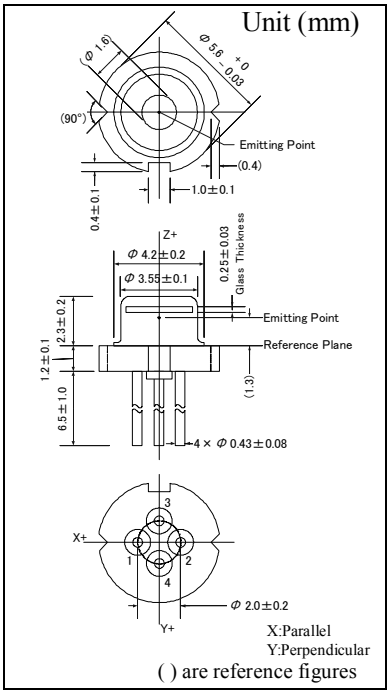


## Pin Connection

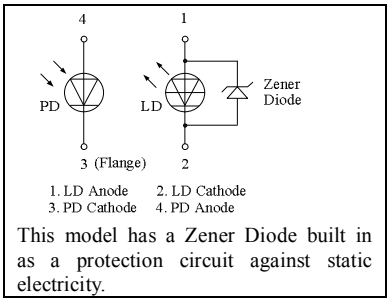


This model has a Zener Diode built in as a protection circuit against static electricity.

◆ **Optical Output Power vs. Case Temperature**

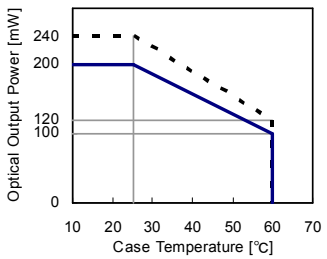


All figures in this specification are measured by Nichia's method and may contain measurement deviations.

The above specifications are for reference purpose only and subjected to change without prior notice.

## Safety of Laser light

- **Laser Light can damege the human eyes and skin.** Do not expose the eye or skin to any laser light directly and/or through optical lens. When handling the LDs, wear appropriate safety glasses to prevent laser light, even any reflections from entering to the eye. Focused laser beam through optical instruments will increase the chance of eye hazard.
- These LDs are classified in **Class 4 of IEC60825-1 and 21 CFR Part 1040.10 Safety Standards**. It is absolutely necessary to take overall safety measures against User's modules, equipment and systems into which Nichia LDs are incorporated and/or integrated.




**NICHIA CORPORATION**
http://www.nichia.co.jp

◆ HEADQUARTERS
491 Oka, Kaminaka-Cho, Anan-Shi, TOKUSHIMA 774-8601, JAPAN
PHONE: +81-884-22-2311 FAX: +81-884-21-0148
◆ CONTACT
TOKYO SALES OFFICE
13F Tamachi Center Building 34-7, Shiba 5-Chome, Minato-Ku, TOKYO 108-0014, JAPAN
PHONE: +81-3-3456-3108 FAX: +81-3-5440-7330

## ■Typical Characteristics

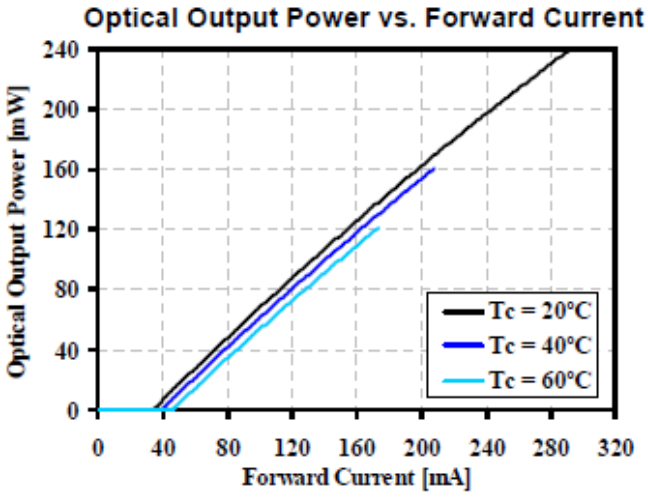


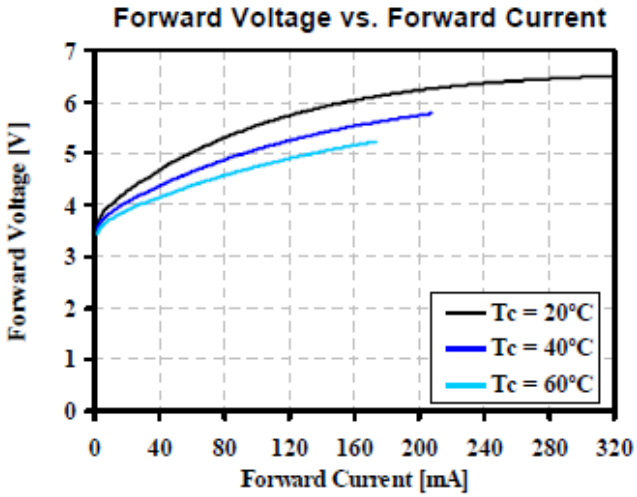


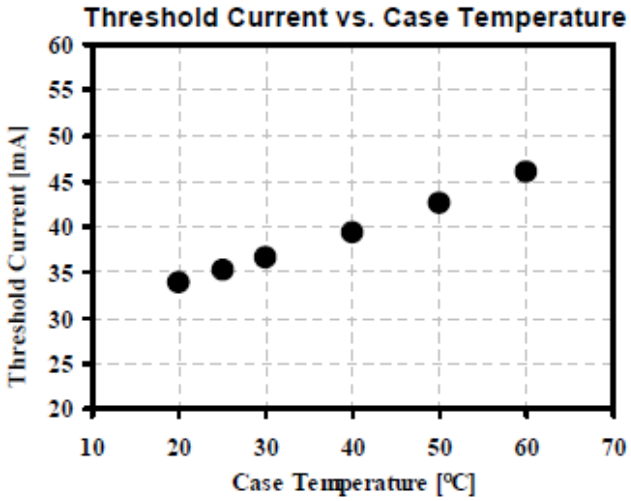


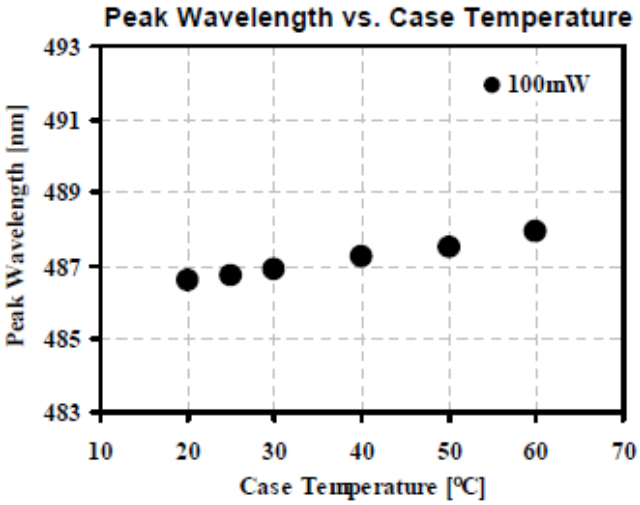


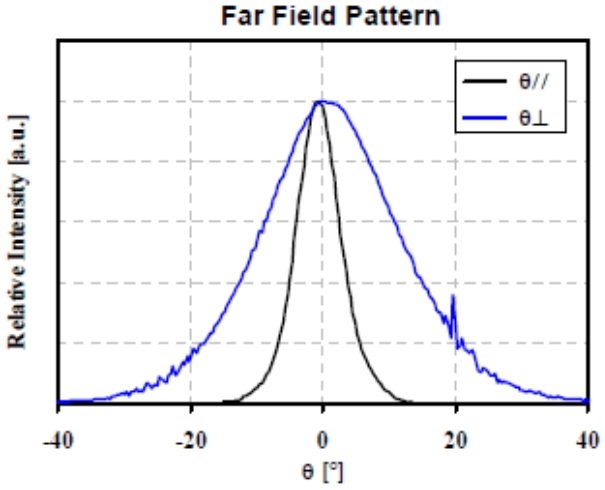


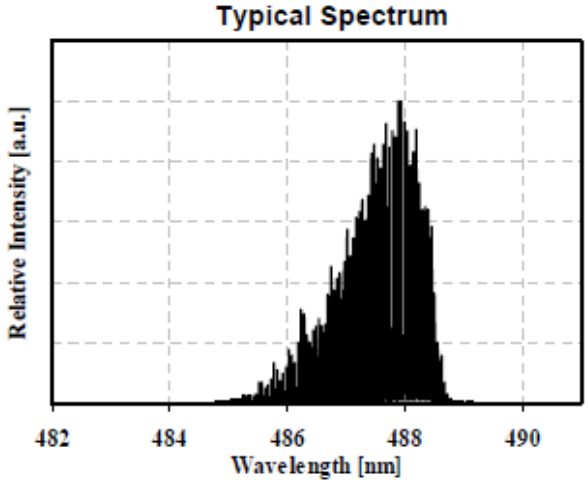

## ■Cautions

### (1) Operating method

- The LD shall change its forward voltage requirement and optical output power according to temperature change. Also, the LD will require more operation current to maintain same output power as it degrades.
- Confirm that the optical output power generated by spike current when switching on and off does not exceed the maximum absolute rating. Also, employ appropriate countermeasures to reduce chattering and/or overshooting in the Circuit.

### (2) Static Electricity

- Static electricity or electrical surges will reduce and degrade the reliability of the LDs. It is recommended to use a wrist strap or anti-electrostatic glove when handling the Product.

### (3) Absolute Maximum Rating

- Active layer of LDs shall have high current density and generate high electric field during its operation. In order to prevent excessive damage, the LD must be operated strictly below Absolute Max Rating.

### (4) Others

- Nichia LDs described in this brochure are intended to be used for ordinary electronic equipment (such as office equipment, communications equipment, measurement instruments and household appliances). Consult Nichia's sales staff in advance for information on the applications in which exceptional quality and reliability are required, particularly when the failure or malfunction of the LDs may directly jeopardize life or health (such as for airplanes, aerospace, submersible repeaters, nuclear reactor control systems, automobiles, traffic control equipment, life support systems and safety devices).
- The Purchaser must acknowledge that any LD can be failed statically and must design its equipments fail safe design. Prior to use of the LD, please confirm that the LD, as described in Nichia's specifications, meets the life expectancy needs of, and provides the features required by the Circuit and any related modules, equipment and/or systems.
- Nichia prohibit Purchaser from reverse engineering, disassembling, or taking any other steps to derive the structure or design of the LD.
- The appearance and specifications of the product may be modified for improvement without notice. The formal specifications must be exchanged and signed by both parties before large volume purchase begins.
- No unauthorized transmission or reproduction of this document, either in whole or in part, is permitted.