# NCT65

# Remote Trip Point Temperature Sensor with Overtemperature Shutdown

### Description

The NCT65 is a low power temperature monitor housed in an MSOP8 package. It monitors the temperature of a remote thermal diode. The resulting temperature is then compared with fixed $\overline{\text{THERM}}$ limits (70°C and 85°C) and if the resulting temperature is greater than these limits, the open-drain $\overline{\text{THERM1}}$ and $\overline{\text{THERM2}}$ pins are asserted. To prevent constant assertion and deassertion of the $\overline{\text{THERM}}$ outputs the NCT65 has 5°C of hysteresis.

The NCT65 supply range is 2.8 V to 3.6 V and features low supply current making it suitable for portable applications.

### Features

- Remote Temperature Sensor
- 0°C – 85°C Measurement Range
- Two Overtemperature $\overline{\text{THERM}}$ Shutdown Pins
- $\overline{\text{THERM1}}$ Trip Point = 70°C, $\overline{\text{THERM2}}$ Trip Point = 85°C
- Low Power Operation
- MSOP Package
- These Devices are Pb-Free, Halogen Free/BFR Free and are RoHS Compliant

### Applications

- Smart Phones
- Consumer Electronics
- Embedded Systems
- Smart Batteries
- Desktop and Notebook Computers

**ON Semiconductor®**

**http://onsemi.com**

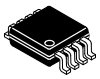

**MSOP−8**
**RM SUFFIX**
**CASE 846AB**

### PIN CONNECTIONS

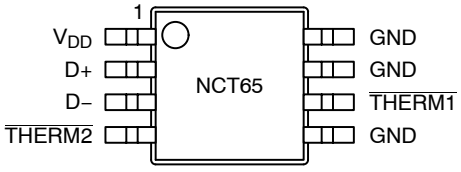


(Top View)

### MARKING DIAGRAM




NCT65 = Specific Device Code
A = Assembly Location
Y = Year
W = Work Week
▪ = Pb-Free Package

(Note: Microdot may be in either location)

### ORDERING INFORMATION

| Device | Package | Shipping† |
|---|---|---|
| NCT65DMR2G | MSOP−8 (Pb-Free) | 3,000/Tape & Reel |

†For information on tape and reel specifications, including part orientation and tape sizes, please refer to our Tape and Reel Packaging Specification Brochure, BRD8011/D.

© Semiconductor Components Industries, LLC, 2012

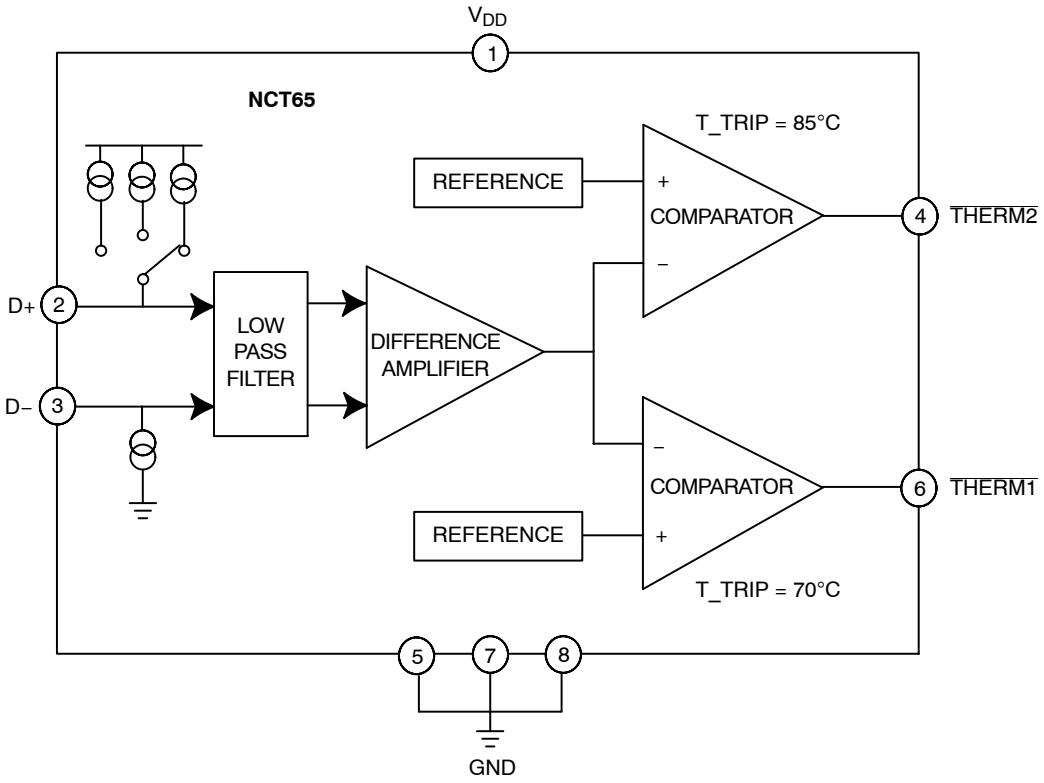


**Figure 1. Functional Block Diagram**

**Table 1. PIN FUNCTION DESCRIPTION**

| Pin No. | Pin Name | Description |
|---|---|---|
| 1 | $V_{DD}$ | Positive Supply Voltage. 2.8 V to 3.6 V. |
| 2 | D+ | Positive Connection for Remote Temperature Sensor. |
| 3 | D– | Negative Connection for Remote Temperature Sensor. |
| 4 | $\overline{\text{THERM2}}$ | Active-low Open-drain Over-temperature Output Pin; Needs a Pull-up Resistor. |
| 5 | GND | Power Supply Ground. |
| 6 | $\overline{\text{THERM1}}$ | Active-low Open-drain Over-temperature Output Pin; Needs a Pull-up Resistor. |
| 7 | GND | Power Supply Ground. |
| 8 | GND | Power Supply Ground. |

**Table 2. ABSOLUTE MAXIMUM RATINGS** (Note 1)

| Parameter | Rating | Unit |
|---|---|---|
| Positive Supply Voltage ($V_{DD}$) to GND | −0.3, +0.3 | V |
| D+ | −0.3 to $V_{DD}$ + 0.3 | V |
| D− to GND | −0.3 to +3.6 | V |
| $\overline{\text{THERM}}$ | −0.3 to +3.6 | V |
| Input Current, $\overline{\text{THERM}}$ | −1, +50 | mA |
| Input Current, D− | ±1 | mA |
| Maximum Junction Temperature | 150 | °C |
| Storage Temperature Range | −65 to 160 | °C |
| ESD Capability, Human Body Model (Note 2) | 1,500 | V |
| ESD Capability, Machine Model (Note 2) | 150 | V |

Stresses exceeding Maximum Ratings may damage the device. Maximum Ratings are stress ratings only. Functional operation above the Recommended Operating Conditions is not implied. Extended exposure to stresses above the Recommended Operating Conditions may affect device reliability.

1. This device series incorporates ESD protection and is tested by the following methods:
   ESD Human Body Model tested per AEC−Q100−002 (EIA/JESD22−A114)
   ESD Machine Model tested per AEC−Q100−003 (EIA/JESD22−A115)
2. Refer to ELECTRICAL CHARACTERISTICS and APPLICATION INFORMATION for Safe Operating Area.

**Table 3. THERMAL CHARACTERISTICS** (Note 3)

| Rating | Symbol | Value | Unit |
|---|---|---|---|
| Thermal Characteristics, MSOP (Note 4)<br>Thermal Resistance, Junction-to-Air | $R_{\theta JA}$ | 142 | °C/W |

3. Refer to ELECTRICAL CHARACTERISTICS and APPLICATION INFORMATION for Safe Operating Area.
4. As measured using a copper heat spreading area of 650 mm² (or 1 in²), of 1 oz copper thickness.

**Table 4. OPERATING RANGES** (Note 5)

| Rating | Symbol | Min | Max | Unit |
|---|---|---|---|---|
| Operating Input Voltage | $V_{IN}$ | 2.8 | 3.6 | V |
| Operating Ambient Temperature Range | $T_A$ | −40 | 125 | °C |

5. Refer to ELECTRICAL CHARACTERISTICS and APPLICATION INFORMATION for Safe Operating Area.

**Table 5. ELECTRICAL CHARACTERISTICS**
($T_A = T_{MIN}$ to $T_{MAX}$, $V_{DD}$ = 2.8 V to 3.6 V. All specifications for −40°C to +125°C, unless otherwise noted.)

| Parameter | Test Conditions | Min | Typ | Max | Unit |
|---|---|---|---|---|---|
| **POWER SUPPLY** | | | | | |
| Supply Voltage $V_{DD}$ | | 2.8 | 3.3 | 3.6 | V |
| Average Operating Supply Current, $I_{DD}$ | | – | – | 1.15 | mA |
| Undervoltage Lockout Threshold | | – | 2.55 | – | V |
| **TRIP POINT ACCURACY** | | | | | |
| Trip Point Accuracy at $V_{DD}$ = 2.8 V to 3.6 V | $T_A$ = 0°C to +70°C<br>$T_A$ = 0°C to +85°C | –<br>– | –<br>– | ±1<br>±1.5 | °C |
| Response Time | Temperature Measurement to $\overline{\text{THERM}}$ Assertion | – | 40 | 52 | ms |
| **OPEN DRAIN OUTPUT ($\overline{\text{THERM}}$)** | | | | | |
| Output Low Voltage, $V_{OL}$ | $I_{OL}$ = −6.0 mA | – | – | 0.4 | V |
| High Output Leakage Current, $I_{OH}$ | $V_{OUT} = V_{DD}$ | – | 0.1 | 1.0 | μA |
| Hysteresis | The temperature must drop by this amount below the $\overline{\text{THERM}}$ trippoints before the pins will de-assert | – | 5 | – | °C |

### Theory of Operation

The NCT65 is a remote trip point temperature sensor for use in a vide variety of applications from smart phones to embedded systems. The remote temperature is measured by the NCT65 and then compared with a fixed limit set by the internal device reference. The limit for the $\overline{\text{THERM1}}$ pin is 70°C and the limit for the $\overline{\text{THERM2}}$ pin is 85°C. If either the remote temperature exceeds the defined limits the open drain $\overline{\text{THERM}}$ pins are asserted low. Each $\overline{\text{THERM}}$ pin self clears when the temperature drops 5°C below the $\overline{\text{THERM}}$ limit. This is to prevent $\overline{\text{THERM}}$ jitter, where the temperature hovers around the $\overline{\text{THERM}}$ limit.

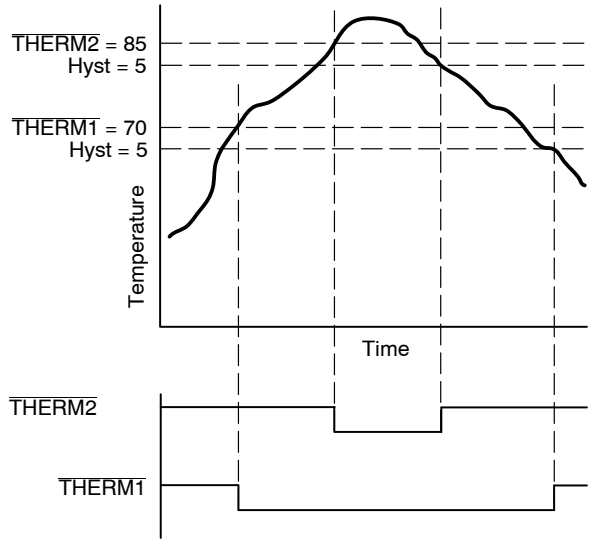


**Figure 2. Trippoints**

### Measurement Method

A simple method of measuring temperature is to exploit the negative temperature coefficient of a diode, or the base-emitter voltage of a transistor, operated at constant current. Unfortunately, this technique requires calibration to null out the effect of the absolute value of $V_{BE}$, which varies from device to device.

The technique used in the NCT65 is to measure the change in $V_{BE}$ when the device is operated at three different currents.

This is given by:

$$\Delta V_{BE} = (n_f)\frac{kT}{q} \times \ln(N) \qquad \text{(eq. 1)}$$

Where:

k is Boltzmann's constant ($1.38 \times 10^{-23}$).

q is the charge on the electron ($1.6 \times 10^{-19}$ Coulombs).

T is the absolute temperature in Kelvins.

N is the ratio of the two currents.

$n_f$ is the ideality factor of the thermal diode.

The NCT65 is trimmed for an ideality factor of 1.008.

To prevent ground noise interfering with the measurement, the more negative terminal of the sensor is not referenced to ground but is biased above ground by an internal diode at the D− input. If the sensor is operating in a noisy environment an optional filter can be added. Its value should be no more than 1,000 pF. See the Layout Considerations section for more information on C1.

To measure $\Delta V_{BE}$, the operating current through the sensor is switched among three related currents.

N1 × I and N2 × I are different multiples of the current, I. The currents through the temperature diode are switched between I and N1 × I, giving $\Delta V_{BE1}$; and then between I and N2 × I, giving $\Delta V_{BE2}$. The temperature is then calculated using the two $\Delta V_{BE}$ measurements. This method also cancels the effect of any series resistance on the temperature measurement. The resulting waveform is passed through a 65 kHz low-pass filter to remove noise, and then to a chopper-stabilized amplifier that performs the functions of amplification and rectification of the waveform to produce a dc voltage proportional to $\Delta V_{BE}$. This voltage is input into two comparators with a reference voltage. If the voltage exceeds the reference voltage then the $\overline{\text{THERM}}$ output asserts low.

## Applications Information

### Noise Filtering

For temperature sensors operating in noisy environments, the industry standard practice was to place a capacitor across the D+ and D− pins to help combat the effects of noise. However, large capacitances affect the accuracy of the temperature measurement, leading to a recommended maximum capacitor value of 1,000 pF. Although this capacitor reduces the noise, it does not eliminate it, making it difficult to use the sensor in a very noisy environment.

The NCT65 has a major advantage over other devices when it comes to eliminating the effects of noise on the external sensor. The series resistance cancellation feature allows a filter to be constructed between the external temperature sensor and the part. The effect of any filter resistance seen in series with the remote sensor is automatically cancelled from the temperature result.

The construction of a filter allows the NCT65 and the remote temperature sensor to operate in noisy environments.

The figure below shows a low-pass R-C-R filter, where R = 100 Ω and C = 1 nF. This filtering reduces both common-mode and differential noise.

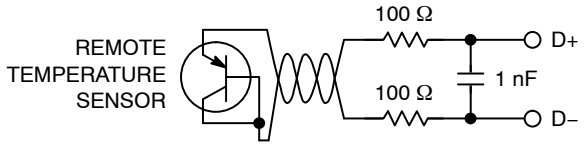


**Figure 3. Filter between Remote Sensor and Factors Affecting Diode Accuracy**

### Remote Sensing Diode

The NCT65 is designed to work with substrate transistors built into processors or with discrete transistors. Substrate transistors are generally PNP types with the collector connected to the substrate. Discrete types are either PNP or NPN transistors connected as diodes (base-shorted to collector). If an NPN transistor is used, the collector and base are connected to D+ and the emitter to D−. If a PNP transistor is used, the collector and base are connected to D− and the emitter to D+.

### Layout Considerations

Digital boards can be electrically noisy environments, and the NCT65 is measuring very small voltages from the remote sensor, so care must be taken to minimize noise induced at the sensor inputs. Take the following precautions:

- Place the NCT65 as close as possible to the remote sensing diode. Provided that the worst noise sources, that is, clock generators, data/address busses etc., are avoided, this distance can be 4 to 8 inches.
- Route the D+ and D− tracks close together, in parallel, with grounded guard tracks on each side. To minimize inductance and reduce noise pickup, a 5 mil track width and spacing is recommended. Provide a ground plane under the tracks, if possible.
- Place a 0.1 μF bypass capacitor close to the $V_{DD}$ pin. In extremely noisy environments, place an input filter capacitor across D+ and D− close to the NCT65. This capacitance can effect the temperature measurement, so ensure that any capacitance seen at D+ and D− is, at maximum, 1,000 pF. This maximum value includes the filter capacitance, plus any cable or stray capacitance between the pins and the sensor diode.




**Figure 4. Typical Arrangement of Signal Tracks**

### Application Circuit

The figure below shows a typical application circuit for the NCT65, using an embedded transistor on a GPU to measure the temperature. The $\overline{\text{THERM1}}$ pin can be used to alert the system and throttle the GPU. The $\overline{\text{THERM2}}$ pin can be used to shutdown the system if necessary. Both pins require pullup resistors to $V_{DD}$ or an alternative supply (up to 3.6 V).

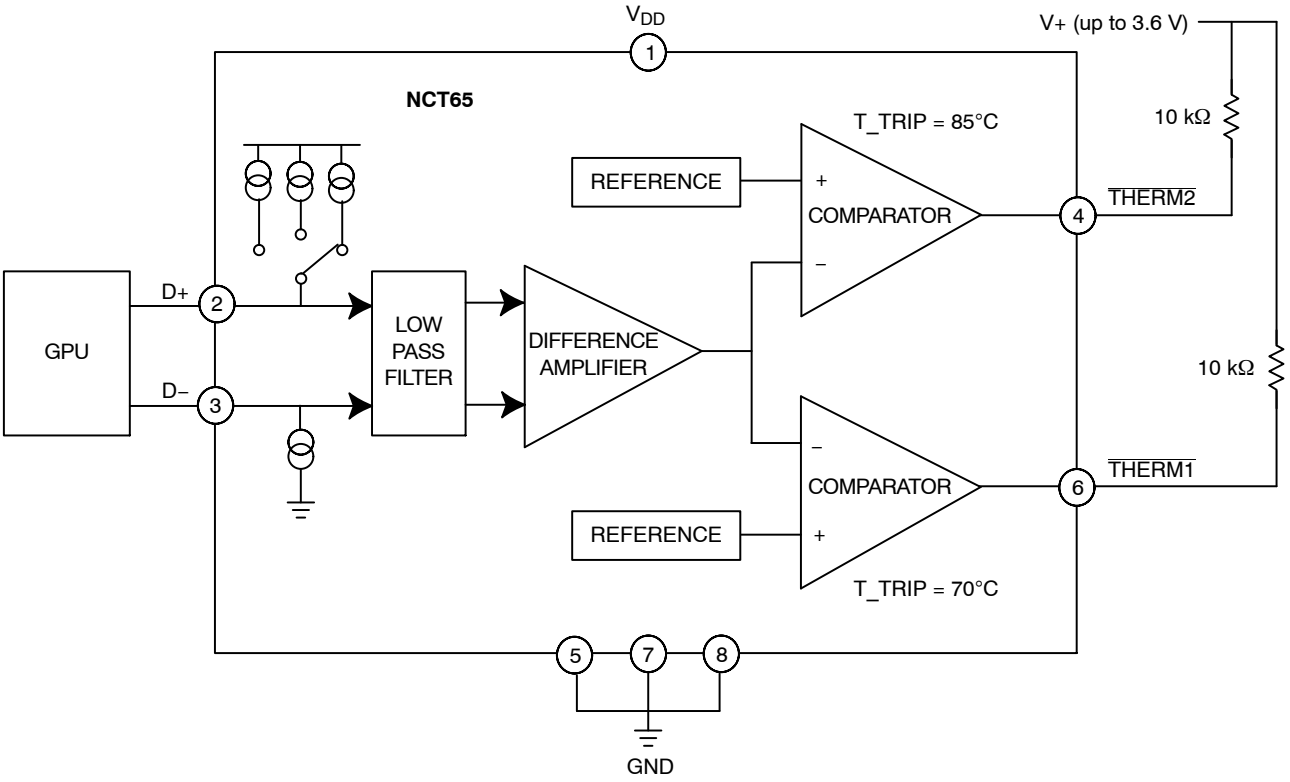


**Figure 5. Typical Configuration Block Diagram**

## PACKAGE DIMENSIONS

**MSOP8**
CASE 846AB−01
ISSUE O

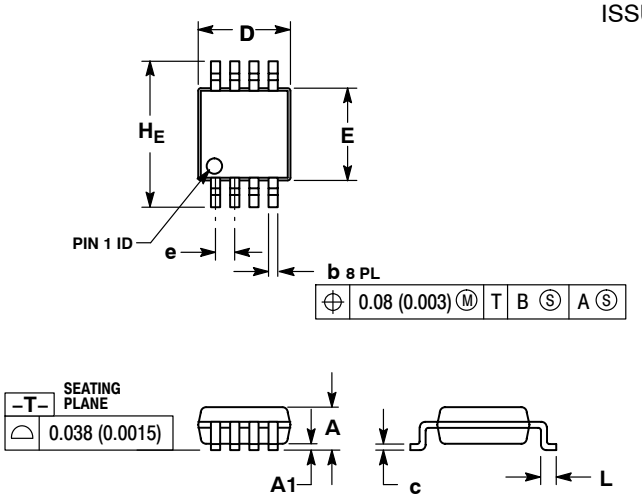


NOTES:
1. DIMENSIONING AND TOLERANCING PER ANSI Y14.5M, 1982.
2. CONTROLLING DIMENSION: MILLIMETER.
3. DIMENSION A DOES NOT INCLUDE MOLD FLASH, PROTRUSIONS OR GATE BURRS. MOLD FLASH, PROTRUSIONS OR GATE BURRS SHALL NOT EXCEED 0.15 (0.006) PER SIDE.
4. DIMENSION B DOES NOT INCLUDE INTERLEAD FLASH OR PROTRUSION. INTERLEAD FLASH OR PROTRUSION SHALL NOT EXCEED 0.25 (0.010) PER SIDE.
5. 846A−01 OBSOLETE, NEW STANDARD 846A−02.

| | MILLIMETERS | | | INCHES | | |
|---|---|---|---|---|---|---|
| DIM | MIN | NOM | MAX | MIN | NOM | MAX |
| A | −− | −− | 1.10 | −− | −− | 0.043 |
| A1 | 0.05 | 0.08 | 0.15 | 0.002 | 0.003 | 0.006 |
| b | 0.25 | 0.33 | 0.40 | 0.010 | 0.013 | 0.016 |
| c | 0.13 | 0.18 | 0.23 | 0.005 | 0.007 | 0.009 |
| D | 2.90 | 3.00 | 3.10 | 0.114 | 0.118 | 0.122 |
| E | 2.90 | 3.00 | 3.10 | 0.114 | 0.118 | 0.122 |
| e | 0.65 BSC | | | 0.026 BSC | | |
| L | 0.40 | 0.55 | 0.70 | 0.016 | 0.021 | 0.028 |
| $H_E$ | 4.75 | 4.90 | 5.05 | 0.187 | 0.193 | 0.199 |

## SOLDERING FOOTPRINT*

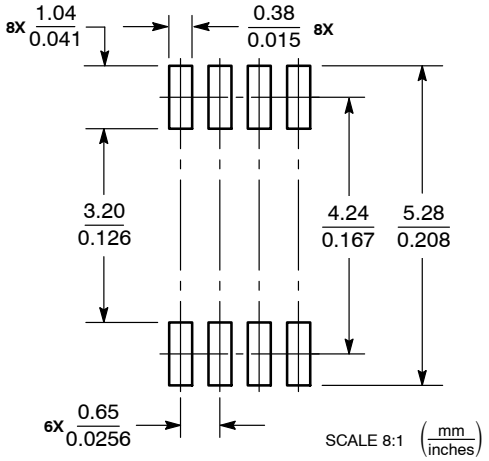


*For additional information on our Pb-Free strategy and soldering details, please download the ON Semiconductor Soldering and Mounting Techniques Reference Manual, SOLDERRM/D.

**ON Semiconductor** and ON are registered trademarks of Semiconductor Components Industries, LLC (SCILLC). SCILLC owns the rights to a number of patents, trademarks, copyrights, trade secrets, and other intellectual property. A listing of SCILLC's product/patent coverage may be accessed at www.onsemi.com/site/pdf/Patent−Marking.pdf. SCILLC reserves the right to make changes without further notice to any products herein. SCILLC makes no warranty, representation or guarantee regarding the suitability of its products for any particular purpose, nor does SCILLC assume any liability arising out of the application or use of any product or circuit, and specifically disclaims any and all liability, including without limitation special, consequential or incidental damages. "Typical" parameters which may be provided in SCILLC data sheets and/or specifications can and do vary in different applications and actual performance may vary over time. All operating parameters, including "Typicals" must be validated for each customer application by customer's technical experts. SCILLC does not convey any license under its patent rights nor the rights of others. SCILLC products are not designed, intended, or authorized for use as components in systems intended for surgical implant into the body, or other applications intended to support or sustain life, or for any other application in which the failure of the SCILLC product could create a situation where personal injury or death may occur. Should Buyer purchase or use SCILLC products for any such unintended or unauthorized application, Buyer shall indemnify and hold SCILLC and its officers, employees, subsidiaries, affiliates, and distributors harmless against all claims, costs, damages, and expenses, and reasonable attorney fees arising out of, directly or indirectly, any claim of personal injury or death associated with such unintended or unauthorized use, even if such claim alleges that SCILLC was negligent regarding the design or manufacture of the part. SCILLC is an Equal Opportunity/Affirmative Action Employer. This literature is subject to all applicable copyright laws and is not for resale in any manner.

**PUBLICATION ORDERING INFORMATION**

**LITERATURE FULFILLMENT**:
Literature Distribution Center for ON Semiconductor
P.O. Box 5163, Denver, Colorado 80217 USA
**Phone**: 303−675−2175 or 800−344−3860 Toll Free USA/Canada
**Fax**: 303−675−2176 or 800−344−3867 Toll Free USA/Canada
**Email**: orderlit@onsemi.com

**N. American Technical Support**: 800−282−9855 Toll Free USA/Canada
**Europe, Middle East and Africa Technical Support:**
Phone: 421 33 790 2910
**Japan Customer Focus Center**
Phone: 81−3−5817−1050

**ON Semiconductor Website**: **www.onsemi.com**

**Order Literature**: http://www.onsemi.com/orderlit

For additional information, please contact your local Sales Representative

**NCT65/D**