NCP5215

Dual Synchronous Buck Controller for Notebook Power System

The NCP5215, a high−efficiency and fast−transient−response dual−channel buck controller, provides a multifunctional power solution for notebook power system. 180° interleaved operation function between the two channels has capabilities of reducing the common input capacitor requirement and improving noise immunity. Adaptive−Voltage−Positioning (AVP) control reduces the requirement of output filter capacitors. Programmable power−saving operation ensures high efficiency over entire load range. Input feedforward voltage−mode control is employed to deal with wide input voltage range. Transient−Response−Enhancement (TRE) control for the both channels enables fast transient response.

Features

- Wide Input Voltage Range: 4.5 V to 24 V
- Adjustable Output Voltage Range: 0.8 V to 3.0 V
- Selectable Nominal Fixed Switching Frequency: 200 kHz, 300 kHz, and 400 kHz
- 180° Interleaved Operation Function between the Two Channels
- Programmable Adaptive−Voltage−Positioning (AVP) Operation
- Programmable Transient−Response−Enhancement (TRE) Control
- Power Saving Operation under Light Load Condition
- Input Feedforward Voltage Mode Control
- Resistive or Inductor's DCR Current Sensing
- 1% Internal 0.8 V Reference
- External Soft−Start Operation
- Output Discharge and Soft−Stop
- Built−in Gate Drivers
- Input Supplies Undervoltage Lockout
- Output Overvoltage and Undervoltage Protections
- Accurate Overcurrent Protection
- Thermal Shutdown Protection
- QFN40 Package
- This is a Pb−Free Device

Typical Applications

- Notebook Computers
- CPU Chipset Power Supplies

ON Semiconductor®

http://onsemi.com

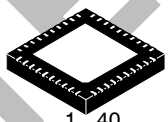

QFN40
MN SUFFIX
CASE 488AR

MARKING DIAGRAM



A = Assembly Location
WL = Wafer Lot
YY = Year
WW = Work Week
G = Pb−Free Package

PIN CONNECTIONS

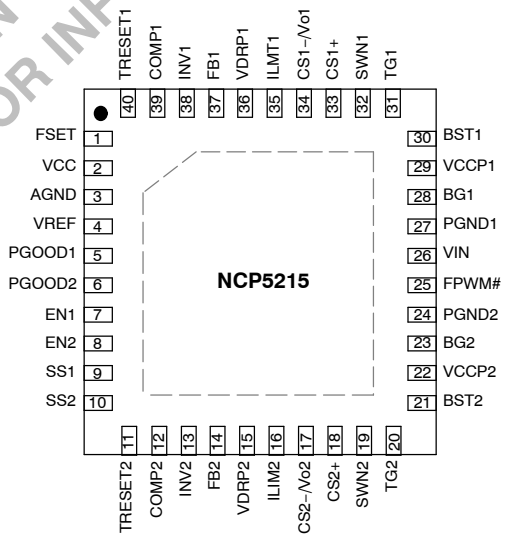

(Top View)

ORDERING INFORMATION

Device	Package	Shipping
NCP5215MNR2G	QFN40 (Pb−Free)	2500/Tape & Reel

†For information on tape and reel specifications, including part orientation and tape sizes, please refer to our Tape and Reel Packaging Specification Brochure, BRD8011/D.

OBSOLETE
THIS DEVICE IS OBSOLETE
PLEASE CONTACT YOUR ON SEMICONDUCTOR
REPRESENTATIVE FOR INFORMATION

© Semiconductor Components Industries, LLC, 2008

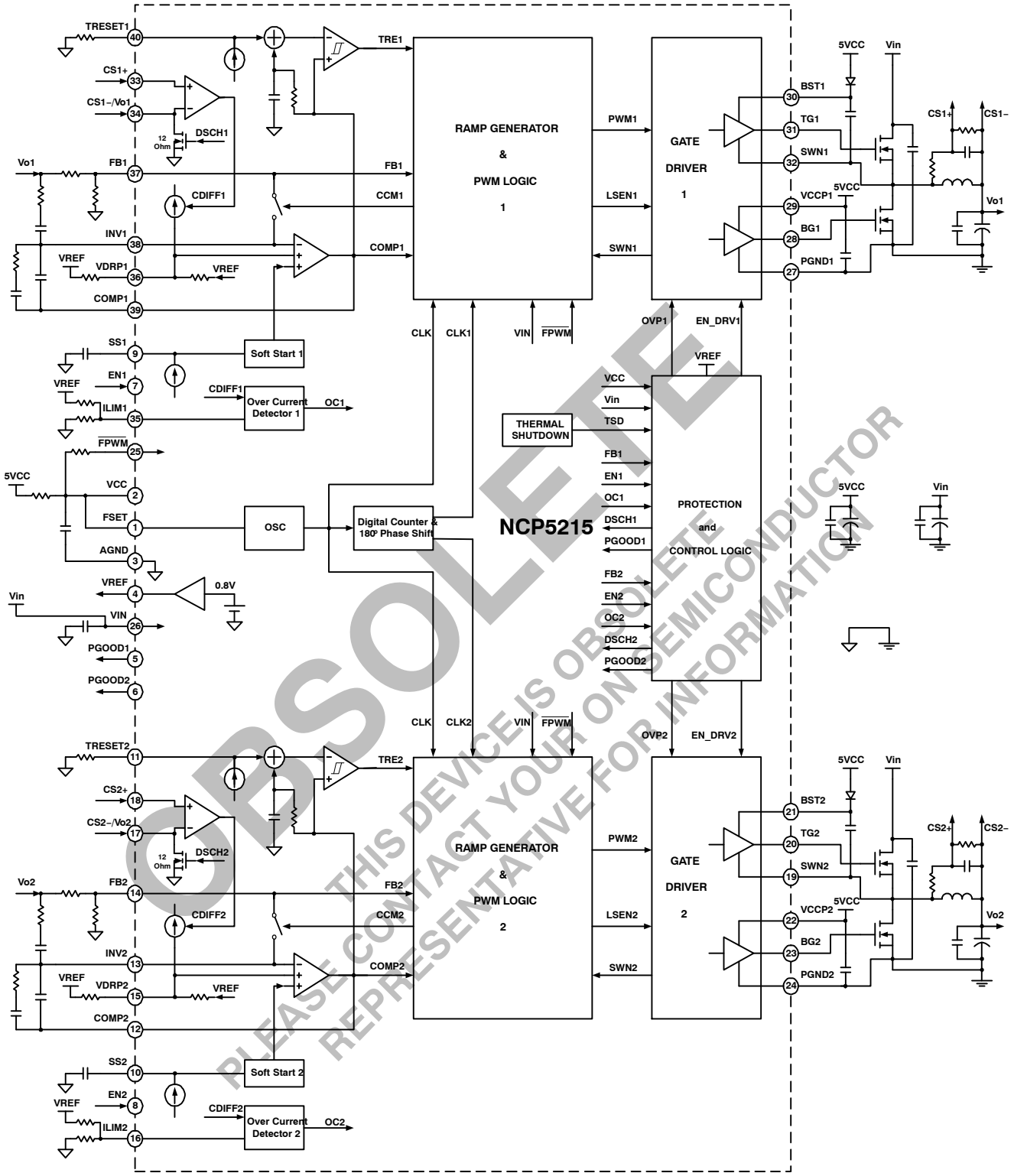

OBSOLETE
THIS DEVICE IS OBSOLETE
PLEASE CONTACT YOUR ON SEMICONDUCTOR
REPRESENTATIVE FOR INFORMATION

Figure 1. Internal Block Diagram and Typical Application

PIN FUNCTION DESCRIPTION

Pin No.	Symbol	Description
1	FSET	**Frequency SET** Programmable pin of switching frequency for two channels.
2	VCC	**VCC** This pin powers the control section of IC.
3	AGND	**Analog Ground** Low noise ground for control section of IC.
4	VREF	**Reference Voltage Output** Internal 0.8 V reference output.
5	PGOOD1	**Power GOOD 1** Power good indicator of the output voltage of Channel 1. (Open drained)
6	PGOOD2	**Power GOOD 2** Power good indicator of the output voltage of Channel 2. (Open drained)
7	EN1	**Enable 1** Enable logic input of Channel 1.
8	EN2	**Enable 2** Enable logic input of Channel 2.
9	SS1	**Soft−Start 1** Soft−starting programmable pin of Channel 1.
10	SS2	**Soft Start 2** Soft−starting programmable pin of Channel 2.
11	TRESET2	**Transient Response Enhancement SET 2** Channel 2 Transient−Response−Enhancement (TRE) programmable pin.
12	COMP2	**COMP2** Output of the error amplifier of Channel 2.
13	INV2	**Inverting Input 2** Error amplifier's inverting input pin of Channel 2.
14	FB2	**Feedback 2** Output voltage feedback of Channel 2.
15	VDRP2	**Voltage Droop 2** Channel 2 voltage droop output to the compensation. This pin is used to program the adaptive−voltage−position (AVP) function for Channel 2.
16	ILMT2	**Current Limit 2** Current limit programmable pin of Channel 2.
17	CS2− / Vo2	**Current Sense 2−** Channel 2 inductor current differential sense inverting input.
18	CS2+	**Current Sense 2+** Channel 2 inductor current differential sense non−inverting input.
19	SWN2	**Switch Node 2** Switch node between the top MOSFET and bottom MOSFET of Channel 2.
20	TG2	**Top Gate 2** Gate driver output of the top N−Channel MOSFET for Channel 2.
21	BST2	**BOOTSTRAP Connection 2** Channel 2 top gate driver input supply, a bootstrap capacitor connection between SWN2 and this pin.
22	VCCP2	**VCC Power 2** This pin powers the bottom gate driver of Channel 2.
23	BG2	**Bottom Gate 2** Gate driver output of the bottom N−Channel MOSFET for Channel 2.
24	PGND2	**Power Ground 2** Ground reference and high−current return path for the bottom gate driver of Channel 2.
25	FPWM#	**Forced PWM** Forced PWM enable logic input. Low to enable forced PWM mode and disable power−saving mode for both channels.
26	Vin	**Vin** Input voltage monitor input.
27	PGND1	**Power Ground 1** Ground reference and high−current return path for the bottom gate driver of Channel 1.
28	BG1	**Bottom Gate 1** Gate driver output of the bottom N−Channel MOSFET for Channel 1.
29	VCCP1	**VCC Power 1** This pin powers the bottom gate driver of Channel 1.
30	BST1	**BOOTSTRAP Connection 1** Channel 1 top gate driver input supply, a bootstrap capacitor connection between SWN1 and this pin.
31	TG1	**Top Gate 1** Gate driver output of the top N−Channel MOSFET for Channel 1.
32	SWN1	**Switch Node 1** Switch node between the top MOSFET and bottom MOSFET of Channel 1.
33	CS1+	**Current Sense 1+** Channel 1 inductor current differential sense non−inverting input.
34	CS1− / Vo1	**Current Sense 1−** Channel 1 inductor current differential sense inverting input.
35	ILMT1	**Current Limit 1** Current limit programmable pin of Channel 1.
36	VDRP1	**Voltage Droop 1** Channel 1 voltage droop output to the compensation. This pin is used to program the Adaptive−Voltage−Position (AVP) function for Channel 1.
37	FB1	**Feedback 1** Output voltage feedback of Channel 1.
38	INV1	**Inverting Input 1** Error amplifier's inverting input pin of Channel 1.
39	COMP1	**COMP1** Output of the error amplifier of Channel 1.
40	TRESET1	**Transient Response Enhancement SET 1** Channel 1 Transient−Response−Enhancement (TRE) program pin.

OBSOLETE
PLEASE CONTACT YOUR ON SEMICONDUCTOR REPRESENTATIVE FOR INFORMATION
THIS DEVICE IS OBSOLETE

MAXIMUM RATINGS

Rating	Symbol	Value	Unit
Power Supply Voltages to AGND	V_{CC}, V_{CCP1}, V_{CCP2}	−0.3, 6.0	V
High−Side Gate Driver Supplies: BST1 to SWN1, BST2 to SWN2 High−Side FET Gate Driver Voltages: TG1 to SWN1, TG2 to SWN2	$V_{BST1} - V_{SWN1}$, $V_{BST2} - V_{SWN2}$, $V_{TG1} - V_{SWN1}$, $V_{TG2} - V_{SWN2}$,	−0.3, 6.0	V
Input Voltage Sense Inputs to AGND	V_{in}	−0.3, 27	V
Switch Nodes	V_{SWN1}, V_{SWN2}	−4.0 (<100 ns), −0.3 (dc), 32	V
PGND1, PGND2 to AGND	V_{GND}	−0.3, 0.3	V
Thermal Characteristics Thermal Resistance, Junction−to−Air (Pad soldered to PCB)	$R_{\theta JA}$	36	°C/W
Operating Junction Temperature Range	T_J	−40 to +150	°C
Operating Ambient Temperature Range	T_A	−40 to +85	°C
Storage Temperature Range	T_{stg}	−55 to +150	°C
Moisture Sensitivity Level	MSL	1	−

Stresses exceeding Maximum Ratings may damage the device. Maximum Ratings are stress ratings only. Functional operation above the Recommended Operating Conditions is not implied. Extended exposure to stresses above the Recommended Operating Conditions may affect device reliability.

1. This device contains ESD protection and exceeds the following tests:
   Human Body Model (HBM) ≤2.0kV per JEDEC standard: JESD22−A114.
   Machine Model (MM) =≤200V per JEDEC standard: JESD22−A115, except Pin 17 and Pin 34, which are ≤150V.
2. Latchup Current Maximum Rating: ≤150mA per JEDEC standard: JESD78.

OBSOLETE
THIS DEVICE IS OBSOLETE
PLEASE CONTACT YOUR ON SEMICONDUCTOR
REPRESENTATIVE FOR INFORMATION

ELECTRICAL CHARACTERISTICS (V_{CC} = 5.0 V, V_{IN} = 12 V, F_{SET} = 5.0 V, Fsw = 300 kHz, T_A = −40°C to 85°C, unless otherwise noted.)

Characteristic	Symbol	Test Conditions	Min	Typ	Max	Unit
SUPPLY VOLTAGE						
Input Voltage	Vin	–	4.5	–	24	V
V_{CC} Operating Voltage	V_{CC}	–	4.5	5.0	5.5	V
V_{CCP1} Operating Voltage	V_{CCP1}	–	4.5	5.0	5.5	V
V_{CCP2} Operating Voltage	V_{CCP2}	–	4.5	5.0	5.5	V
SUPPLY CURRENT						
V_{CC} Quiescent Supply Current in Normal Operation	I_{VCC_N}	VEN1 = VEN2 = 5.0 V, VFPWM# = 0 V TG1, BG1, TG2, and BG2 are open	–	3.0	6.0	mA
V_{CC} Quiescent Supply Current in Power−Saving Operation	I_{VCC_PS}	VEN1 = VEN2 = 5.0 V, VFPWM# = 5.0 V TG1, BG1, TG2, and BG2 are open	–	3.0	6.0	mA
V_{CC} Shutdown Current	I_{VCC_SD}	VEN1 = VEN2 = 0 V	–	–	10	μA
V_{CCP} Quiescent Supply Current in Normal Operation	I_{VCCP1_N}, I_{VCCP2_N}	VEN1 = VEN2 = 5.0 V, VFPWM# = 0 V TG1, BG1, TG2, and BG2 are open	–	1.2	2.0	mA
V_{CCP} Shutdown Current	I_{VCCP1_SD}, I_{VCCP2_SD}	VEN1 = VEN2 = 0 V	–	–	10	μA
BST Quiescent Supply Current in Normal Operation	I_{BST1_N}, I_{BST2_N}	VEN1 = VEN2 = 5.0 V, VFPWM# = 0 V TG1, BG1, TG2, and BG2 are open	–	1.0	2.0	mA
BST Shutdown Current	I_{BST1_SD}, I_{BST2_SD}	VEN1 = VEN2 = 0 V	–	–	5.0	μA
VOLTAGE−MONITOR						
V_{CC} Start Threshold	VCC_{UV+}	V_{CC} and V_{CCP} are connected to the same voltage source	4.05	4.25	4.48	V
V_{CC} UVLO Hysteresis	VCC_{hys}	–	200	275	400	mV
Power Good Higher Threshold	VPGH	With Respect to Error Comparator Threshold of 0.8 V	–	112	–	%
Power Good Lower Threshold	VPGL	With Respect to Error Comparator Threshold of 0.8 V	–	88	–	%
Output Overvoltage Trip Threshold	FBOVPth	With respect to Error Comparator Threshold of 0.8 V	113	117	121	%
Overvoltage Fault Propagation Delay	–	FB forced 2% above trip threshold	–	1.5	–	μs
Output Undervoltage Trip Threshold	FBUVPth	With respect to Error Comparator Threshold of 0.8 V	63	68	73	%
Output Undervoltage Protection Blanking Time	$UVPT_{blk}$	(Note 3)	–	16/fsw	–	s
VREF OUTPUT						
Reference Voltage	V_{ref}	T_A = 25°C T_A = −40 to 85°C	0.796 0.792	0.8 –	0.804 0.808	V
Reference Load Regulation	ΔV_{ref}	Ivref = 0 to 100 μA	–	–	4.0	mV
Sinking Current	Isink_VREF	Vref rises 10%	20	–	–	μA
CURRENT LIMIT						
Current Limit Threshold	$V_{((CS+)-(CS-))}$	V_{ILIM} = 0.4 V	72	80	88	mV
ILIM Setting Range	$Range_{ILIM}$	(Note 3)	–	–	0.8	V

3. Guaranteed by design, not tested in production.

OBSOLETE
THIS DEVICE IS OBSOLETE
PLEASE CONTACT YOUR ON SEMICONDUCTOR
REPRESENTATIVE FOR INFORMATION

ELECTRICAL CHARACTERISTICS (continued) (V_{CC} = 5.0 V, V_{IN} = 12 V, F_{SET} = 5.0 V, Fsw = 300 kHz, T_A = −40°C to 85°C, unless otherwise noted)

Characteristic	Symbol	Test Conditions	Min	Typ	Max	Unit
THERMAL SHUTDOWN						
Thermal Shutdown	Tsd	(Note 4)	–	150	–	°C
Thermal Shutdown Hysteresis	Tsdhys	(Note 4)	–	30	–	°C
OSCILLATOR						
Operation Frequency	Fsw	FSET pin open loop (T_A = 25°C)	160	200	240	kHz
		Pull high FSET pin (T_A = 25°C) (T_A = −40°C to 85°C)	262.5 255	300 –	337.5 345	kHz
		Pull low FSET pin (T_A = 25°C)	340	400	460	kHz
SOFT−START						
Soft−Start Source Current	I_{SS}	–	3.0	4.0	5.0	μA
Soft−Start Complete Threshold	V_{SSTh}	(Note 4)	–	0.9	–	V
SWITCHING REGULATORS						
Main Ramp Amplitude Voltage	Vramp	V_{IN} = 5.0 V (Note 4)	–	1.25	–	V
Maximum Duty Cycle	Dmax	V_{IN} = 5.0 V	–	92	–	%
		V_{IN} = 12 V	–	48	–	%
		V_{IN} = 24 V	–	27	–	%
GATE DRIVERS						
TG Gate Pull−HIGH Resistance	R_{H_TG1}, R_{H_TG2}	$V_{BST}−V_{SWN}$ = 5.0 V, $V_{TG}−V_{SWN}$ = 4.0 V	–	1.5	4.0	Ω
TG Gate Pull−LOW Resistance	R_{L_TG1}, R_{L_TG2}	$V_{BST}−V_{SWN}$ = 5.0 V, $V_{TG}−V_{SWN}$ = 1.0 V	–	1.5	4.0	Ω
BG Gate Pull−HIGH Resistance	R_{H_BG1}, R_{H_BG2}	V_{CCP} = 5.0 V, V_{BG} = 4.0 V	–	1.5	4.0	Ω
BG Gate Pull−LOW Resistance	R_{L_BG1}, R_{L_BG2}	V_{CCP} = 5.0 V, V_{BG} = 1.0 V	–	0.5	1.5	Ω
Dead Time	T_{LH}	BG Falling to TG Rising	–	42	–	ns
	T_{HL}	TG Falling to BG Rising	–	34	–	
DIFFERENTIAL CURRENT ERROR AMPLIFIER						
Input Bias Current	CS−IIB	–	−200	–	200	nA
CS+ to CS− Input Signal Range	VCS_MAX	Refer to AGND	–	–	3.0	V
Output Voltage Swing	VOS_DRP	(Note 4)	0.6	–	1.0	V
Offset Current at VDRP	Ioffset_DRP	(CS+)−(CS−) = 0 V, no connection from VDRP pin to VREF	−1.0	–	1.0	μA
[(CS+)−(CS−)] to VDRP Gain	Gain_CS ((V_VDRP−Vref)/ ((CS+)−(CS−)))	(CS+)−(CS−) = 20 mV	2.35	2.6	2.85	V/V
Internal Droop Resistance	R_{DRP}	From V_{DRP} to V_{REF}	2.4	2.65	2.9	kΩ

4. Guaranteed by design, not tested in production.

OBSOLETE
THIS DEVICE IS OBSOLETE
PLEASE CONTACT YOUR ON SEMICONDUCTOR
REPRESENTATIVE FOR INFORMATION

ELECTRICAL CHARACTERISTICS (continued) (V_{CC} = 5.0 V, V_{IN} = 12 V, F_{SET} = 5.0 V, Fsw = 300 kHz, T_A = −40°C to 85°C, unless otherwise noted)

Characteristic	Symbol	Test Conditions	Min	Typ	Max	Unit
VOLTAGE ERROR AMPLIFIER						
DC Gain	GAIN_VEA	(Note 5)	–	80	–	dB
Unity Gain Bandwidth	Ft_VEA	(Note 5)	–	13	–	MHz
Slew Rate	SR_VEA	(Note 5) (COMP PIN TO GND = 100 pF)	–	1.0	–	V/μs
Inverting Input Current	I_{INV1}, I_{INV2}	V_{INV} = 0.8 V	–	–	0.5	μA
Output Voltage Swing	VOS_EA	–	1.0	–	3.0	V
Source Current	Isource_EA	COMP = 3.0 V	2.0	4.0	–	mA
Sink Current	Isink_EA	COMP = 1.0 V	1.5	2.0	–	mA
CONTROL SECTION						
VEN1, VEN2 Threshold High	V_{EN1_H}, V_{EN2_H}	–	1.4	–	–	V
VEN1, VEN2 Threshold Low	V_{EN1_L}, V_{EN2_L}	–	–	–	0.5	V
VEN1, VEN2 Source Current	I_{EN1_SOURCE}, I_{EN2_SOURCE}	–	–	–	0.5	μA
VEN1, VEN2 Sink Current	I_{EN1_SINK}, I_{EN2_SINK}	–	–	–	0.5	μA
VFPWM# Threshold High	V_{FPWM_H}	–	1.4	–	–	V
VFPWM# Threshold Low	V_{FPWM_L}	–	–	–	0.5	V
VFPWM# Source Current	I_{FPWM_SOURCE}	–	–	–	0.5	μA
VFPWM# Sink Current	I_{FPWM_SINK}	–	–	–	0.5	μA
PGOOD Pin ON Resistance	PGOOD_R	I_PGOOD = 5.0 mA	–	25	–	Ω
PGOOD Pin OFF Current	PGOOD_LK	–	–	–	1.0	μA
OUTPUT DISCHARGE MODE						
Output Discharge On−Resistance	$R_{discharge}$	–	–	12	–	Ω
System Restart Threshold of the Output Voltage	Vth_SRST	–	0.2	0.3	0.4	V
TRE OFFSET						
TRESET Offset Current	I_{TRE}	–	3.0	4.0	5.0	μA

5. Guaranteed by design, not tested in production.

OBSOLETE
THIS DEVICE IS OBSOLETE
PLEASE CONTACT YOUR ON SEMICONDUCTOR
REPRESENTATIVE FOR INFORMATION

TYPICAL OPERATING CHARACTERISTICS

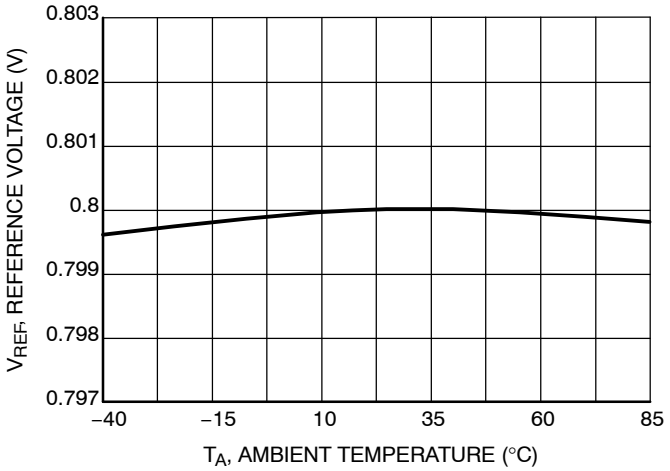

Figure 2. Reference Voltage vs. Ambient Temperature

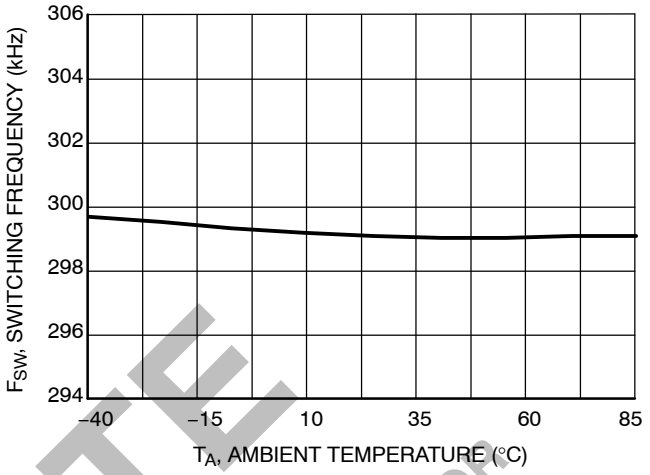

Figure 3. Switching Frequency vs. Ambient Temperature

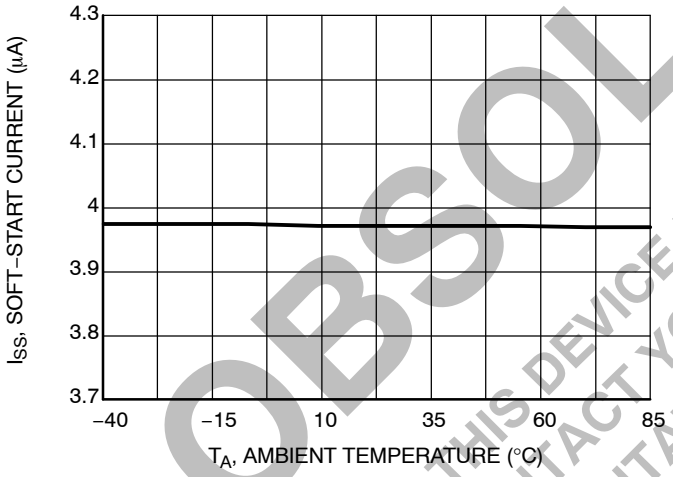

Figure 4. Soft−Start Current vs. Ambient Temperature

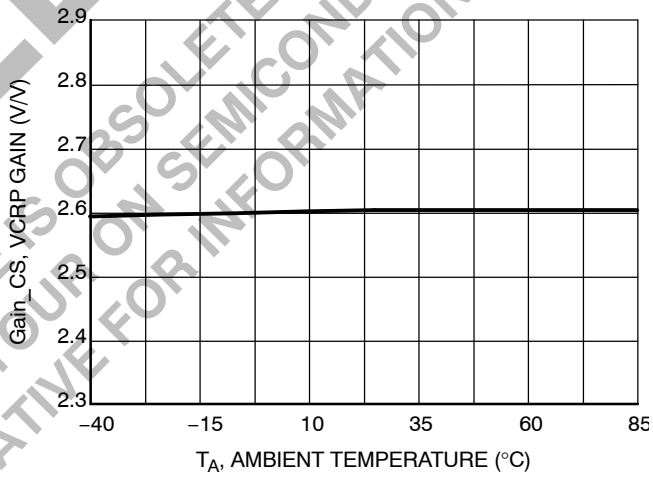

Figure 5. V_{DRP} Gain vs. Ambient Temperature

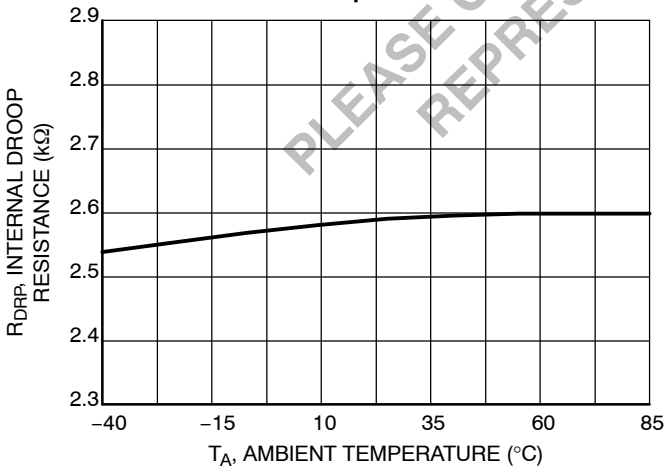

Figure 6. Internal Droop Resistance vs. Ambient Temperature

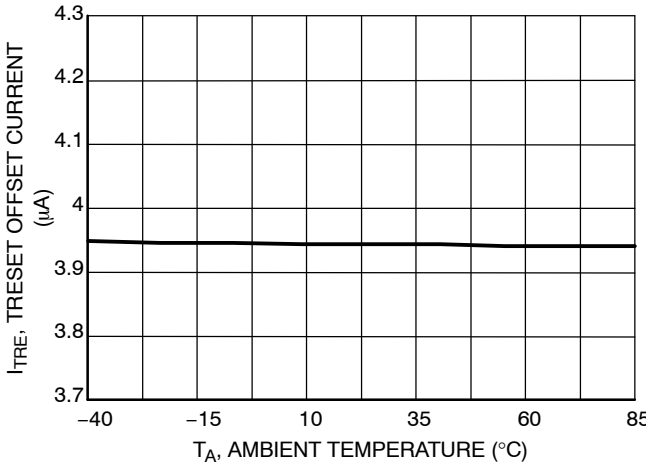

Figure 7. TRESET Offset Current vs. Ambient Temperature

OBSOLETE
THIS DEVICE IS OBSOLETE
PLEASE CONTACT YOUR ON SEMICONDUCTOR
REPRESENTATIVE FOR INFORMATION

TYPICAL OPERATING CHARACTERISTICS

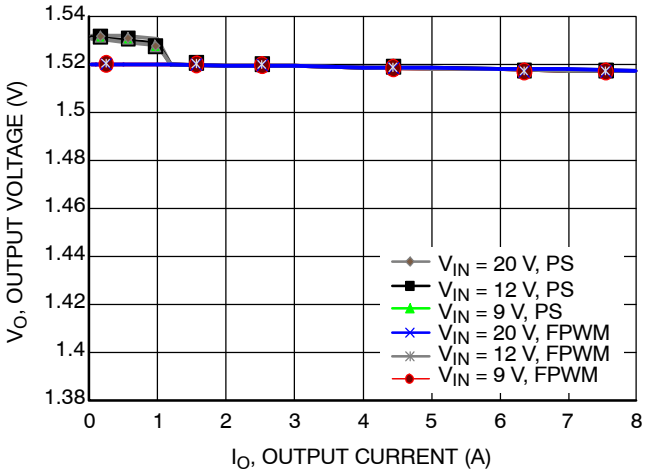

Figure 8. Output Voltage vs. Output Current (V_O = 1.5 V, without AVP Function)

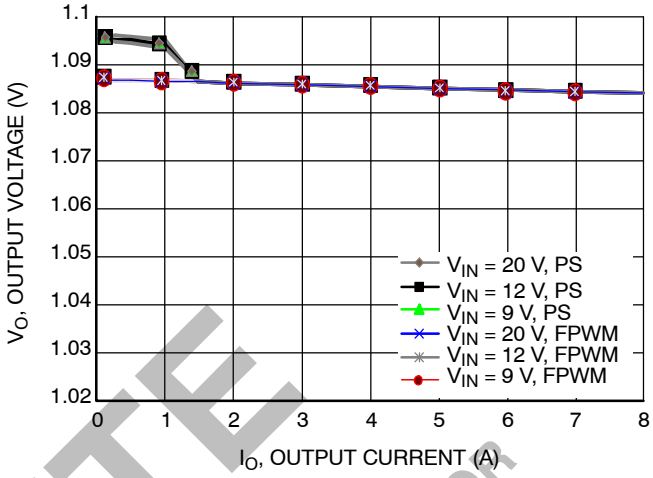

Figure 9. Output Voltage vs. Output Current (Vo = 1.05 V, Without AVP Function)

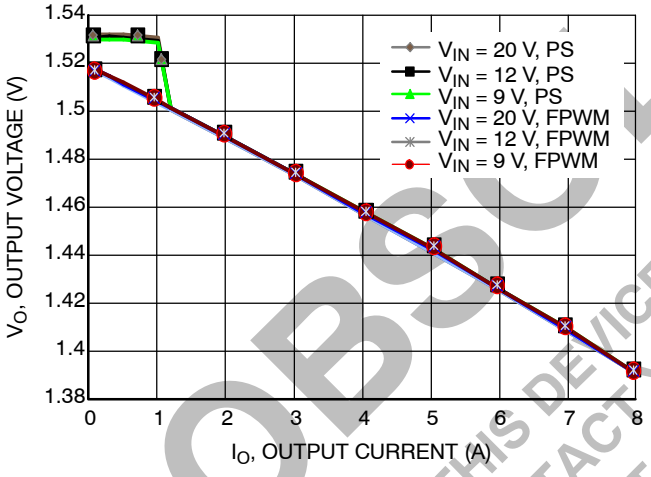

Figure 10. Output Voltage vs. Output Current (V_O = 1.5 V, with AVP Function)

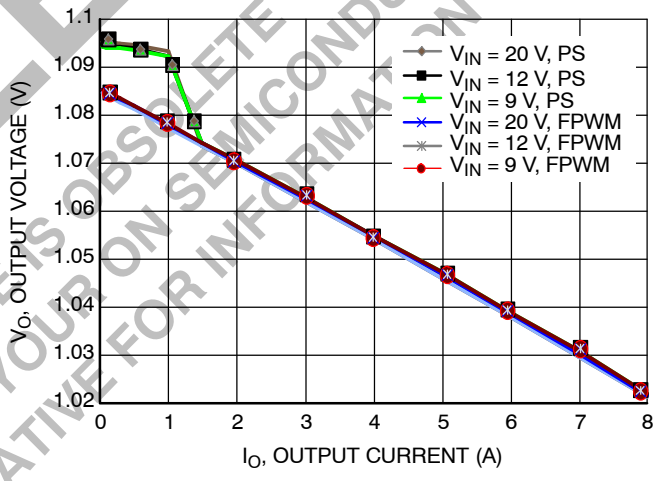

Figure 11. Output Voltage vs. Output Current (V_O = 1.05 V, with AVP Function)

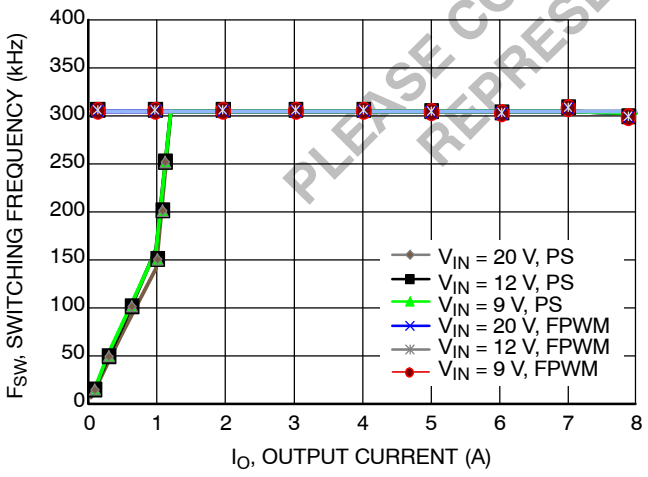

Figure 12. Switching Frequency vs. Output Current (V_O = 1.5 V)

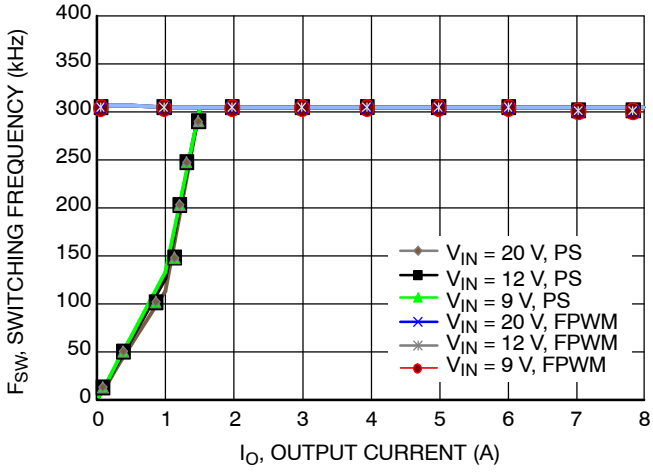

Figure 13. Switching Frequency vs. Output Current (V_O = 1.05 V)

OBSOLETE
THIS DEVICE IS OBSOLETE
PLEASE CONTACT YOUR ON SEMICONDUCTOR
REPRESENTATIVE FOR INFORMATION

TYPICAL OPERATING CHARACTERISTICS

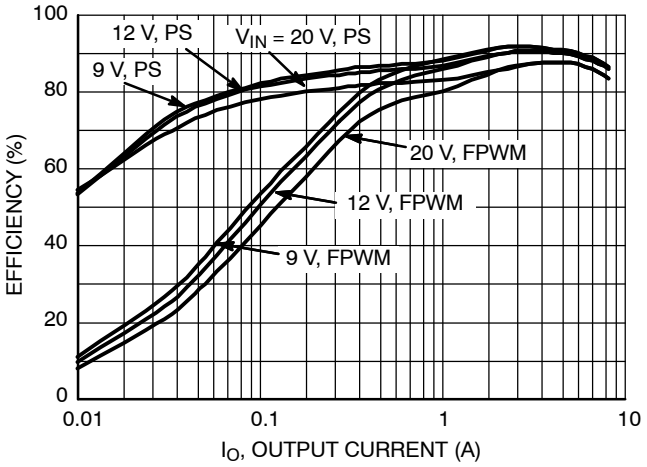

Figure 14. Efficiency vs. Output Current (V_O = 1.5 V)

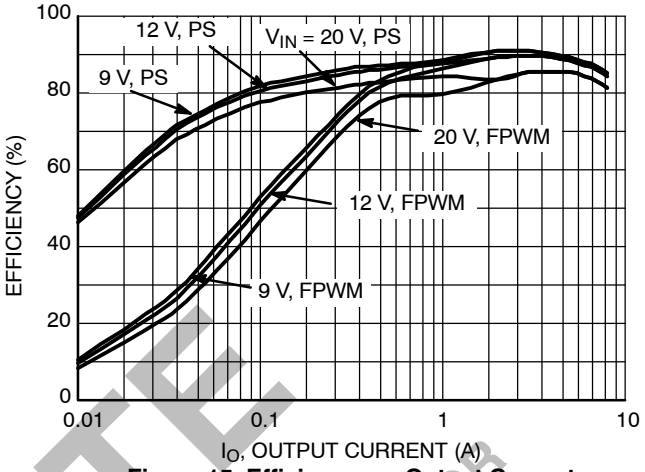

Figure 15. Efficiency vs. Output Current (V_O = 1.05 V)

OBSOLETE
THIS DEVICE IS OBSOLETE
PLEASE CONTACT YOUR ON SEMICONDUCTOR
REPRESENTATIVE FOR INFORMATION

TYPICAL OPERATING CHARACTERISTICS

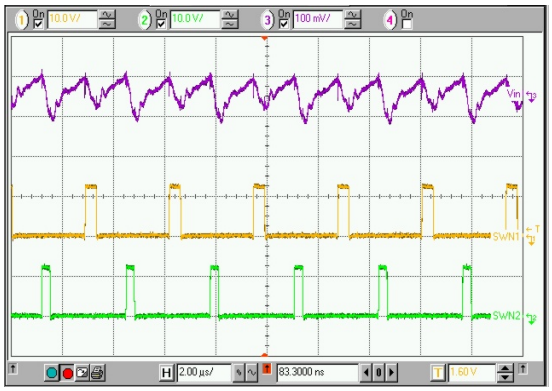

Top: Vin, Input Voltage Ripple, (100mV/div)
Middle: SWN1, CH1 Switching Node Voltage, (10V/div)
Bottom: SWN2, CH2 Switching Node Voltage, (10V/div)
Time: 2μs/div

Figure 16. Input Voltage Ripple with Interleaved Operation (V_O1 = 1.5 V, I_O1 = 4 A, V_O2 = 1.05 V, I_O2 = 6 A)

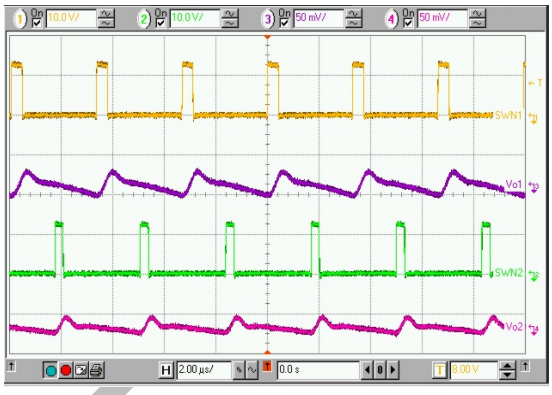

Top: SWN1, CH1 Switching Node Voltage, (10V/div)
Middle 1: Vo1, CH1 Output Voltage Ripple, (50mV/div)
Middle 2: SWN2, CH2 Switching Node Voltage, (10V/div)
Bottom: Vo2, CH2 Output Voltage Ripple, (50mV/div)
Time: 2μs/div

Figure 17. Output Voltage Ripple with Interleaved Operation (V_O1 = 1.5 V, I_O1 = 4 A, V_O2 = 1.05 V, I_O2 = 6 A)



Top: EN1, CH1 Enable Signal, (5V/div)
Middle 1: PGOOD1, CH1 Power Good Signal, (5V/div)
Middle 2: SWN1, CH1 Switching Node Voltage, (10V/div)
Bottom: V_O1, CH1 Output Voltage, (1V/div)
Time: 200μs/div

Figure 18. Powerup Operation (V_O1 = 1.5 V, I_O1 = 4 A)



Top: EN2, CH2 Enable Signal, (5V/div)
Middle 1: PGOOD2, CH2 Power Good Signal, (5V/div)
Middle 2: SWN2, CH2 Switching Node Voltage, (10V/div)
Bottom: V_O2, CH2 Output Voltage, (1V/div)
Time: 200μs/div

Figure 19. Powerup Operation (V_O2 = 1.05 V, I_O2 = 6 A)

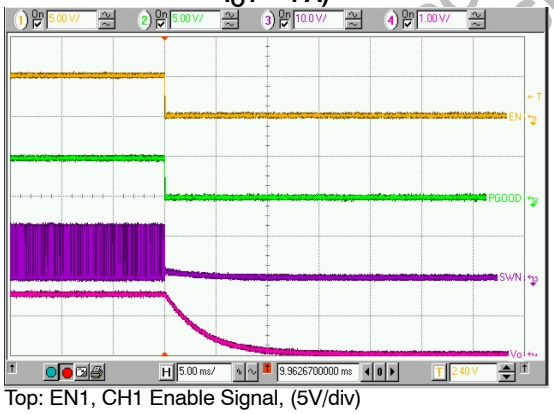

Top: EN1, CH1 Enable Signal, (5V/div)
Middle 1: PGOOD1, CH1 Power Good Signal, (5V/div)
Middle 2: SWN1, CH1 Switching Node Voltage, (10V/div)
Bottom: V_O1, CH1 Output Voltage, (1V/div)
Time: 5ms/div

Figure 20. Powerdown Operation (V_O1 = 1.5 V, I_O1 = 0 A, FPWM)

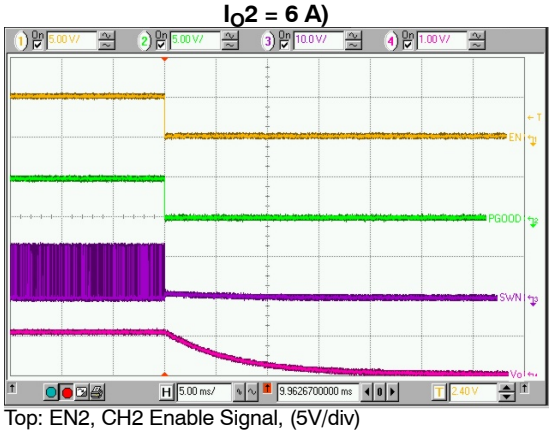

Top: EN2, CH2 Enable Signal, (5V/div)
Middle 1: PGOOD2, CH2 Power Good Signal, (5V/div)
Middle 2: SWN2, CH2 Switching Node Voltage, (10V/div)
Bottom: Vo2, CH2 Output Voltage, (1V/div)
Time: 5ms/div

Figure 21. Powerdown Operation (V_O2 = 1.05 V, I_O2 = 0 A, FPWM)

OBSOLETE
THIS DEVICE IS O
CONTACT YOUR
SENTATIVE

TYPICAL OPERATING CHARACTERISTICS

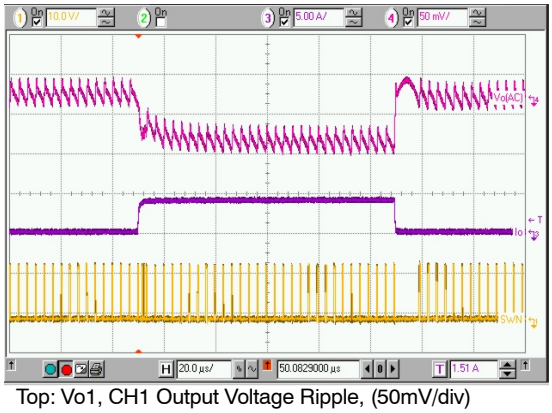

Top: Vo1, CH1 Output Voltage Ripple, (50mV/div)
Middle: Io1, CH1 Output Current, (5A/div)
Bottom: SWN1, CH1 Switching Node Voltage, (10V/div)
Time: 20μs/div

Figure 22. Load Transient Response with FPWM Operation (V_O1 = 1.5 V, I_O1 = 0 A–4 A–0 A)



Top: Vo2, CH2 Output Voltage Ripple, (50mV/div)
Middle: Io2, CH2 Output Current, (5A/div)
Bottom: SWN2, CH2 Switching Node Voltage, (10V/div)
Time: 20μs/div

Figure 23. Load Transient Response with FPWM Operation (V_O2 = 1.05 V, I_O2 = 0 A–6 A–0 A)

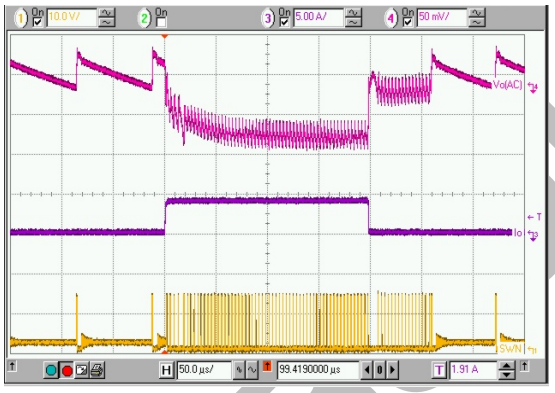

Top: Vo1, CH1 Output Voltage Ripple, (50mV/div)
Middle: Io1, CH1 Output Current, (5A/div)
Bottom: SWN1, CH1 Switching Node Voltage, (10V/div)
Time: 50μs/div

Figure 24. Load Transient Response with Skip–Mode Operation (V_O1 = 1.5 V, I_O1 = 0.1 A–4 A–0.1 A)

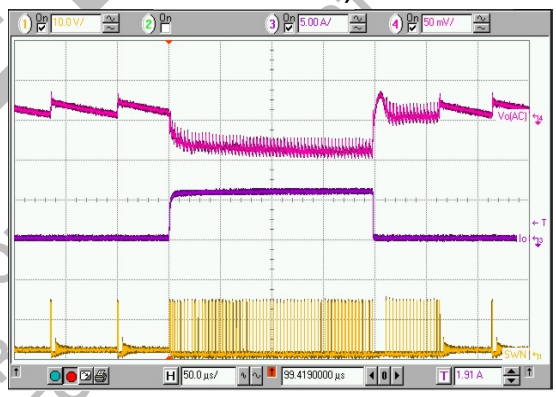

Top: Vo2, CH2 Output Voltage Ripple, (50mV/div)
Middle: Io2, CH2 Output Current, (5A/div)
Bottom: SWN2, CH2 Switching Node Voltage, (10V/div)
Time: 50μs/div

Figure 25. Load Transient Response with Skip–Mode Operation (V_O2 = 1.05 V, I_O2 = 0.1 A–6 A–0.1 A)

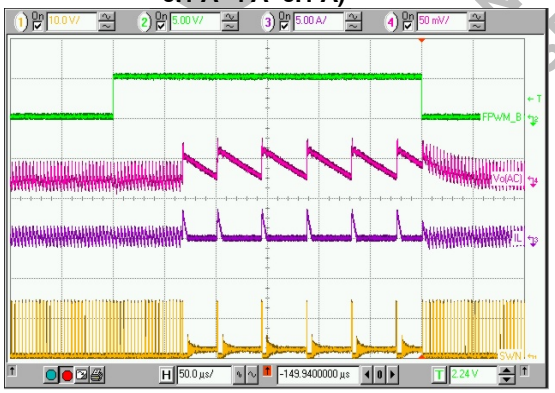

Top: FPWM#, FPWM# Signal, (5V/div)
Middle 1: Vo1, CH1 Output Voltage Ripple, (50mV/div)
Middle 2: iL1, CH1 Inductor Current, (5A/div)
Bottom: SWN1, CH1 Switching Node Voltage, (10V/div)
Time: 50μs/div

Figure 26. On–Line Mode–Changing Operation (V_O1 = 1.5 V, I_O1 = 0.2 A, FPWM–Skip Mode–FPWM)

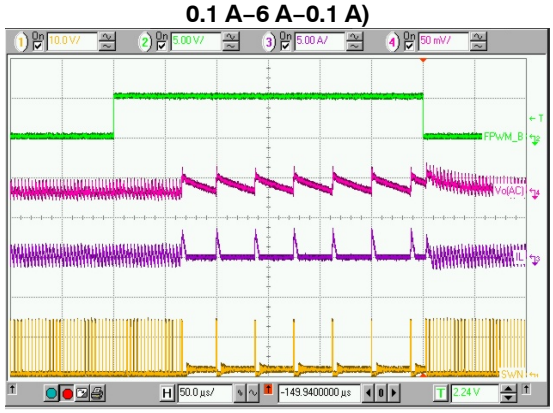

Top: FPWM#, FPWM# Signal, (5V/div)
Middle 1: Vo2, CH2 Output Voltage Ripple, (50mV/div)
Middle 2: iL2, CH2 Inductor Current, (5A/div)
Bottom: SWN2, CH2 Switching Node Voltage, (10V/div)
Time: 50μs/div

Figure 27. On–Line Mode–Changing Operation (V_O2 = 1.05 V, I_O2 = 0.2 A, FPWM–Skip Mode–FPWM)

OBSOLETE
THIS DEVICE IS O
NTACT YOUR
SENTATIVE

OPERATION DESCRIPTION

General

The NCP5215, a high−efficiency and fast−transient−response dual−channel buck controller, provides a multifunctional power solution for notebook power system. 180° interleaved operation function between the two channels has capabilities of reducing the common input capacitor requirement and improving noise immunity. Adaptive−Voltage−Positioning (AVP) control reduces the requirement of output filter capacitors. Programmable power−saving operation ensures high efficiency over entire load range. Input feedforward voltage−mode control is employed to deal with wide input voltage range. Transient−Response−Enhancement (TRE) control for the both channels enables fast transient response.

PWM Operation

The NCP5215 operates at a pin−selectable normal operation switching frequency, allowing 200 kHz, 300 kHz, or 400 kHz. As shown in Table 1, the connection of the pin FSET determines normal operation frequency in continuous−conduction−mode (CCM).

Table 1. SWITCHING FREQUENCY SELECTION

FSET Pin	Float	VCC	GND
Fsw (kHz)	200	300	400

To speed up transient response and increase sampling rate, an internal high−frequency clock is employed, which frequency is four times of the selected normal operating frequency. As an instance, if the FSET pin is connected to V_{CC}, the normal switching frequency is set to 300 kHz. The internal high−frequency clock is 1.2 MHz. Figure 28 shows internal clocks of the NCP5215 in this case. The 1.2MHz high−frequency clock with 50% duty−ratio introduced to the two PWM channels. A digital circuitry generates two interleaved 300 kHz clocks using the 1.2 MHz clock and output them to the two PWM channels as normal operation clocks in CCM, respectively.

Forced−PWM Operation (FPWM Mode)

If the FPWM# pin is pulled low, the NCP5215 works under forced−PWM operation and thus always in CCM. The two channels always run in selected fixed frequency and 180° interleaved operation. In this mode, the low−side gate−drive signal is forced to be the complement of the high−side gate−drive signal. This mode allows reverse inductor current, in such a way that it provides more accurate voltage regulation and fast transient response.

During soft−start operation, the NCP5215 automatically runs in FPWM mode regardless of the FPWM# pin's setting to guarantee smooth powerup.

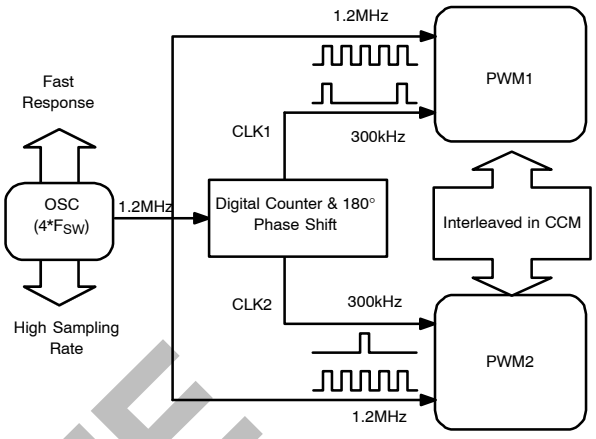

Figure 28. Internal Clocks in the NCP5215 as F_{SW} = 300 kHz

Light−Load Pulse−Skipping Operation (Skip Mode)

If the skip mode is enabled by pulling high FPWM# pin, the NCP5215 works in pulse−skipping enabled operation (PS).

In medium and high load range, the converter still runs in CCM, and the switching frequency is fixed as the selected frequency. If both channels run in CCM, they operate interleaved.

In light load range, the converter will enter skip mode if negative inductor current appears continuously. In the skip mode, the bottom MOSFET will be turned off when the inductor current is going negative. The top MOSFET's on−time is fixed to around 1.5 times as the on−time in CCM. The NCP5215 continuously monitors the voltage at FB pin and comparing to the voltage at VDRP Pin. When the FB voltage drops below the VDRP voltage, a fixed on−time will be initiated at the time of the next coming high−frequency clock edge, which can be either rising edge or falling edge. The minimum off−time is half high−frequency cycle.

When the load increases and the inductor current becomes continuous, the controller will automatically return to fixed−frequency operation and be synchronized to the normal operation clock.

Transient Response Enhancement (TRE)

In the skip mode, the operation of the NCP5215 is similar to constant on−time scheme. The response time of the controller is between half to one cycle of the high−frequency clock. However, for a conventional trailing−edge PWM controller in CCM, the fastest response time is one switching cycle in the worst case. To further improve transient response in CCM, a transient

OBSOLETE
THIS DEVICE IS OBSOLETE
PLEASE CONTACT YOUR ON SEMICONDUCTOR
REPRESENTATIVE FOR INFORMATION

response enhancement circuitry is introduced to the NCP5215.

In CCM operation, the controller continuously monitors the output voltage (COMP) of the error amplifier to detect load transient events. As shown in Figure 1, there is a threshold voltage in each channel made in a way that a filtered COMP signal pluses an adjustable offset voltage, which is set by an external resistor. Once large load transient occurs, the COMP signal is possible to exceed the threshold and then TRE signal will be high in a short period, which is typically around one normal switching cycle. In this short period, the controller will be running at high frequency and therefore has faster response. After that the controller comes back to normal switching frequency operation. Figure 29 shows TRE effect on a load transient response.

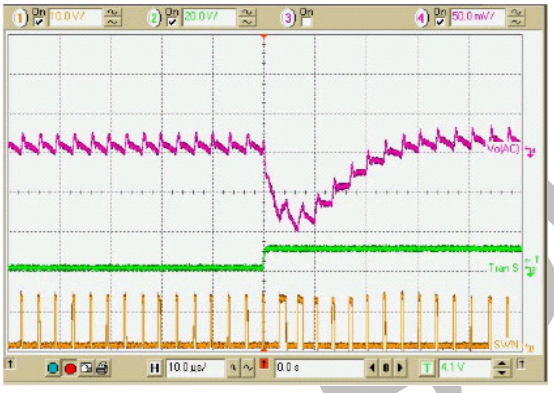

Top: Vo (50mV/div), Middle: Transient signal (20V/div), Bottom: SWN (10V/div), Time: (10us/div)
(a) TRE disabled

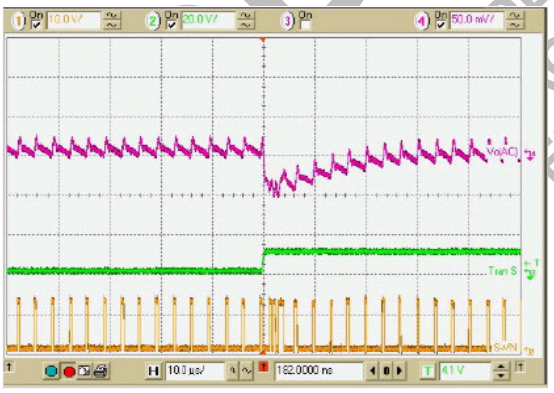

Top: Vo (50mV/div), Middle: Transient signal (20V/div), Bottom: SWN (10V/div), Time: (10us/div)
(b) TRE enabled

Figure 29. Transient Response Comparison on TRE

The internal offset voltage of the TRE threshold is set by an external resistor R_{TRE} connected from the TRESET Pin to AGND.

$$V_{th_TRE} = \frac{I_{TRE} \cdot R_{TRE}}{4} \quad \text{(eq. 1)}$$

where I_{TRE} is a sourcing current out the TRESET pin. A recommended value for V_{th_TRE} is around 1.5 times of peak−to−peak value of the COMP signal in CCM operation. The higher V_{th_TRE}, the lower sensitivity to load transient. The TRE function can be disabled by pulling high the TRESET pin to V_{CC} or just leaving it float.

Adaptive Voltage Positioning (AVP)

For applications with fast transient currents, adaptive voltage positioning can reduce peak−to−peak output voltage deviations due to load transients and allow use of a smaller output filter. Adaptive voltage positioning sets output voltage higher than nominal at light loads, and output voltage is allowed limited sag when the load current is applied. Upon removal of the load, output voltage returns no higher than the original level, allowing one output transient peak to be canceled over a load stepup and release cycle.

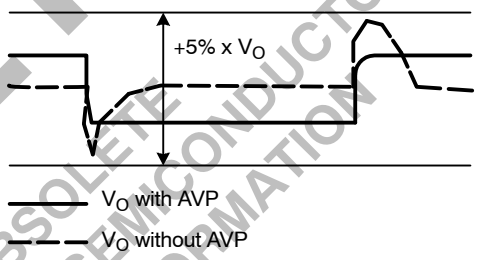

Figure 30. Adaptive Voltage Positioning

Figure 30 shows how AVP works. The waveform labeled “Vo without AVP” shows output voltage waveform in a converter without AVP. On the left, the output voltage sags when the output current is stepped up and later overshoots when current is stepped back down. With AVP, the peak−to−peak excursions are cut around in half. The controller can be configured to adjust the output voltage based on the output current of the converter as shown in Figure 31. In order to realize the AVP function, a resistor is connected between V_{REF} and V_{DRP}. During no−load conditions, the VDRP Pin voltage stays at the same voltage level as the V_{REF}. As the output current increases, the VDRP Pin voltage decreases. This causes V_{OUT} to droop according to a loadline set by the resistor.

In the NCP5215, the output current of each channel is sensed differentially. A high gain and low offset−voltage differential amplifier in each channel allows low−resistance current−sensing resistor or low−DCR inductor to be used to minimize power dissipation. For lossless inductor current sensing as shown in Figure 31, the sensing RC network should satisfy

$$R_{CS} \times C_{CS} = \frac{L}{DCR} \quad \text{(eq. 2)}$$

where DCR is a DC resistance of a inductor, and normally C_{cs} is selected to be around 0.1 μF. In high accuracy

OBSOLETE
THIS DEVICE IS OBSOLETE
CONTACT YOUR ON SEMICONDUCTOR
REPRESENTATIVE FOR INFORMATION

applications, to compensate measurement error caused by temperature, an additional resistance network including a negative−temperature−coefficient (NTC) thermistor can be connected with C_{CS} in parallel.

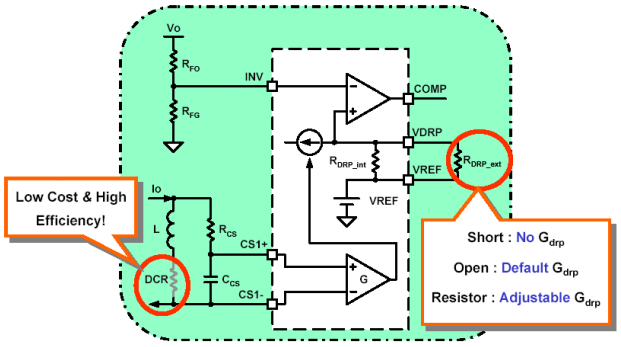

Figure 31. Programmable AVP with Lossless Inductor Current Sensing

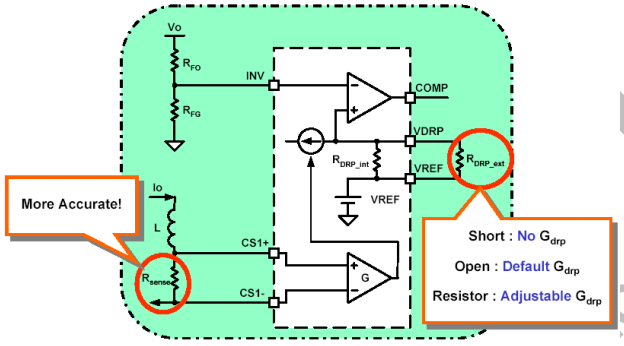

Figure 32. Figure 32. Programmable AVP with Resistive Current Sensing

The output voltage with AVP is

$$V_O = V_{O0} - I_O \cdot R_{LL} \quad \text{(eq. 3)}$$

where I_o is load current, no−load output voltage V_{O0} is set by the external resistor divider, that is

$$V_{O0} = \left(1 + \frac{R_{FO}}{R_{FG}}\right) \cdot V_{REF} \quad \text{(eq. 4)}$$

R_{FO} is a resistor connected between the output and the FB pin, and R_{FG} is a resistor connected between the FB Pin to AGND. The load−line impedance R_{LL} by the AVP function is given by

$$R_{LL} = DCR\ Gain_CS \cdot \frac{R_{DRP_ext}}{R_{DRP_int} + R_{DRP_ext}} \cdot \frac{V_{O0}}{V_{REF}} \quad \text{(eq. 5)}$$

where DCR is DC resistance of the inductor, Gain_CS is a gain from [(CS+)−(CS−)] to (VDRP−VREF), R_{DRP_int} is a internal resistance connected between the output reference and the VDRP Pin, R_{DRP_ext} is a external resistance connected between the output reference and the VDRP pin.

If an additional current sensing resistor (R_{CS}) is employed to improve accuracy, as shown in Figure 32, the load line resistance can be calculated by

$$R_{LL} = R_{CS}\ Gain_CS \cdot \frac{R_{DRP_ext}}{R_{DRP_int} + R_{DRP_ext}} \cdot \frac{V_{O0}}{V_{REF}} \quad \text{(eq. 6)}$$

The AVP function can be easily disabled by shorting VDRP pin and VREF pin together.

Control Logic

The internal control logic is powered by V_{CC}. Figure 33 shows a power−up and powerdown timing diagram for each channel. Figure 34 shows a state diagram for each channel.

The NCP5215 continuously monitors V_{CC} and V_{IN} level with an undervoltage lockout (UVLO) function. If both V_{CC} and V_{IN} are in operation range, and output voltage is below 0.3 V, the converter has a soft−start after ENBL signal goes high. The soft−start time is programmed by an external capacitor C_{SS} connected from the SS Pin to AGND, which can be calculated by

$$t_{SS} = \frac{0.8 \times C_{SS}}{I_{SS}} \quad \text{(eq. 7)}$$

where I_{SS} is a sourcing current output from the SS pin.

When the ENBL goes low, or the internal fault latch is set by over current or output undervoltage, the device operates in soft stop and output discharge mode. The output is discharged to GND through an internal 12 Ω switch connected from the CS−/Vo pin to the PGND Pin, until the output voltage decreases to 0.3 V. Also if restart the system when the output voltage is still above 0.3 V, the device will discharge the output voltage to 0.3 V first and then start soft−start.

Overcurrent Protection (OCP)

The NCP5215 protects power system if overcurrent occurs. The current through each channel is continuously monitored with the differential current sense. Current limit threshold is related to an external voltage at the I_{LIM} pin, which is normally produced by an external resistor divider (R_{il1} and R_{il2}) connected from the V_{REF} pin to AGND. The current−limit threshold for peak current is set by

$$I_{LIM(Peak)} = 0.2 \cdot \frac{R_{il2} \cdot V_{REF}}{(R_{il1} + R_{il2}) \cdot DCR} \quad \text{(eq. 8)}$$

or

$$I_{LIM(Peak)} = 0.2 \cdot \frac{R_{il2} \cdot V_{REF}}{(R_{il1} + R_{il2}) \cdot R_{CS}} \quad \text{(eq. 9)}$$

If inductor current exceeds the current threshold continuously, the top gate drive will be turned off cycle−by−cycle. In the meanwhile, an internal fault timer will be triggered to count normal operation clock. After 16 continuous clock pulses, if the fault still exists the part latches off, both the top gate drive and the bottom gate drive

OBSOLETE
THIS DEVICE IS OBSOLETE
PLEASE CONTACT YOUR ON SEMICONDUCTOR
REPRESENTATIVE FOR INFORMATION

are turned off and their outputs are float. The fault remains set until the system has shutdown and re−applied power or the enable input signal to the regulator controller has toggled states.

Overvoltage Protection (OVP)

An OVP circuit monitors the output voltages to prevent from over voltage. OVP limit is typically 117% of the nominal output voltage level. If the output voltage is above this threshold, an OV fault is set, the top gate drive is turned OFF, and then the bottom gate drive is latched ON to discharge the output. The fault remains set until the system has shutdown and re−applied power or the enable input signal to the regulator controller has toggled states.

Undervoltage Protection (UVP)

A UVP circuit monitors the output voltages to detect undervoltage. UVP limit is 68% of the nominal output voltage level. If the output voltage is below this threshold, a UV fault is set. If an OV protection is set before, the bottom gate drive is forced high. If no OV protection set, an internal fault timer will be triggered to count normal operation clock. After 16 continuous clock pulses, if the fault still exists the part latches off, both the top gate drive and the bottom gate drive are turned off and their outputs are float. The fault remains set until the system has shutdown and re−applied power or the enable input signal to the regulator controller has toggled states.

Thermal Protection

The NCP5215 has a thermal shutdown protection to protect the device from overheating when the die temperature exceeds 150°C. Once the thermal protection is triggered, the fault state can be ended by re−applying V_{CC}, V_{IN}, or ENBL when the temperature drops down below 120°C.

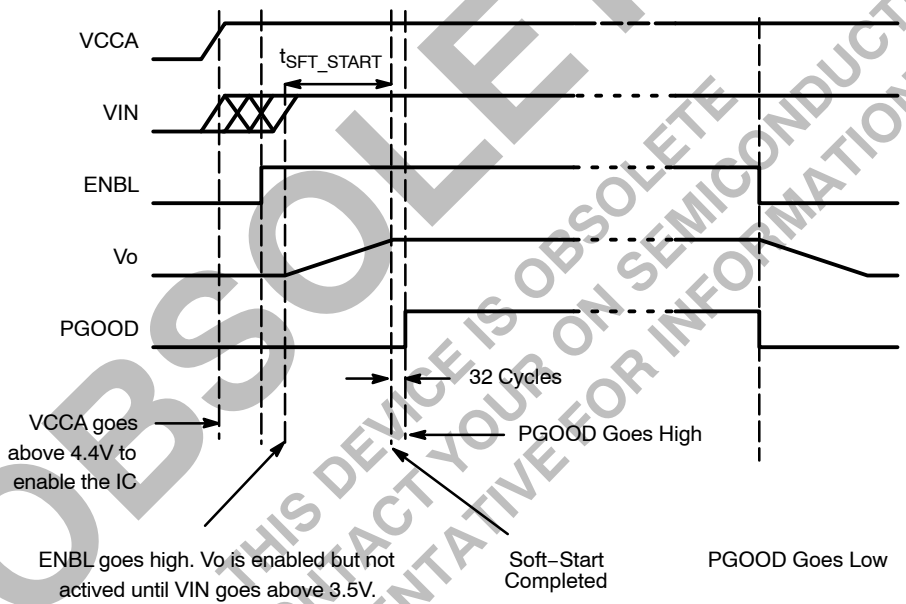

Figure 33. Powerup and Powerdown Timing Diagram per Channel

OBSOLETE
THIS DEVICE IS OBSOLETE
PLEASE CONTACT YOUR ON SEMICONDUCTOR
REPRESENTATIVE FOR INFORMATION

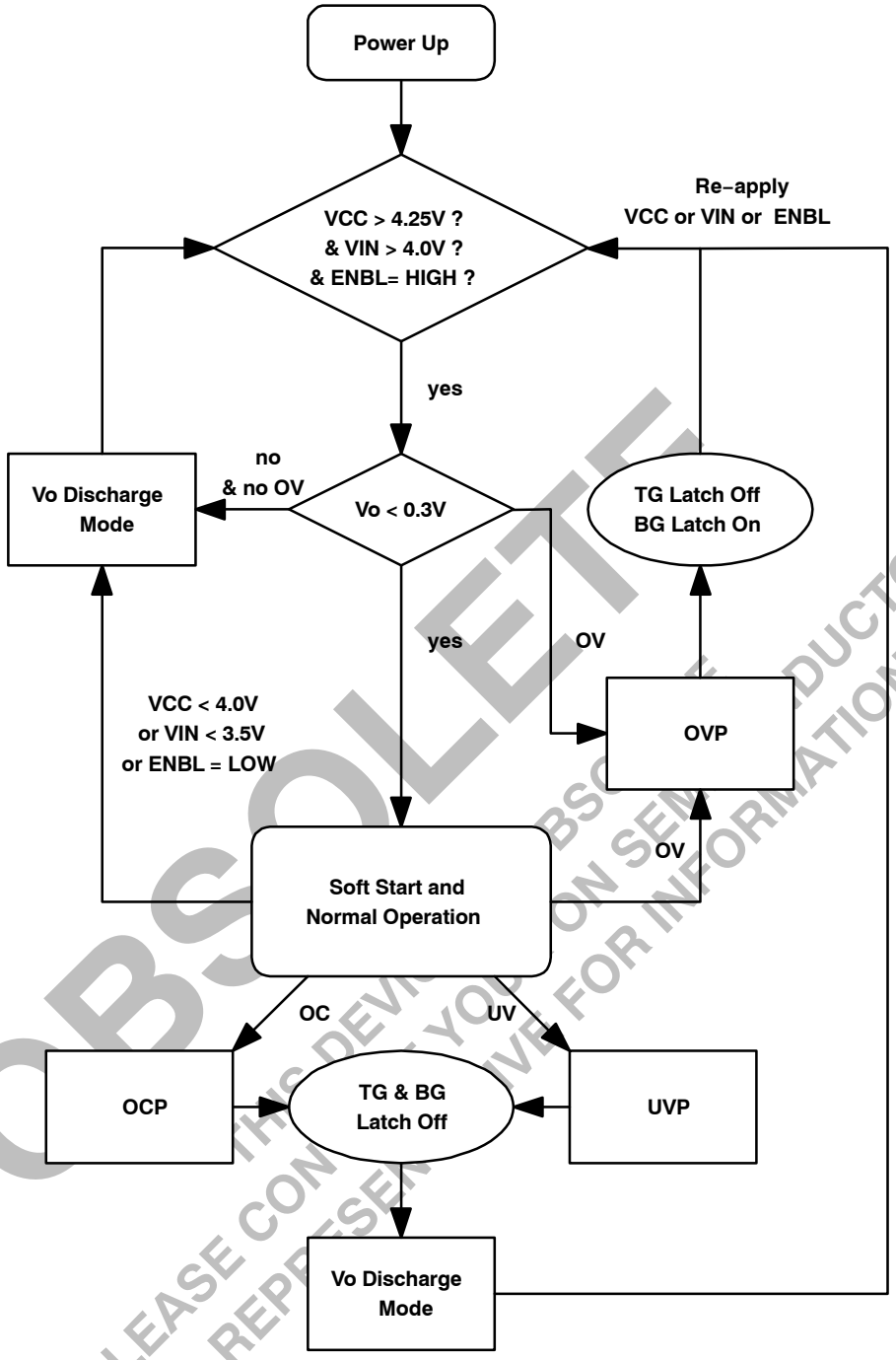

OBSOLETE
PLEASE CONTACT YOUR ON SEMICONDUCTOR REPRESENTATIVE FOR INFORMATION

Figure 34. State Diagram per Channel

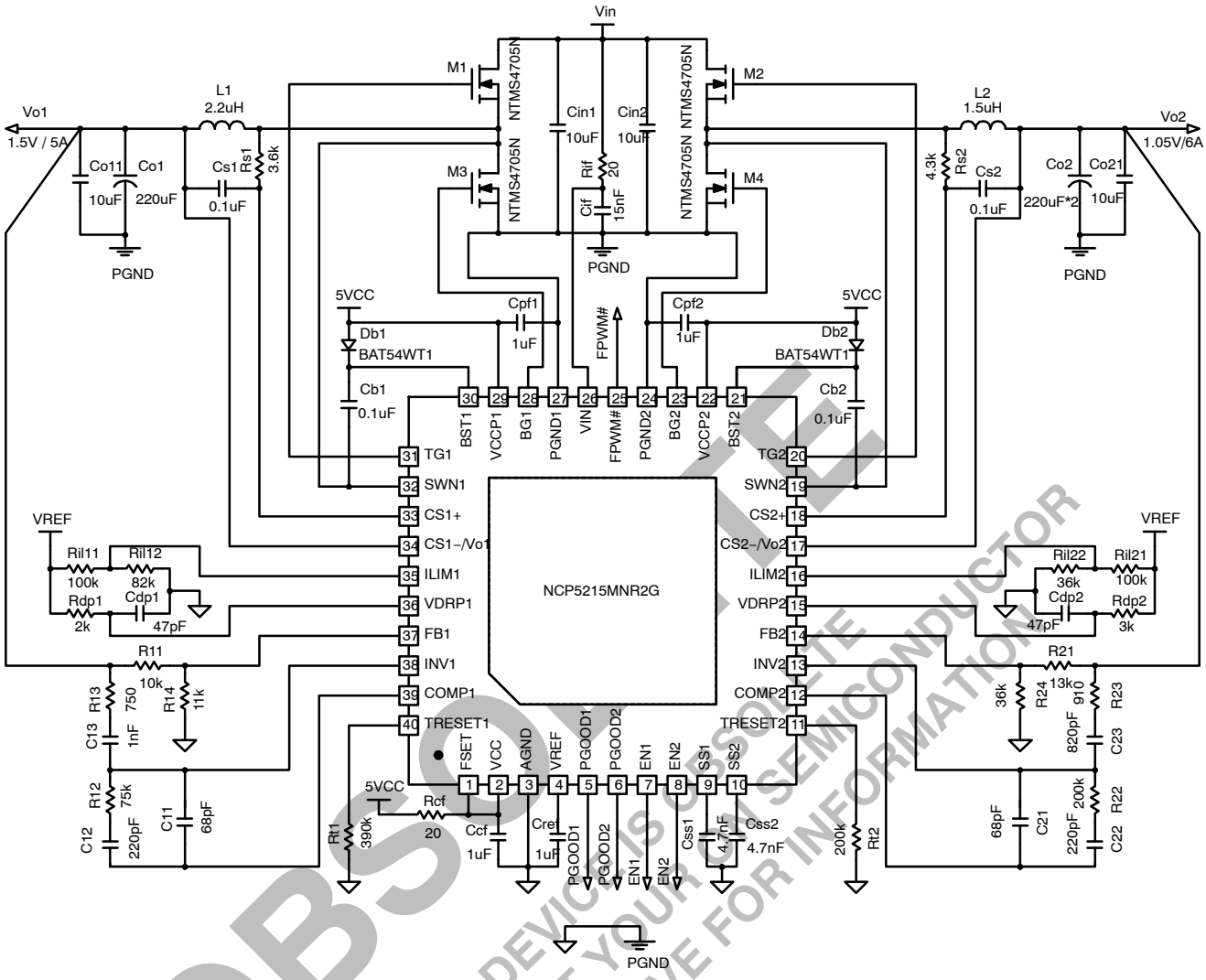

Figure 35. Typical Application Schematic Diagram

OBSOLETE
THIS DEVICE IS OBSOLETE
PLEASE CONTACT YOUR ON SEMICONDUCTOR
REPRESENTATIVE FOR INFORMATION

Table 2. BILL OF MATERIALS FOR THE TYPICAL APPLICATION

Item	PCS	Part Reference	Description	Value	Package	Part Number	Manufacturer
1	1	IC1	NCP5215		QFN40	NCP5215MNR2G	ON Semiconductor
2	4	M1, M2, M3, M4	Power MOSFET 30 V, 12 A, Single N−Channel SO−8		SO8	NTMS4705N	ON Semiconductor
3	2	Db1, Db2	Schottky Diode, 30V		SC70	BAT54WT1G	ON Semiconductor
4	2	Cdp1, Cdp2	MLCC Cap 50V, ±5%, Char: COG	47pF	0603	ECJ1VB1H470J	Panasonic
						C1608C0G1H470J	TDK
5	2	C11, C22	MLCC Cap 50V, ±5%, Char: COG	68pF	0603	ECJ1VB1H680J	Panasonic
						C1608C0G1H680J	TDK
6	2	C12, C22	MLCC Cap 50V, ±5%, Char: COG	220pF	0603	ECJ1VC1H221J	Panasonic
						C1608C0G1H221J	TDK
7	1	C23	MLCC Cap 50V, ±5%, Char: COG	820pF	0603	ECJ1VC1H821J	Panasonic
						C1608C0G1H821J	TDK
8	1	C13	MLCC Cap 50V, ±5%, Char: COG	1000pF	0603	ECJ1VC1H102J	Panasonic
						C1608C0G1H102J	TDK
9	2	CSS1, CSS2	MLCC Cap 50V, ±10%, Char: X7R	4700pF	0603	ECJ1VB1H472K	Panasonic
						C1608X7R1H472K	TDK
10	1	CIF	MLCC Cap 50V, ±10%, Char: X7R	15nF	0603	ECJ1VB1H153K	Panasonic
						C1608X7R1H153K	TDK
11	4	Cb1, Cb2, Cs1, Cs2	MLCC Cap 16V, ±10%, Char: X7R	0.1μF	0603	ECJ1VB1C104K	Panasonic
						C1608X7R1H104K	TDK
12	4	Ccf, Cpf1, Cpf2, Cref	MLCC Cap 25V, ±10%, Char: X5R	1μF	0805	ECJ2FB1E105K	Panasonic
						C3216X5R1H105K	TDK
13	2	Co11, Co21	MLCC Cap 10V, ±20%, Char: X7R	10μF	0805	ECJ3YB1C106M	Panasonic
						C3216X7R1C106M	TDK
14	2	CIN1, CIN2	MLCC Cap 25V, ±20%, Char: X7R	10μF	1812	C4532X7R1E106M	TDK
15	3	Co1, Co2 (x2)	SP−Cap/Polymer Aluminum Capacitors, 22 μF, 2 V, ESR = 12 mΩ	220μF	7343	EEFUD0D221XR	Panasonic
16	2	Rcf, Rif	Thick Film Chip Resistors, Power Rating 0.1W, Tol: ±1%	20Ω	0603	ERJ3EKF20R0V	Panasonic
17	1	R13	Thick Film Chip Resistors, Power Rating 0.1W, Tol: ±1%	750Ω	0603	ERJ3EKF7500V	Panasonic
18	1	R23	Thick Film Chip Resistors, Power Rating 0.1W, Tol: ±1%	910Ω	0603	ERJ3EKF9100V	Panasonic
19	1	Rdp1	Thick Film Chip Resistors, Power Rating 0.1W, Tol: ±1%	2kΩ	0603	ERJ3EKF2001V	Panasonic
20	1	Rdp2	Thick Film Chip Resistors, Power Rating 0.1W, Tol: ±1%	3kΩ	0603	ERJ3EKF3001V	Panasonic
21	1	RS1	Thick Film Chip Resistors, Power Rating 0.1W, Tol: ±1%	3.6kΩ	0603	ERJ3EKF3601V	Panasonic
22	1	RS2	Thick Film Chip Resistors, Power Rating 0.1W, Tol: ±1%	4.3kΩ	0603	ERJ3EKF4301V	Panasonic
23	1	R11	Thick Film Chip Resistors, Power Rating 0.1W, Tol: ±1%	10kΩ	0603	ERJ3EKF1002V	Panasonic

OBSOLETE
PLEASE CONTACT YOUR ON SEMICONDUCTOR REPRESENTATIVE FOR INFORMATION
THIS DEVICE IS OBSOLETE

Item	PCS	Part Reference	Description	Value	Package	Part Number	Manufacturer
24	1	R14	Thick Film Chip Resistors, Power Rating 0.1W, Tol: ±1%	11kΩ	0603	ERJ3EKF1102V	Panasonic
25	1	R21	Thick Film Chip Resistors, Power Rating 0.1W, Tol: ±1%	13kΩ	0603	ERJ3EKF1302V	Panasonic
26	2	R24, Ril22	Thick Film Chip Resistors, Power Rating 0.1W, Tol: ±1%	36kΩ	0603	ERJ3EKF3602V	Panasonic
27	1	R12	Thick Film Chip Resistors, Power Rating 0.1W, Tol: ±1%	75kΩ	0603	ERJ3EKF7502V	Panasonic
28	1	Ril12	Thick Film Chip Resistors, Power Rating 0.1W, Tol: ±1%	82kΩ	0603	ERJ3EKF8202V	Panasonic
29	2	Ril11, Ril21	Thick Film Chip Resistors, Power Rating 0.1W, Tol: ±1%	100kΩ	0603	ERJ3EKF1003V	Panasonic
30	2	R22, Rt2	Thick Film Chip Resistors, Power Rating 0.1W, Tol: ±1%	200kΩ	0603	ERJ3EKF2003V	Panasonic
31	1	Rt1	Thick Film Chip Resistors, Power Rating 0.1W, Tol: ±1%	390kΩ	0603	ERJ3EKF3903V	Panasonic
32	1	L1	Power Choke Coil, DCR = 7.0mΩ, IDC = 12A, ISAT = 27A	2.2μH		PCMC104T−2R2MN	Cyntec
33	1	L2	Power Choke Coil, DCR = 4.2mΩ, IDC = 16A, ISAT = 33A	1.5μH		PCMC104T−1R5MN	Cyntec

OBSOLETE
THIS DEVICE IS OBSOLETE
PLEASE CONTACT YOUR ON SEMICONDUCTOR
REPRESENTATIVE FOR INFORMATION

PACKAGE DIMENSIONS

QFN40 6x6, 0.5P
MN SUFFIX
CASE 488AR−01
ISSUE A

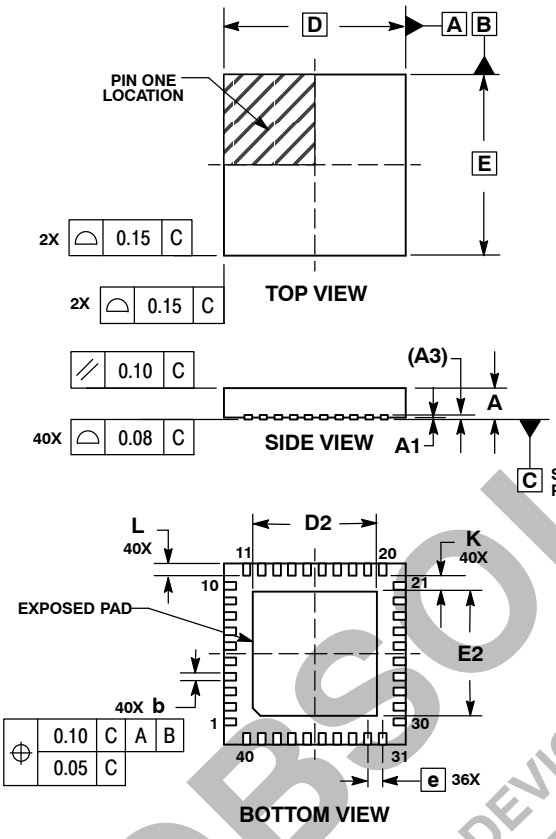

NOTES:
1. DIMENSIONING AND TOLERANCING PER ASME Y14.5M, 1994.
2. CONTROLLING DIMENSIONS: MILLIMETERS.
3. DIMENSION b APPLIES TO PLATED TERMINAL AND IS MEASURED BETWEEN 0.25 AND 0.30mm FROM TERMINAL
4. COPLANARITY APPLIES TO THE EXPOSED PAD AS WELL AS THE TERMINALS.

	MILLIMETERS	
DIM	MIN	MAX
A	0.80	1.00
A1	0.00	0.05
A3	0.20 REF	
b	0.18	0.30
D	6.00 BSC	
D2	4.00	4.20
E	6.00 BSC	
E2	4.00	4.20
e	0.50 BSC	
L	0.30	0.50
K	0.20	---

SOLDERING FOOTPRINT*

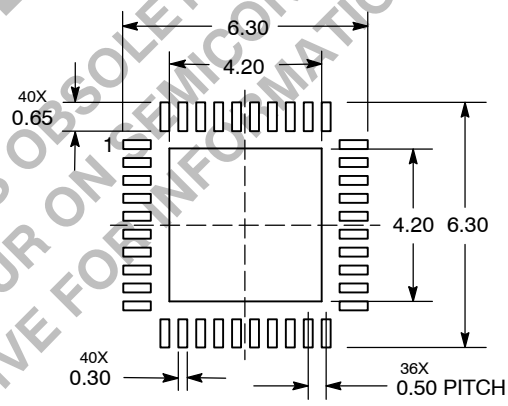

DIMENSIONS: MILLIMETERS

*For additional information on our Pb−Free strategy and soldering details, please download the ON Semiconductor Soldering and Mounting Techniques Reference Manual, SOLDERRM/D.

OBSOLETE
THIS DEVICE IS OBSOLETE
PLEASE CONTACT YOUR ON SEMICONDUCTOR
REPRESENTATIVE FOR INFORMATION

ON Semiconductor and ON are registered trademarks of Semiconductor Components Industries, LLC (SCILLC). SCILLC reserves the right to make changes without further notice to any products herein. SCILLC makes no warranty, representation or guarantee regarding the suitability of its products for any particular purpose, nor does SCILLC assume any liability arising out of the application or use of any product or circuit, and specifically disclaims any and all liability, including without limitation special, consequential or incidental damages. "Typical" parameters which may be provided in SCILLC data sheets and/or specifications can and do vary in different applications and actual performance may vary over time. All operating parameters, including "Typicals" must be validated for each customer application by customer's technical experts. SCILLC does not convey any license under its patent rights nor the rights of others. SCILLC products are not designed, intended, or authorized for use as components in systems intended for surgical implant into the body, or other applications intended to support or sustain life, or for any other application in which the failure of the SCILLC product could create a situation where personal injury or death may occur. Should Buyer purchase or use SCILLC products for any such unintended or unauthorized application, Buyer shall indemnify and hold SCILLC and its officers, employees, subsidiaries, affiliates, and distributors harmless against all claims, costs, damages, and expenses, and reasonable attorney fees arising out of, directly or indirectly, any claim of personal injury or death associated with such unintended or unauthorized use, even if such claim alleges that SCILLC was negligent regarding the design or manufacture of the part. SCILLC is an Equal Opportunity/Affirmative Action Employer. This literature is subject to all applicable copyright laws and is not for resale in any manner.

PUBLICATION ORDERING INFORMATION

LITERATURE FULFILLMENT:
Literature Distribution Center for ON Semiconductor
P.O. Box 5163, Denver, Colorado 80217 USA
Phone: 303−675−2175 or 800−344−3860 Toll Free USA/Canada
Fax: 303−675−2176 or 800−344−3867 Toll Free USA/Canada
Email: orderlit@onsemi.com

N. American Technical Support: 800−282−9855 Toll Free USA/Canada
Europe, Middle East and Africa Technical Support:
Phone: 421 33 790 2910
Japan Customer Focus Center
Phone: 81−3−5773−3850

ON Semiconductor Website: **www.onsemi.com**

Order Literature: http://www.onsemi.com/orderlit

For additional information, please contact your loca
Sales Representative